Peters de Laet
859 SW 24th St.,
Troutdale, OR 97060
Tel: 503-661-5088
Fax: 503-661-5328
www.pdel.com
oemsales@pdel.com

DELPHI

Driving Tomorrow's Technology

World Headquarters and Customer Center
Mail Code 483.400.306
5725 Delphi Drive
Troy, Michigan 48098-2815
U.S.A.
Tel: [1] 248.813.2334
Fax: [1] 248.813.2333

Asia Pacific Regional Headquarters
No. 60, Yuan Guo Road
Anting, Jia Ding District
Shanghai, 201814
Peoples Republic of China
Tel: [86] 21.5956.3300
Fax: [86] 21.6957.3797

European Regional Headquarters
Customer Technology Center
Vorm Eichholz 1
42119 Wuppertal
Germany
Tel: [49] 202.291.0
Fax: [49] 202.291.2777

South American Regional Headquarters
Rodovia dos Tamoios, Km 21,8
Jambeiro – SP 12270-000
Brazil
Tel: [55] 12.3978.2020
Fax: [55] 12.3978.2077

delphi.com

Global Connection Systems Catalog

DELPHI

Global Connection Systems Catalog

DELPHI

Printed on Recycled Paper ©2006 Delphi. All rights reserved. DP-06-E-165 1006/GrxROB/10m

About Delphi. Multi-national Delphi conducts its business operations through various subsidiaries and has headquarters in Troy, Michigan, USA, Paris, Tokyo and São Paulo, Brazil.

Peters de Laet
503-661-5088 – phone 503-661-5328 – fax
www.pdel.com

Peters de Laet
859 SW 24th St.,
Troutdale, OR 97060
Tel: 503-661-5088
Fax: 503-661-5328
www.pdel.com
oemsales@pdel.com

As a global leader in vehicle electrical and electronic connection systems, Delphi offers full-service integration — designing, engineering and manufacturing a comprehensive line of high-quality and innovative connection products and systems.

Delphi
Global Connection Systems Catalog

Delphi Connection Systems is proud to introduce the latest edition of the Global Connection Systems Catalog. To assist you in clear product selection, we provide two selection guides.

The "**Product Family Selection Guide**" (pages *1.6* and *1.7*) serves as an overview of the different product families and their major design features. This will assist you in determining which product family best suits your needs.

The "**Product Family Features Guide**" (pages *1.8* and *1.9*) identifies specific functional attributes and descriptions associated with each product family.

The remainder of the catalog is divided by section according to product family. Each section has its own sidebar tab with product name for quick reference. Within each section, two pages depict a typical connection system family and associated technical information. To help you select a complete connection system, each section depicts all of the individual components required to form complete systems. Each complete connection system is pictured in the orientation in which it is assembled and includes not only major component dimensions but overall mated lengths.

Listed below is contact information for Delphi's **Customer Center** to help you with product ordering or additional information. In addition, Delphi's regional headquarters' contact information is listed on the back cover.

DELPHI

World Headquarters & Customer Center
Mail Code 483.400.301
5725 Delphi Drive
Troy, Michigan 48098-2815 U.S.A.
Tel: [1] 248.813.2334
Fax: [1] 248.813.2333

This 2006 Global Connection Systems Catalog contains information and application guidelines for a representative sample of the available Delphi products. These products are subjected to extensive mechanical, electrical, and environmental testing procedures to assure superior quality and performance.

We have made every effort to ensure that the information contained in this document is accurate; however, changes are often made to update our specifications, part numbers, or introduce new product families. An application or sales engineer can help you determine which product best suits your application guidelines. Our global engineering, manufacturing network, and distribution capabilities are available to help you select the most suitable product.

We recommend that you use this catalog as a guide only. For additional part numbers and specifications contact your sales account manager or call your regional support representative at the number listed on the back cover.

Specifications subject to change without notice.

Peters de Laet
503-661-5088 – phone 503-661-5328 – fax
www.pdel.com

Peters de Laet
859 SW 24th St
Troutdale, OR 97060
Tel: 503-661-5088
Fax:503-661-5328
www.pdel.com
oemsales@pdel.com

GT Series features tangless terminals and one of the lowest connector engage forces in the industry. Designed for both 1.50 and 2.80mm applications, GT also offers unsealed female USCAR footprint compliant versions.

Metri-Pack is a family of electrical connection systems which utilizes internationally standardized male blade sizes, allowing for flexibility in design. Blade widths range from 1.5 mm to 8 mm with maximum current ratings of 14 to 60 amps.

Micro-Pack Series electronic connectors are designed to meet the needs of low energy, high density applications.

064 Series unsealed header connectors and mating components meet USCAR design guidelines and interface footprints.

Ducon Series utilizes two-piece terminals that provide superior mechanical and electrical performance in a complete range of terminal sizes.

Table of Contents

Introduction *i.1*
Product Family Selection Guide *i.6*
Product Family Features *i.8*

1. GT Series
150 . . . . . 1.2
280 . . . . . 1.14
Mixed 1.24
Lever Locks 1.32

2. Metri-Pack Series
150 . . . . . 2.2
280 . . . . . 2.23
480 . . . . . 2.41
630 . . . . . 2.51
800 . . . . . 2.61
Mixed 2.67
Junction 2.79
Headers 2.97

3. Micro-Pack Series
100 In-Line 3.2
100 Header 3.8
100W Header 3.24

4. 064 Header Series
Overview 4.2
064 Unsealed Header 4.8
Mixed Unsealed Header 4.48
Mating Components 4.50

5. Ducon Series
0.8 . . . . . 5.2
1.5 . . . . . 5.6
2.8 . . . . . 5.10
4.8 . . . . . 5.14
6.3 . . . . . 5.16
Mixed 5.20
Door Connectors 5.24

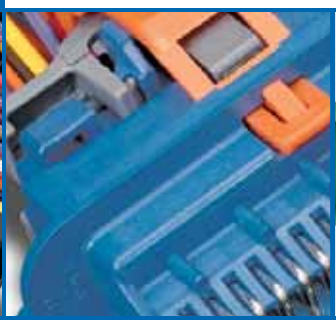
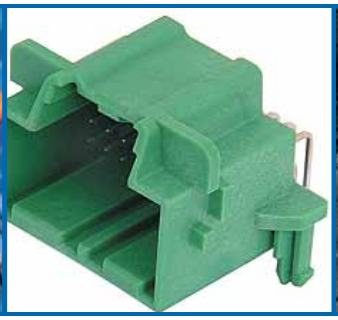

6. Special Products
Lamp Sockets 6.2
Splice Savers 6.10
Weather-Pack 6.16
VF Connections 6.22
DS Connections 6.26

7. Electrical Centers
Modular 7.2
Traditional 7.16
Device Connections 7.26

8. Temperature Sensors 8.1

9. Supplemental Products
Ring Terminals 9.2
Battery/Heavy Duty Terminals 9.4
Cable Seals and Cavity Plugs 9.8
56 Series Device Connections 9.10
Clips 9.13
Connector Carriers 9.16

10. Application Tooling 10.1

Glossary 11.1
Index 11.2

Special Products offer comprehensive and diverse product lines ranging from lamp sockets to device connections, featuring sophisticated connection systems technology.

Electrical Centers provide a centralized location for electrical power and signal distribution and its associated circuit protection – combining fuses, relays and interconnects.

Temperature Sensors are offered in a variety of vehicle applications to meet OEM specifications.

Supplemental Products are a broad selection of product lines that utilize state-of-the-art crimp, interface and sealing technologies, along with clips and connector carriers to provide positive positioning of components.

Application Tooling features automatic and hand tool terminal application systems, including presses, dies, and various popular hand tools.

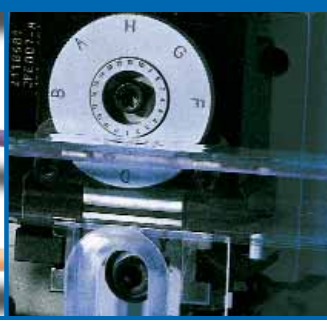

Peters de Laet
503-661-5088 – phone 503-661-5328 – fax
www.pdel.com

Experience

Delphi Connection Systems is a world leader in supplying vehicle power and signal distribution systems, with an unsurpassed reputation in the design, development, and manufacture of electrical and electronic connection systems and devices.

For more than 100 years, Delphi has been at the forefront of delivering advanced technologies to the vehicle and its occupants. We have a long history of automotive achievement including many industry firsts, from environmental issues to vehicle performance and safety.

Our innovative products exceed the most strenuous performance requirements and provide solid value to our customers. That kind of customer focus helps us work toward even greater product performance and *driving tomorrow's technology*.

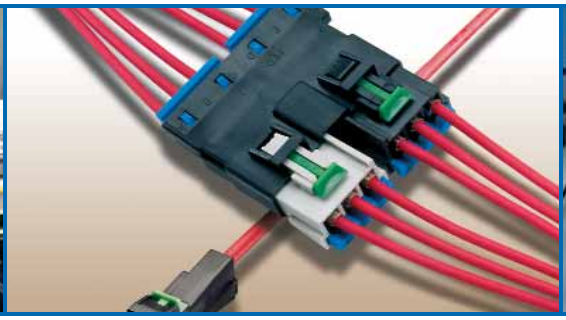

Peters de Laet
503-661-5088 – phone 503-661-5328 – fax
www.pdel.com

Our Strength

With a worldwide workforce, Delphi provides both the advanced technical skills and hands-on logistical support to be a quality supplier of electrical and electronic systems architecture, and connection systems.

We work to develop partnerships with our customers to clearly identify their requirements and exceed their expectations. Our global teams are thorough, responsive, and customer-focused.

Our key is a global communication network linking all of our employees. By leveraging our resources and expertise regionally, we bring the solutions right to your door—wherever you may be.

DELPHI

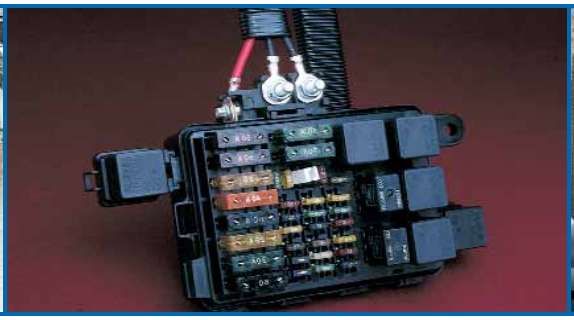

http://connectors.delphi.com

Peters de Laet
503-661-5088 – phone 503-661-5328 – fax
www.pdel.com

Product Family Selection Guide

	GT Series	GT Lever Lock	Metri-Pack	Junction Systems	Metri-Pack Headers	Micro-Pack	064 Series	Ducon Series
Unsealed	■	■	■	■	■	■	■	■
Sealed	■	■	■	■	■	■		■
Max. Continuous Current (amps)								
Low	■	■	■	■	■	■	■	■
Medium	■	■	■	■	■			■
High			■					■
Tangless Terminals	■	■	▲		▲	▲	■	
Secondary Terminal Lock or Primary Lock Reinforcement	■	■	■	■	▲	■	■	■
Secondary Connector Lock	■	■	▲		▲	▲	■	
In-Line Connections	■	■	■	■		▲		■
Device Connections	■	■	■		■	■	■	■
PC Board Connections					■	■	■	
Mechanical Assist		■	▲	■	▲	▲		▲
Conforms to ISO/ SAE Performance Requirements	■ (USCAR)	■ (USCAR)	■ (USCAR)	■	■	■	■ (USCAR)	■
Conforms to ISO/ SAE Blade Standards	■ (USCAR)	■ (USCAR)	■ (USCAR)	■	■	■ (Pin)	■ (USCAR)	■

■ Available ▲ This feature is available on some systems.

Peters de Laet
503-661-5088 – phone 503-661-5328 – fax
www.pdel.com

Use this as a general guide to find the Product Family to meet your product application needs.
See pages *i.8* and *i.9* for specific product line technical data.

Lamp Sockets	Splice Savers	Weather-Pack	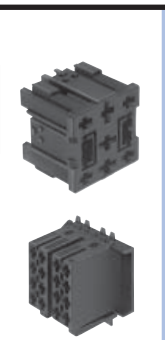 VF Connections	DS Connections	Electrical Centers	Temperature Sensors	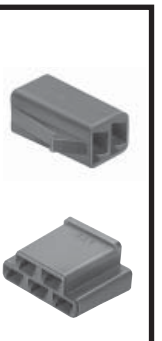 56 Series
■	■		■		■	■	■
■	■	■		■		■	
■	■ ■	■ ■	■ ■ ▲	■ ■	■ ■ ■	■	■ ■ ■
	▲					■	
▲	■	■	■	■	■	■	
		▲				■	
		■					
		■	■	■			■
		▲					
	■	■	■	■	■	■	
	■		■	■	■	■	■

Peters de Laet
503-661-5088 – phone 503-661-5328 – fax
www.pdel.com

Product Family Features

Product Family	Male Terminal Size Width x Thickness (mm)	Maximum Continuous Current* (AMPS)	Cable Range (mm²)	Functional Temperature Range (˚C) -40 to ...	`Low Energy Termination Resistance m@20mV
GT Series					
150 GT (3.5 Centerline)	1.5 x 0.80	15	0.80-0.35 (SAE) 1.0-0.35 (DIN)	125	< 10
150 GT	1.5 x 0.64	15	1.0-0.35	125	< 10
280 GT	2.8 x 0.64	25	5.0-0.35	125	< 10
GT Lever Lock (Mxd)	1.5 x 0.64 2.8 x 0.64	15 - 25	5.0-0.35	125	< 10
Metri-Pack (M/P)					
150.2 M/P Pull-To-Seat	1.5 x 0.80 (Mating Blade)	14	1.0-0.35	125	< 10
280.1 M/P Pull-To-Seat	2.8 x 0.80 (Mating Blade)	30	1.0-0.35	125	< 10
150 M/P	1.5 x 0.80	14	1.0-0.35	125	< 10
280 M/P	2.8 x 0.80	30	5.0-0.35	125	< 10
480 M/P	4.8 x 0.80	42	5.0-0.35	125	< 10
630 M/P	6.3 x 0.80	46	5.0-0.35	125	< 10
MAXI™ Fuse 800 M/P	8.0 x 0.80	60	8.0-2.0	125	< 10
Mixed M/P	1.5, 2.8, 4.8, 6.3 x 0.80	14 - 46	5.0-0.35	125	< 10
Junctions M/P	1.5, 2.8, 4.8, 6.3 x 0.80	14 - 46	5.0-0.35	125	< 10
150 M/P Headers	1.5 x 0.80	14	1.0-0.35	125	< 10
280 M/P Headers	2.8 x 0.80	30	5.0-0.35	125	< 10
Micro-Pack					
100	1.0 Dia.	5	1.0-0.35	85	< 10
100W (Sealed)	1.0 Dia.	7.5	0.80-0.35	125	< 10
064 Series					
Headers	0.64 x 0.64	5 - 7	0.35 - 0.80	85	< 20
MicroHVT	0.64 x 0.64	7	0.35 - 0.80	85	< 20
Micro64	0.64 x 0.64, 0.8 Dia.	5	0.35 - 0.80	85	< 20
Ducon Series					
Ducon 0.8	0.8	15	1.0-0.5	135	< 10
Ducon 1.5	1.5 x 0.8	25	2.5-0.5	135	< 10
Ducon 2.8	2.8 x 0.8	33	2.5-0.5	135	< 10
Ducon 4.8	4.8 x 0.8	45	6.0-0.5	135	< 10
Ducon 6.3	6.3 x 0.8	55	6.0-1.5	135	< 10
Ducon Mixed	1.5 x 0.8 2.8 x 0.8 4.8 x 0.8	15 25 45	2.5-0.5	135	< 10
Weather Pack	Pin and Sleeve	20	3.0-0.35	125	< 10
Splice Savers					
150 GT	1.5 x 0.64	15	1.0-0.35	125	< 10
280 M/P	2.8 x 0.64	25	5.0-0.35	125	< 10
Lamp Sockets	–	4	0.80-0.35	85	–
VF Connections					
VF 2.8	2.8 x 0.80	19	2.5-0.5	125	< 10
VF 6.3	4.8 x 0.80	33	2.5-0.5	135	< 10
DS Connections					
DS 2.8	2.8 x 0.80	19	2.5-0.5	125	< 10
Temperature Sensors	1.5 x 0.80	14	1.0-0.35	125	< 10
56 Series	6.3 x 0.80	49	5.0-0.22	125	< 10

*The test data are based on single circuits in free space and were generated using a "Lumped Resistance" model.

Peters de Laet
503-661-5088 – phone 503-661-5328 – fax
www.pdel.com

Use this as a guide to find the specific product to meet your product application needs.

Voltage Drop mV/amp	Centerline Spacing (mm) Unsealed	Centerline Spacing (mm) Sealed	Connector Material	Female Terminal Material (Plating)	Male Terminal Material (Plating)	Product Family
						GT Series
< 10.0	–	3.5	PA6 10% GF & 20% GB PA66 HS IM, PBT 20% GF	Tin Brass (Tin)	Tin Brass (Tin)	150 GT (3.5 Centerline)
< 10.0	4.0	4.5	PA6 10% GF & 20% GB, PBT 20% GF	Tin Brass (Tin)	Tin Brass (Tin)	150 GT
< 4.0	5.5	6.5	PA6 10% GF & 20% GB, PBT 20% GF	Tin Brass (Tin)	Tin Brass (Tin)	280 GT
See Above	See Above	See Above	PA66 HS IM, PA66 HS IM 14% GF	Tin Brass (Tin)	Tin Brass (Tin)	GT Lever Lock (Mxd.)
						Metri-Pack (M/P)
< 10.0	–	3.5	PA66 HS IM	Silicon Bronze (Tin)	–	150.2 M/P Pull-To-Seat
< 3.0	–	5.0	PA66 HS 33% GF,	Silicon Bronze (Tin)	–	280.1 M/P Pull-To-Seat
< 10.0	3.5	6.0	PA66 HS IM, PA6 PBT, PBT 30% GF	Silicon Bronze (Tin)	Tin Brass (Tin)	150 M/P
< 3.0	5.0	7.7	PA66 HS IM, PA6, PA66 HS IM 14% GF PBT, PBT IM, PBT 30% GF	Tin Brass (Tin)	Tin Brass (Tin)	280 M/P
< 3.0	6.9	9.5	PA66 HS IM, PA66 HS IM 25% GF	Tin Brass (Tin)	Tin Brass (Tin over Copper)	480 M/P
< 3.0	8.5	10.8	PA66 HS IM, PBT 30% GF	Tin Brass (Tin)	Tin Brass (Tin over Copper)	630 M/P
< 3.0	10.3	–	PA66 HS IM, PA6	Tin Brass (Silver Nickel)	Tin Brass (Silver Nickel)	MAXI™ Fuse 800 M/P
See Above	See Above	See Above	See Above	See Above	See Above	Mixed M/P
See Above	See Above	See Above	See Above	See Above	See Above	Junctions M/P
< 10.0	–	4.0	PBT 30% GF, PET 30% GF	Silicon Bronze (Tin)	Brass (Tin)	150 M/P Headers
< 3.0	6.9	–	PA66 HS IM, PBT 30% GF	Tin Brass (Tin)	Copper Alloy (Tin)	280 M/P Headers
						Micro-Pack
< 10.0	3.0	–	PBT, PBT 30% GF, PA66 HS IM	Copper Nickel Alloy (Tin)	Tin Brass (Tin)	100
< 10.0	–	3.5	PBT, PBT 30% GF	Phosphor Bronze (Gold)	Brass Wire (Gold)	100W (Sealed)
						064 Series
< 20.0	2.54	–	PPA GF33 HS, PBT GF30	_	Brass (Tin)	Headers
< 20.0	2.54	–	PBT GF30	Tin Brass (Tin)	–	MicroHVT
< 20.0	2.54	–	PBT GF30	Tin Brass (Tin)	–	Micro64
						Ducon Series
< 4.0	3.0	–	PA6, PA66	Copper Nickel Silicon Alloy (Tin)	Copper Nickel Silicon Alloy (Tin)	Ducon 0.8
< 4.0	4.5	–	PA6	Copper Nickel Silicon Alloy (Tin)	Copper Nickel Silicon Alloy (Tin)	Ducon 1.5
< 4.0	–	6.0	PA6	Copper Nickel Silicon Alloy (Tin)	Copper Nickel Silicon Alloy (Tin)	Ducon 2.8
< 4.0	6.8	–	PA6	Copper Nickel Silicon Alloy (Tin)	Copper Nickel Silicon Alloy (Tin)	Ducon 4.8
< 4.0	–	10.8	PA66	Copper Nickel Silicon Alloy (Tin)	Copper Nickel Silicon Alloy (Tin)	Ducon 6.3
< 4.0	–	6.0, 10.0	PA66	Copper Nickel Silicon Alloy (Tin)	Copper Nickel Silicon Alloy (Tin)	Ducon Mixed
< 3.0	–	7.7	PA6, PA66 HS IM	Tin Brass (Tin)	Tin Brass (Tin)	**Weather Pack**
						Splice Savers
< 10.0	3.4	4.5	PA66 HS IM, PA66 HS IM 14% GF	Tin Brass (Tin)	Tin Brass (Tin)	150 GT
< 5.0	5.0/6.3	–	PA66 HS IM	Tin Brass (Tin)	Tin Brass (Tin)	280 M/P
< 10.0	–	–	PA66 HS IM, PA66 HS IM 14% GF, PA66 HS IM 33% GF, PBT, PC	Tin Brass (Tin)	–	**Lamp Sockets**
						VF Connections
< 4.0	5.0	–	PA66	Tin Brass (Bronze)	Tin Brass (Bronze)	VF 2.8
< 4.0	8.0	–	PA66 15% GF	Tin Brass (Bronze)	Tin Brass (Bronze)	VF 6.3
						DS Connections
< 4.0	–	5.0	PA66 30% GF	Tin Brass (Bronze)	Tin Brass (Bronze)	DS 2.8
< 10.0	3.5	3.5	PBT 30% GF, PA6 10% GF & 20% GB, PEI 30% GF, PA66 33% GF, PA6, PA66 HS IM	Tin Brass (Tin)	Annealed Stainless Steel (Nickel)	**Temperature Sensors**
< 3.0	10.2	–	PA66 HS IM, PP	Brass (Tin)	Brass (Tin)	**56 Series**

Materials are standard for the designated product line, optional materials may be available.

Peters de Laet
503-661-5088 – phone 503-661-5328 – fax
www.pdel.com

Peters de Laet
503-661-5088 – phone 503-661-5328 – fax
www.pdel.com

GT Series

150, 280 & Lever Lock

The GT Connection System features tangless terminals and offers one of the lowest connector engage forces in the industry. Designed for both 1.50 and 2.80mm blade width applications, GT achieves superior electrical performance that meets or exceeds all known customer requirements, including USCAR standards. The unsealed systems are available in cavity variations between 2-way and 16-way. To maintain world class ergonomics, Delphi introduced the GT Lever Lock series. This series provides connector mating forces of less than 50 Newtons for up to 40 terminations per connector.

The sealed GT Connection System utilizes a new two-rib cable seal. This seal is smaller and uses less material than traditional three rib seal designs without impacting performance. The sealed systems are available in cavity variations between 2-way and 16-way. To maintain world class ergonomics, Delphi introduced the sealed GT Lever Lock series. This series provides connector mating forces of less than 50 Newtons for up to 40 terminations per connector.

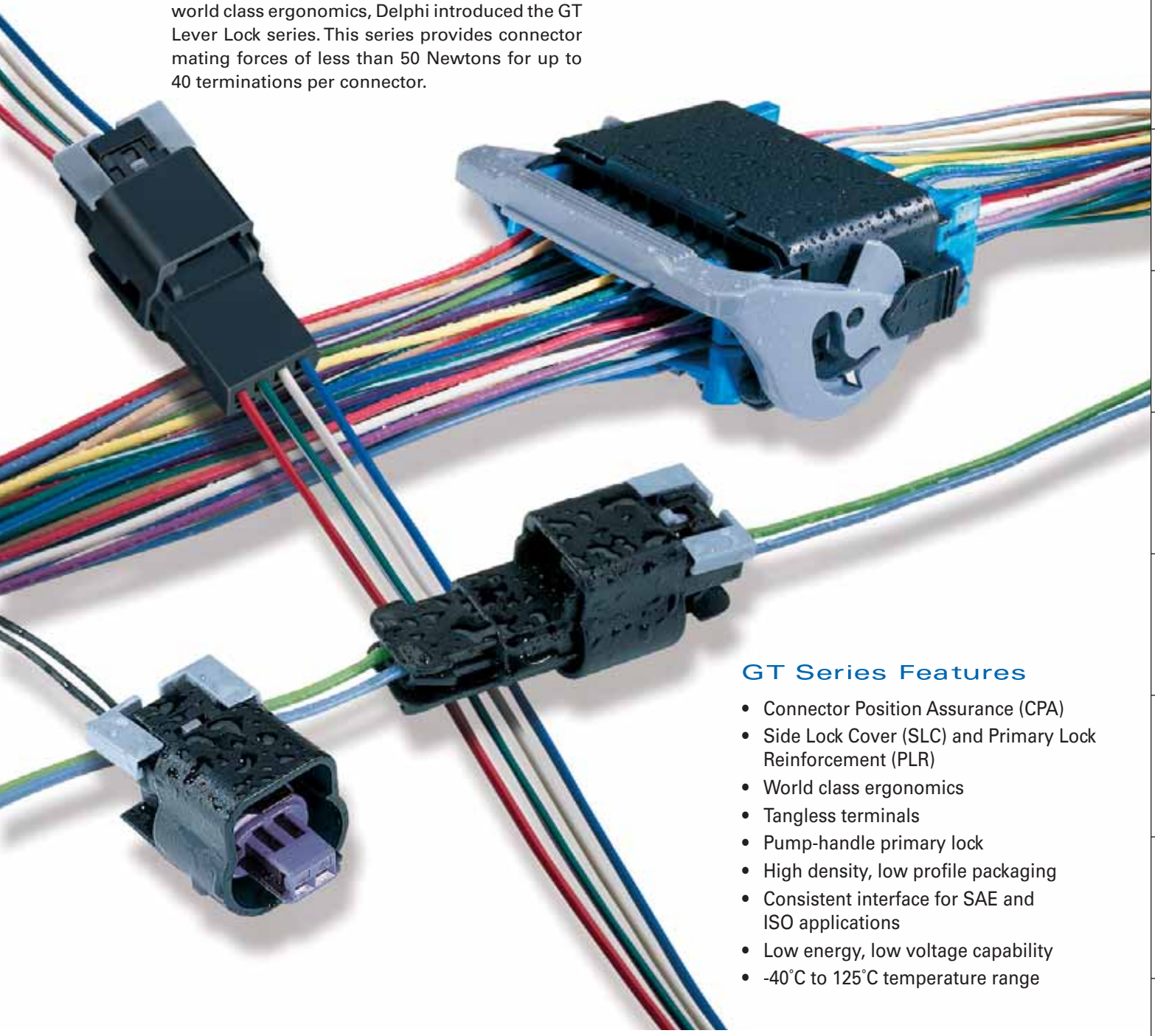

GT Series Features

- Connector Position Assurance (CPA)
- Side Lock Cover (SLC) and Primary Lock Reinforcement (PLR)
- World class ergonomics
- Tangless terminals
- Pump-handle primary lock
- High density, low profile packaging
- Consistent interface for SAE and ISO applications
- Low energy, low voltage capability
- -40˚C to 125˚C temperature range

Peters de Laet
503-661-5088 – phone 503-661-5328 – fax
www.pdel.com

150

Cross Sectional View

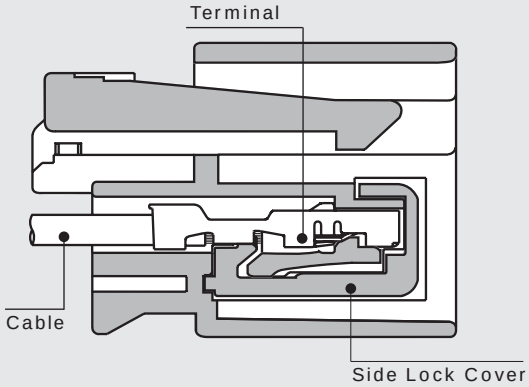

Female Connector Assembly

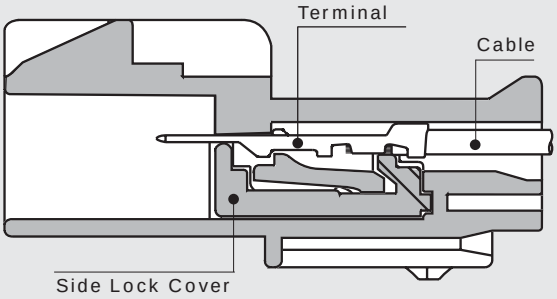

Male Connector Assembly

GT 150 Female Terminals Unsealed

Part #	Cable Range (mm²)	Material	Plating
12191811	0.50-0.35	Tin Brass	Tin
12191812	1.00-0.75	Tin Brass	Tin
13526680*	0.50-0.35	Tin Brass	Tin
13526678*	1.00-0.75	Tin Brass	Tin

*For use with USCAR applications only.

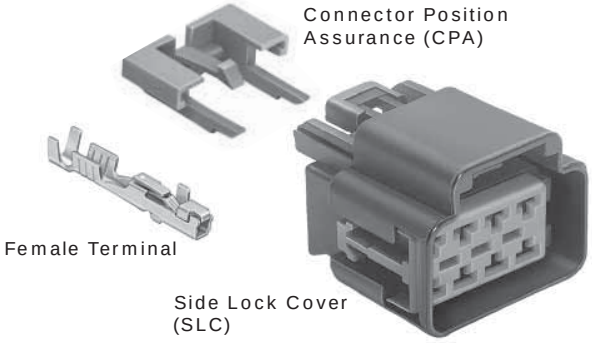

Female Connector Assembly

GT 150 Female Connector Assemblies Unsealed USCAR Footprint

USCAR # *	Delphi Part #	Color	Material
150-U-002-1-A01	13586106	Black	PBT 20% GF
150-U-003-1-A01	13586110	Black	PBT 20% GF
150-U-004-1-A01	13586114	Black	PBT 20% GF
150-U-004-2-A01	13586118	Black	PBT 20% GF
150-U-005-1-A01	13586122	Black	PBT 20% GF
150-U-006-1-A01	13586126	Black	PBT 20% GF
150-U-006-2-A01	13586130	Black	PBT 20% GF
150-U-008-2-A01	13586134	Black	PBT 20% GF
150-U-010-2-A01	13583664	Black	PBT 20% GF
150-U-012-2-A01	13586138	Black	PBT 20% GF
150-U-016-2-A01	13520382	Black	PBT 20% GF

*Other USCAR indexes are also available.

GT 150 Female Connector Assemblies Unsealed

# Cavities	Connector	Color	Material
2	15332129	Black	PA6 10% GF & 20% GB
3	15332132	Black	PA6 10% GF & 20% GB
4	15332135	Black	PA6 10% GF & 20% GB
5	15332138	Black	PA6 10% GF & 20% GB
6	15332141	Black	PA6 10% GF & 20% GB
8	13521472	Black	PBT 20% GF
10	15459918	Black	PBT 20% GF
12	15459912	Black	PBT 20% GF
14	13521476	Black	PBT 20% GF
16	13516905	Black	PBT 20% GF

Side Lock Covers (SLC) are included in the Connector Assemblies listed in this section.

NOTE: Specifications in this catalog are for general reference only and are subject to change without notice. To verify product information, please contact a Delphi representative.

Peters de Laet
503-661-5088 – phone 503-661-5328 – fax
www.pdel.com

150

Unsealed System Application Information

GT 150 Series Terminals – Tin Plated

CABLE RANGE (mm²): 0.35-1.0

CURRENT RANGE (AMPS): 0-15

TEMP RANGE °C: ..... -40 to 125

RESISTANCE: ..... <10mΩ@20mV

VOLTAGE DROP: .... <10.0mV/amp

CENTERLINE SPACING (mm): 4.0

BLADE WIDTH (mm): 1.5

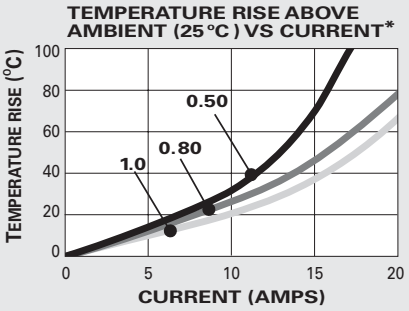

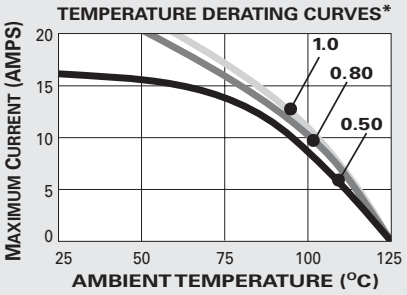

*The test data are based on single circuits in free space and were generated using a "Lumped Resistance" model. This model does not account for all of the variables that would be present in an actual application. For actual product performance, contact your regional support representative.

Male Connector Assembly

GT 150 Male Connector Assemblies Unsealed

# Cavities	Connector	Color	Material
2	15332130	Black	PA6 10% GF & 20% GB
3	15332133	Black	PA6 10% GF & 20% GB
4	15332136	Black	PA6 10% GF & 20% GB
5	15332139	Black	PA6 10% GF & 20% GB
6	15332142	Black	PA6 10% GF & 20% GB
8	13521474	Black	PBT 20% GF
10	15459917	Black	PBT 20% GF
12	15459913	Black	PBT 20% GF
14	13521478	Black	PBT 20% GF
16	13516907	Black	PBT 20% GF

Side Lock Covers (SLC) are included in the Connector Assemblies listed in this section.

GT 150 Male Terminals Unsealed

Part #	Cable Range (mm²)	Material	Plating
15304701	0.50-0.35	Tin Brass	Tin
15304702	1.00-0.75	Tin Brass	Tin

SECTION NOTES:

- Due to rigid tolerances of connector cavities, it is critical to meet all crimp dimensions as specified.

NOTE: Specifications in this catalog are for general reference only and are subject to change without notice. To verify product information, please contact a Delphi representative.

Peters de Laet
503-661-5088 – phone 503-661-5328 – fax
www.pdel.com

150

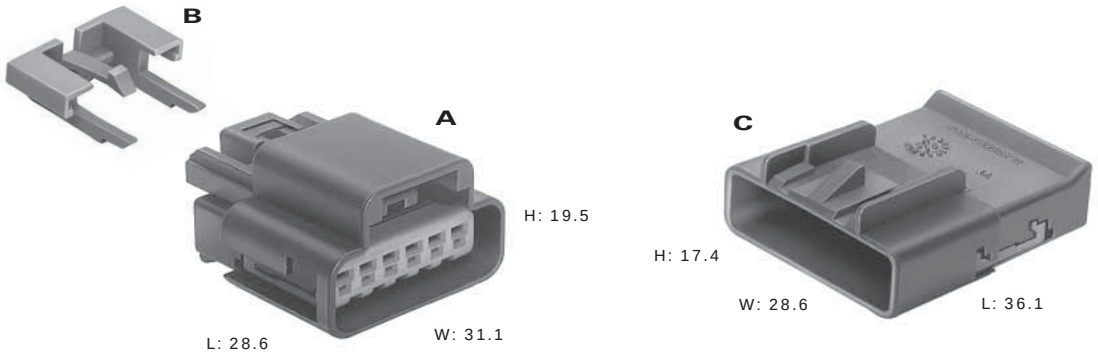

Total Mated Length: 52.1mm

A. Part No: 15332129

Description:	Connector Assembly 2F
Size:	28.6L x 19.5H x 15.1W
Color:	Black
Material:	PA6 10% GF & 20% GB
Terminals:	See Page 1.2

Part No: 15332132

Description:	Connector Assembly 3F
Size:	28.6L x 19.5H x 19.1W
Color:	Black
Material:	PA6 10% GF & 20% GB
Terminals:	See Page 1.2

Part No: 15332135

Description:	Connector Assembly 4F
Size:	28.6L x 19.5H x 23.1W
Color:	Black
Material:	PA6 10% GF & 20% GB
Terminals:	See Page 1.2

Part No: 15332138

Description:	Connector Assembly 5F
Size:	28.6L x 19.5H x 27.1W
Color:	Black
Material:	PA6 10% GF & 20% GB
Terminals:	See Page 1.2

Part No: 15332141

Description:	Connector Assembly 6F
Size:	28.6L x 19.5H x 31.1W
Color:	Black
Material:	PA6 10% GF & 20% GB
Terminals:	See Page 1.2

B. Part No: 15317832

Description:	CPA
Color:	Gray
Material:	PA6 10% GF & 20% GB

C. Part No: 15332130

Description:	Connector Assembly 2M
Size:	36.1L x 17.4H x 12.6W
Color:	Black
Material:	PA6 10% GF & 20% GB
Terminals:	See Page 1.3

Part No: 15332133

Description:	Connector Assembly 3M
Size:	36.1L x 17.4H x 16.6W
Color:	Black
Material:	PA6 10% GF & 20% GB
Terminals:	See Page 1.3

Part No: 15332136

Description:	Connector Assembly 4M
Size:	36.1L x 17.4H x 20.6W
Color:	Black
Material:	PA6 10% GF & 20% GB
Terminals:	See Page 1.3

Part No: 15332139

Description:	Connector Assembly 5M
Size:	36.1L x 17.4H x 24.6W
Color:	Black
Material:	PA6 10% GF & 20% GB
Terminals:	See Page 1.3

Part No: 15332142

Description:	Connector Assembly 6M
Size:	36.1L x 17.4H x 28.6W
Color:	Black
Material:	PA6 10% GF & 20% GB
Terminals:	See Page 1.3

NOTE: Specifications in this catalog are for general reference only and are subject to change without notice. To verify product information, please contact a Delphi representative.

Peters de Laet
503-661-5088 – phone 503-661-5328 – fax
www.pdel.com

150

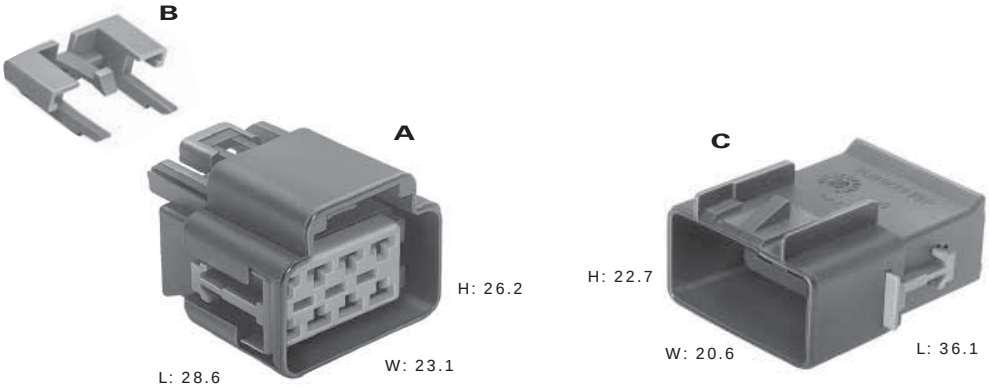

Total Mated Length: 52.1mm

A. Part No: 13521472

Description:	Connector Assembly 8F
Size:	28.6L x 26.2H x 23.1W
Color:	Black
Material:	PBT 20% GF
Terminals:	See Page 1.2

Part No: 15459918

Description:	Connector Assembly 10F
Size:	28.6L x 26.2H x 27.1W
Color:	Black
Material:	PBT 20% GF
Terminals:	See Page 1.2

Part No: 15459912

Description:	Connector Assembly 12F
Size:	28.6L x 26.2H x 31.1W
Color:	Black
Material:	PBT 20% GF
Terminals:	See Page 1.2

Part No: 13521476

Description:	Connector Assembly 14F
Size:	28.6L x 26.2H x 35.1W
Color:	Black
Material:	PBT 20% GF
Terminals:	See Page 1.2

Part No: 13516905

Description:	Connector Assembly 16F
Size:	28.6L x 26.2H x 39.1W
Color:	Black
Material:	PBT 20% GF
Terminals:	See Page 1.2

B. Part No: 15317832

Description:	CPA
Color:	Gray
Material:	PA6 10% GF & 20% GB

C. Part No: 13521474

Description:	Connector Assembly 8M
Size:	36.1L x 22.7H x 20.6W
Color:	Black
Material:	PBT 20% GF
Terminals:	See Page 1.3

Part No: 15459917

Description:	Connector Assembly 10M
Size:	36.1L x 22.7H x 24.6W
Color:	Black
Material:	PBT 20% GF
Terminals:	See Page 1.3

Part No: 15459913

Description:	Connector Assembly 12M
Size:	36.1L x 22.7H x 28.6W
Color:	Black
Material:	PBT 20% GF
Terminals:	See Page 1.3

Part No: 13521478

Description:	Connector Assembly 14M
Size:	36.1L x 22.7H x 32.6W
Color:	Black
Material:	PBT 20% GF
Terminals:	See Page 1.3

Part No: 13516907

Description:	Connector Assembly 16M
Size:	36.1L x 22.7H x 36.6W
Color:	Black
Material:	PBT 20% GF
Terminals:	See Page 1.3

NOTE: Specifications in this catalog are for general reference only and are subject to change without notice. To verify product information, please contact a Delphi representative.

Peters de Laet
503-661-5088 – phone 503-661-5328 – fax
www.pdel.com

150

Cross Sectional View

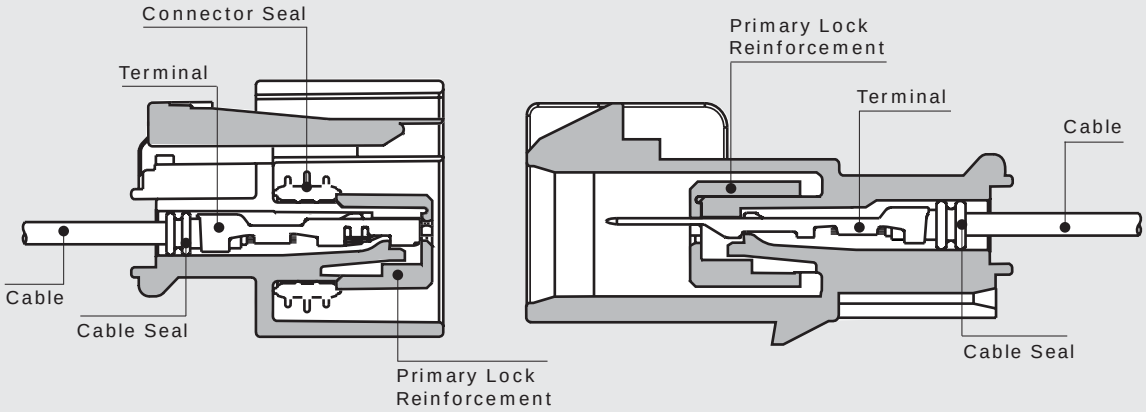

Female Connector Assembly **Male Connector Assembly**

GT 150 Female Terminals Sealed

Part #	Cable Range (mm²)	Material	Plating
12191818	0.50-0.35	Tin Brass	Tin
12191819	1.00-0.75	Tin Brass	Tin

GT 150 Cable Seals

Reel Part #	Loose Part #	Cable Diameter	Material	Color
12191152	15366021	1.20-1.90	Silicone	White
12191153	15366060	1.86-2.40	Silicone	Blue

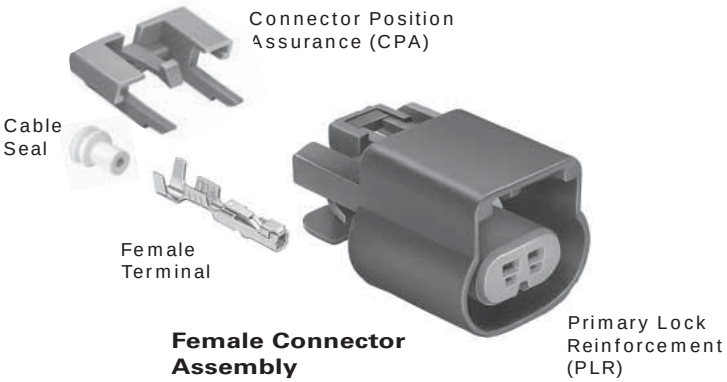

Female Connector Assembly

GT 150 Female Connector Assemblies Sealed USCAR Footprint

USCAR # *	Delphi Part #	Color	Material
150-S-002-1-A01	15497399	Black	PBT 20% GF
150-S-002-1-A02	13542790	Natural	PBT 20% GF
150-S-002-1-A04	15355317	Black	PBT 20% GF
150-S-003-1-A01	13511131	Black	PBT 20% GF
150-S-003-1-A02	13511134	Black	PBT 20% GF
150-S-003-1-A04	15355370	Black	PA6 10% GF & 20% GB
150-S-003-2-A04	13512092	Black	PBT 20% GF
150-S-004-1-A01	15466325	Black	PBT 20% GF
150-S-004-1-A02	15355331	Black	PBT 20% GF
150-S-005-1-A02	15326389 †	Black	PA66 HS IM
150-S-006-1-A02	15336013	Black	PBT 20% GF
150-S-006-2-A01	15460171	Black	PBT 20% GF

*Other USCAR indexes are also available.

† Applications mating to EGR valves may require gold plated female terminals.

GT 150 Female Connector Assemblies Sealed

# Cavities	Connector	Color	Material
2	13510085	Black	PBT 20% GF
3	13519047	Black	PBT 20% GF
4	15487756	Black	PBT 20% GF
5	13519051	Black	PBT 20% GF
6	15397577	Black	PBT 20% GF
8	15326835	Black	PA6 10% GF & 20% GB
10	15326842	Black	PA6 10% GF & 20% GB
12	13530777	Black	PBT 20% GF
14	15326856	Black	PA6 10% GF & 20% GB
16	15326863	Black	PA6 10% GF & 20% GB

Primary Lock Reinforcement (PLR) and Connector Seals are included in the Connector Assemblies listed in this section.

NOTE: Specifications in this catalog are for general reference only and are subject to change without notice. To verify product information, please contact a Delphi representative.

Peters de Laet
503-661-5088 – phone 503-661-5328 – fax
www.pdel.com

150

Sealed System Application Information

GT 150 Series Terminals – Tin Plated

CABLE RANGE (mm²): 0.35-1.0

CURRENT RANGE (AMPS): 0-15

TEMP RANGE °C: ..... -40 to 125

RESISTANCE: ..... <10mΩ@20mV

VOLTAGE DROP: .... <10.0mV/amp

CENTERLINE SPACING (mm): 4.5

BLADE WIDTH (mm): 1.5

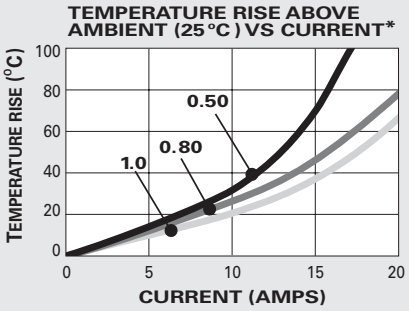

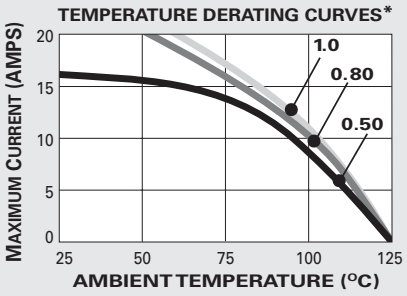

*The test data are based on single circuits in free space and were generated using a "Lumped Resistance" model. This model does not account for all of the variables that would be present in an actual application. For actual product performance, contact your regional support representative.

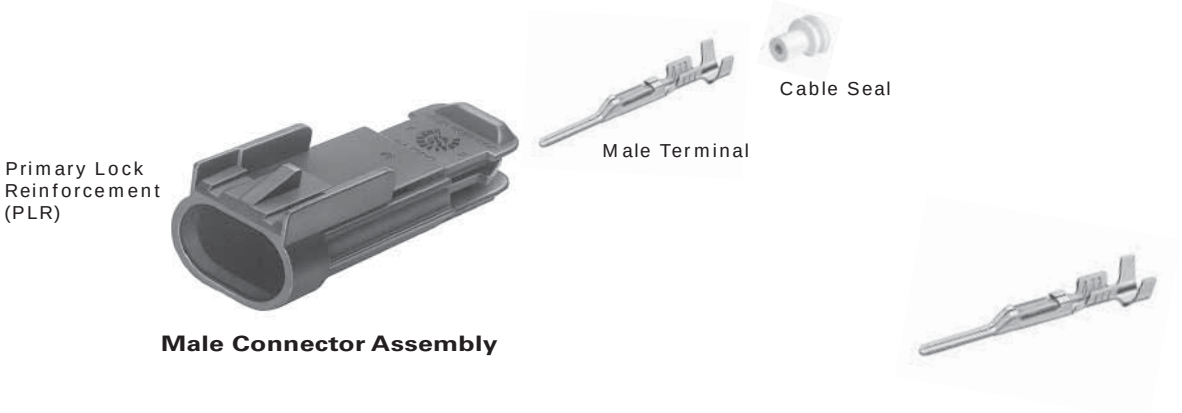

GT 150 Male Connector Assemblies Sealed

# Cavities	Connector	Color	Material
2	13510099	Black	PBT 20% GF
3	13519049	Black	PBT 20% GF
4	15487755	Black	PBT 20% GF
5	13519053	Black	PBT 20% GF
6	15397579	Black	PBT 20% GF
8	15326840	Black	PA6 10% GF & 20% GB
10	15326847	Black	PA6 10% GF & 20% GB
12	15326854	Black	PA6 10% GF & 20% GB
14	15326861	Black	PA6 10% GF & 20% GB
16	15326868	Black	PA6 10% GF & 20% GB

Primary Lock Reinforcement (PLR) is included in the Connector Assemblies listed in this section.

GT 150 Male Terminals Sealed

Part #	Cable Range (mm²)	Material	Plating
15326268	0.50-0.35	Tin Brass	Tin
15326269	1.00-0.75	Tin Brass	Tin

GT 150 Cavity Plug*

Part #	Cavity Diameter	Material	Color
15305171	4.0mm	Silicone	Green

* Cavity plugs seal unused female and male cavities.

SECTION NOTES:

- Due to rigid tolerances of connector cavities, it is critical to meet all crimp dimensions as specified.

NOTE: Specifications in this catalog are for general reference only and are subject to change without notice. To verify product information, please contact a Delphi representative.

Peters de Laet
503-661-5088 – phone 503-661-5328 – fax
www.pdel.com

150

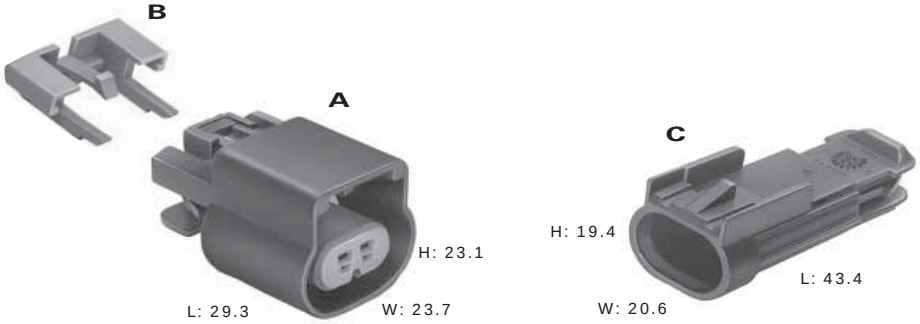

Total Mated Length: 56.7mm

A. Part No: 13510085

Description:	Connector Assembly 2F
Size:	29.3L x 23.1H x 23.7W
Color:	Black
Material:	PBT 20% GF
Terminals:	See Page 1.6
Seals/Plugs:	See Page 1.6, 1.7

Part No: 13519047

Description:	Connector Assembly 3F
Size:	29.3L x 23.1H x 28.2W
Color:	Black
Material:	PBT 20% GF
Terminals:	See Page 1.6
Seals/Plugs:	See Page 1.6, 1.7

Part No: 15487756

Description:	Connector Assembly 4F
Size:	29.3L x 23.1H x 32.7W
Color:	Black
Material:	PBT 20% GF
Terminals:	See Page 1.6
Seals/Plugs:	See Page 1.6, 1.7

Part No: 13519051

Description:	Connector Assembly 5F
Size:	29.3L x 23.1H x 37.2W
Color:	Black
Material:	PBT 20% GF
Terminals:	See Page 1.6
Seals/Plugs:	See Page 1.6, 1.7

Part No: 15397577

Description:	Connector Assembly 6F
Size:	29.3L x 23.1H x 41.7W
Color:	Black
Material:	PBT 20% GF
Terminals:	See Page 1.6
Seals/Plugs:	See Page 1.6, 1.7

B. Part No: 15317832

Description:	CPA
Color:	Gray
Material:	PA6 10% GF & 20% GB

C. Part No: 13510099

Description:	Connector Assembly 2M
Size:	43.4L x 19.4H x 20.6W
Color:	Black
Material:	PBT 20% GF
Terminals:	See Page 1.7
Seals/Plugs:	See Page 1.6, 1.7

Part No: 13519049

Description:	Connector Assembly 3M
Size:	43.4L x 19.4H x 25.1W
Color:	Black
Material:	PBT 20% GF
Terminals:	See Page 1.7
Seals/Plugs:	See Page 1.6, 1.7

Part No: 15487755

Description:	Connector Assembly 4M
Size:	43.4L x 19.4H x 29.6W
Color:	Black
Material:	PBT 20% GF
Terminals:	See Page 1.7
Seals/Plugs:	See Page 1.6, 1.7

Part No: 13519053

Description:	Connector Assembly 5M
Size:	43.4L x 19.4H x 34.1W
Color:	Black
Material:	PBT 20% GF
Terminals:	See Page 1.7
Seals/Plugs:	See Page 1.6, 1.7

Part No: 15397579

Description:	Connector Assembly 6M
Size:	43.4L x 19.4H x 38.6W
Color:	Black
Material:	PBT 20% GF
Terminals:	See Page 1.7
Seals/Plugs:	See Page 1.6, 1.7

NOTE: Specifications in this catalog are for general reference only and are subject to change without notice. To verify product information, please contact a Delphi representative.

Peters de Laet
503-661-5088 – phone 503-661-5328 – fax
www.pdel.com

150

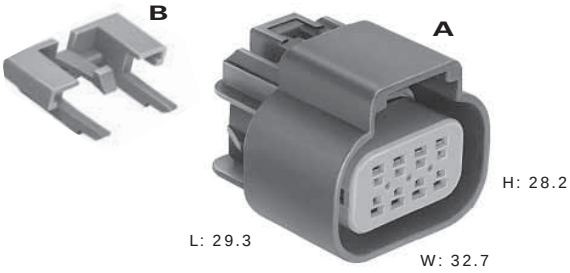

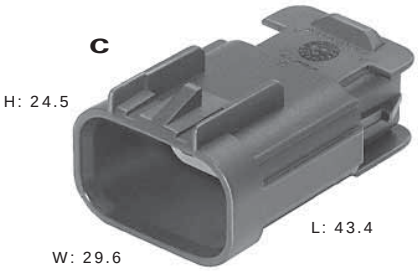

Total Mated Length: 56.7mm

A. Part No: 15326835

Description:	Connector Assembly 8F
Size:	29.3L x 28.2H x 32.7W
Color:	Black
Material:	PA6 10% GF & 20% GB
Terminals:	See Page 1.6
Seals/Plugs:	See Page 1.6, 1.7

Part No: 15326842

Description:	Connector Assembly 10F
Size:	29.3L x 28.2H x 37.2W
Color:	Black
Material:	PA6 10% GF & 20% GB
Terminals:	See Page 1.6
Seals/Plugs:	See Page 1.6, 1.7

Part No: 13530777

Description:	Connector Assembly 12F
Size:	29.3L x 28.2H x 41.7W
Color:	Black
Material:	PBT 20% GF
Terminals:	See Page 1.6
Seals/Plugs:	See Page 1.6, 1.7

Part No: 15326856

Description:	Connector Assembly 14F
Size:	29.3L x 28.2H x 46.2W
Color:	Black
Material:	PA6 10% GF & 20% GB
Terminals:	See Page 1.6
Seals/Plugs:	See Page 1.6, 1.7

Part No: 15326863

Description:	Connector Assembly 16F
Size:	29.3L x 28.2H x 50.7W
Color:	Black
Material:	PA6 10% GF & 20% GB
Terminals:	See Page 1.6
Seals/Plugs:	See Page 1.6, 1.7

B. Part No: 15317832

Description:	CPA
Color:	Gray
Material:	PA6 10% GF & 20% GB

C. Part No: 15326840

Description:	Connector Assembly 8M
Size:	43.4L x 24.5H x 29.6W
Color:	Black
Material:	PA6 10% GF & 20% GB
Terminals:	See Page 1.7
Seals/Plugs:	See Page 1.6, 1.7

Part No: 15326847

Description:	Connector Assembly 10M
Size:	43.4L x 24.5H x 34.1W
Color:	Black
Material:	PA6 10% GF & 20% GB
Terminals:	See Page 1.7
Seals/Plugs:	See Page 1.6, 1.7

Part No: 15326854

Description:	Connector Assembly 12M
Size:	43.4L x 24.5H x 38.6W
Color:	Black
Material:	PA6 10% GF & 20% GB
Terminals:	See Page 1.7
Seals/Plugs:	See Page 1.6, 1.7

Part No: 15326861

Description:	Connector Assembly 14M
Size:	43.4L x 24.5H x 43.1W
Color:	Black
Material:	PA6 10% GF & 20% GB
Terminals:	See Page 1.7
Seals/Plugs:	See Page 1.6, 1.7

Part No: 15326868

Description:	Connector Assembly 16M
Size:	43.4L x 24.5H x 47.6W
Color:	Black
Material:	PA6 10% GF & 20% GB
Terminals:	See Page 1.7
Seals/Plugs:	See Page 1.6, 1.7

NOTE: Specifications in this catalog are for general reference only and are subject to change without notice. To verify product information, please contact a Delphi representative.

Peters de Laet
503-661-5088 – phone 503-661-5328 – fax
www.pdel.com

150 3.5mm Centerline Pull-to-Seat Replacement

Sealed System Application Information

CABLE RANGE (mm²): 0.35-1.0

CURRENT RANGE (AMPS): 0-15

TEMP RANGE °C: ..... -40 to 125

RESISTANCE: ..... <10mΩ@20mV

VOLTAGE DROP: .... <10.0mV/amp

CENTERLINE SPACING (mm): 3.5

BLADE WIDTH (mm): 1.5

GT 150 Series Terminals – Tin Plated

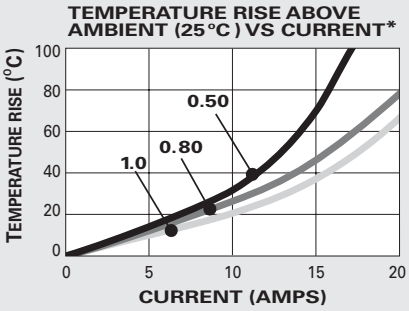

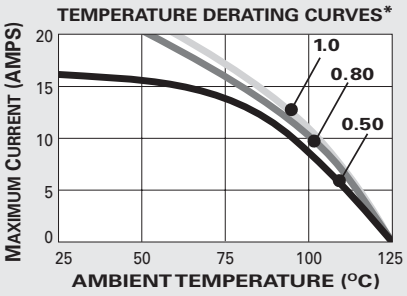

*The test data are based on single circuits in free space and were generated using a "Lumped Resistance" model. This model does not account for all of the variables that would be present in an actual application. For actual product performance, contact your regional support representative.

GT 150 Female Terminals Sealed

Part #	Cable Range (mm²)	Material	Plating
15326266	0.50-0.35	Tin Brass	Tin
15326267	1.00*-0.75	Tin Brass	Tin

* Accommodates 1.00 European Ultra Thin Wall Cable.
Accommodates 0.80 SAE Ultra Thin Wall Cable.

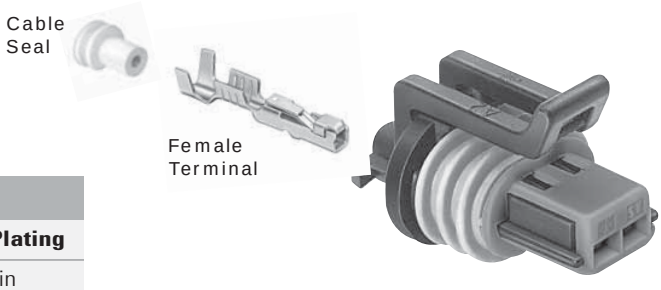

Unshrouded Female Connector Assembly

GT 150 Cable Seals

Reel Part #	Loose Part #	Cable Diameter	Material	Color
12191155	15366022	1.47-1.85	Silicone	Green
—	15305351	1.70-2.10	Silicone	Yellow

GT 150 Cavity Plug*

Part #	Material	Color
15305169	Silicone	Orange

* Cavity plugs seal unused female and male cavities.

GT 150 Female Unshrouded Connector Assemblies Sealed

# Cavities	Conn. Asm.	Indexing	Color	Material
2	15449028	Mushroom	Black	PBT 20% GF
2 TBI	15336027	Mushroom	Black	PA6 10% GF & 20% GB
3	15491547	Mushroom	Black	PBT 20% GF
4	15410728	Mushroom	Black	PBT 20% GF

NOTE: Specifications in this catalog are for general reference only and are subject to change without notice. To verify product information, please contact a Delphi representative.

Peters de Laet
503-661-5088 – phone 503-661-5328 – fax
www.pdel.com

150 3.5mm Centerline Pull-to-Seat Replacement

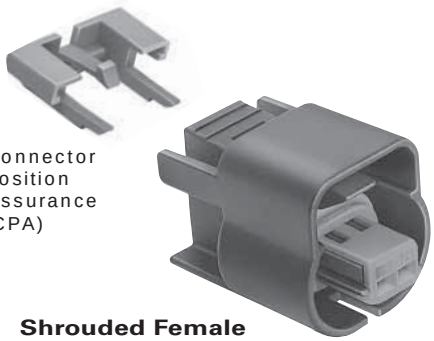

Shrouded Female Connector Assembly

GT 150 Female Shrouded Connector Assemblies Sealed

# Cavities	Conn. Asm.	Indexing	Color	Material
2	15336004	Mushroom	Black	PA6 10% GF & 20% GB
2	15355317	Mushroom	Black	PBT 20% GF
3	15336121	Mushroom	Black	PA66 HS IM
3	15355323	Mushroom	Black	PBT 20% GF
4	15326559	Mushroom	Black	PA66 HS IM
4	15355331	Mushroom	Black	PBT 20% GF
5	15326389†	Mushroom	Black	PA66 HS IM
5	15355268	Mushroom	Black	PBT 20% GF
6	15336013	Mushroom	Black	PBT 20% GF
2	15335987	Key	Black	PA6 10% GF & 20% GB
2	15355319	Key	Black	PBT 20% GF
3	15326556	Key	Black	PA66 HS IM
3	15355325	Key	Black	PBT 20% GF
4	15336001	Key	Black	PA66 HS IM
4	15355329	Key	Black	PBT 20% GF

† Applications mating to EGR valves may require gold plated female terminals.

A

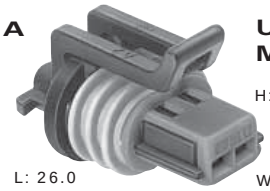

Unshrouded Female Mushroom Indexed

A. Part No: 15449028

Description:	Connector Assembly 2F
Size:	26.0L x 18.5H x 17.0W
Color:	Black
Material:	PBT 20% GF
Terminals:	See Page 1.10
Seals/Plugs:	See Page 1.10

Part No: 15336027

Description:	TBI Connector Assembly 2F
Size:	26.0L x 11.0H x 20.5W
Color:	Black
Material:	PA6 10% GF & 20% GB
Terminals:	See Page 1.10
Seals/Plugs:	See Page 1.10
Note:	Mates to Throttle Body Injector.

Part No: 15491547

Description:	Connector Assembly 3F
Size:	26.0L x 18.5H x 20.5W
Color:	Black
Material:	PBT 20% GF
Terminals:	See Page 1.10
Seals/Plugs:	See Page 1.10

Part No: 15410728

Description:	Connector Assembly 4F
Size:	26.0L x 18.5H x 24.0W
Color:	Black
Material:	PBT 20% GF
Terminals:	See Page 1.10
Seals/Plugs:	See Page 1.10

GT Connector Assembly/Metri-Pack Pull-to-Seat Replacement Cross Reference

GT Conn. Assembly	Description	Metri-Pack Pull-To-Seat
15449028	Connector Assembly 2F	12162193, 12162194, 12162195
15336027 TBI	Connector Assembly 2F	12162204, 12162206, 12162208, 12162215, 12162216, 12162217, 12162218
15491547	Connector Assembly 3F	12162182, 12162183, 12162184, 12162185, 12162186, 12162279
15410728	Connector Assembly 4F	12124846, 12129192, 12162188, 12162189, 12162190, 12162191

NOTE: Specifications in this catalog are for general reference only and are subject to change without notice. To verify product information, please contact a Delphi representative.

Peters de Laet
503-661-5088 – phone 503-661-5328 – fax
www.pdel.com

150 3.5mm Centerline Pull-to-Seat Replacement

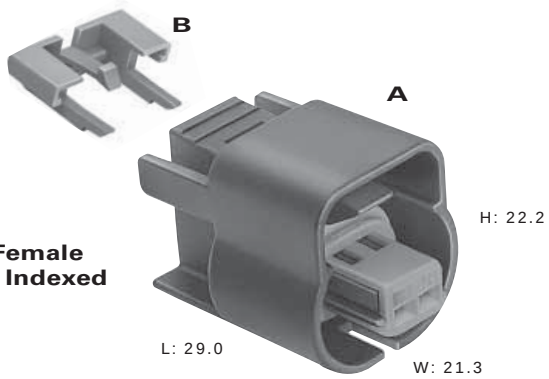

Shrouded Female Mushroom Indexed

A. Part No: 15336004*

Description:	Connector Assembly 2F
Size:	29.0L x 22.2H x 21.3W
Color:	Black
Material:	PA6 10% GF & 20% GB
Terminals:	See Page 1.10
Seals/Plugs:	See Page 1.10

Part No: 15336121*

Description:	Connector Assembly 3F
Size:	29.0L x 22.2H x 24.8W
Color:	Black
Material:	PA66 HS IM
Terminals:	See Page 1.10
Seals/plugs:	See Page 1.10

Part No: 15326559*

Description:	Connector Assembly 4F
Size:	29.0L x 22.2H x 28.3W
Color:	Black
Material:	PA66 HS IM
Terminals:	See Page 1.10
Seals/Plugs:	See Page 1.10

Part No: 15326389*†

Description:	Connector Assembly 5F
Size:	29.0L x 22.2H x 31.8W
Color:	Black
Material:	PA66 HS IM
Terminals:	See Page 1.10
Seals/Plugs:	See Page 1.10

Part No: 15336013*

Description:	Connector Assembly 6F
Size:	29.0L x 22.2H x 35.3W
Color:	Black
Material:	PBT 20% GF
Terminals:	See Page 1.10
Seals/Plugs:	See Page 1.10

B. Part No: 15317832

Description:	CPA
Color:	Gray
Material:	PA6 10% GF & 20% GB

*See Page 1.11 for alternative material

† Applications mating to EGR valves may require gold plated female terminals.

GT Connector Assembly/Metri-Pack Pull-to-Seat Replacement Cross Reference

GT Connector Assembly	Description	Metri-Pack Pull-To-Seat
15336004, 15355317	Connector Assembly 2F	12162193, 12162194, 12162195
15336121, 15355323	Connector Assembly 3F	12162182, 12162183, 12162184, 12162185, 12162186
15326559, 15355331	Connector Assembly 4F	12124846, 12129192, 12162188, 12162189, 12162190, 12162191
15326389†, 15355268	Connector Assembly 5F	12162825, 12162826, 12162827
15336013, 15397577	Connector Assembly 6F	12066317, 12162210, 12162260, 12162261, 12162262

NOTE: Specifications in this catalog are for general reference only and are subject to change without notice. To verify product information, please contact a Delphi representative.

Peters de Laet
503-661-5088 – phone 503-661-5328 – fax
www.pdel.com

150 3.5mm Centerline Pull-to-Seat Replacement

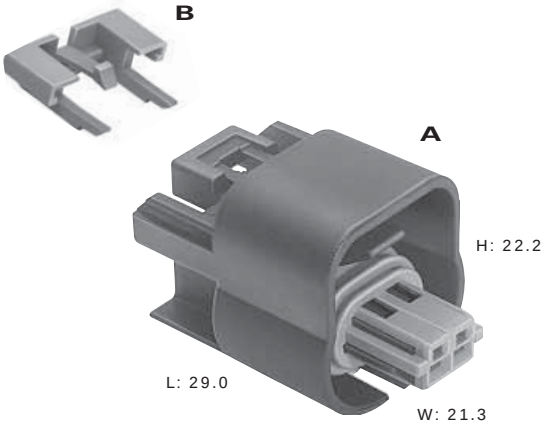

Shrouded Female Key Indexed

A. Part No: 15335987*

Description:	Connector Assembly 2F
Size:	29.0L x 22.2H x 21.3W
Color:	Black
Material:	PA6 10% GF & 20% GB
Terminals:	See Page 1.10
Seals/Plugs:	See Page 1.10

Part No: 15326556*

Description:	Connector Assembly 3F
Size:	29.0L x 22.2H x 24.8W
Color:	Black
Material:	PA66 HS IM
Terminals:	See Page 1.10
Seals/Plugs:	See Page 1.10

Part No: 15336001*

Description:	Connector Assembly 4F
Size:	29.0L x 22.2H x 28.3W
Color:	Black
Material:	PA66 HS IM
Terminals:	See Page 1.10
Seals/Plugs:	See Page 1.10

B. Part No: 15317832

Description:	CPA
Color:	Gray
Material:	PA6 10% GF & 20% GB

*See Page 1.11 for alternative material

GT Connector Assembly/Metri-Pack Pull-to-Seat Replacement Cross Reference

GT Connector Assembly	Description	Metri-Pack Pull-To-Seat
15335987, 15355319	Connector Assembly 2F	12162197, 12162198, 12162199
15326556, 15355325	Connector Assembly 3F	12162278, 12162279, 12162280
15336001, 15355329	Connector Assembly 4F	12162833, 12162834

NOTE: Specifications in this catalog are for general reference only and are subject to change without notice. To verify product information, please contact a Delphi representative.

Peters de Laet
503-661-5088 – phone 503-661-5328 – fax
www.pdel.com

280

Cross Sectional View

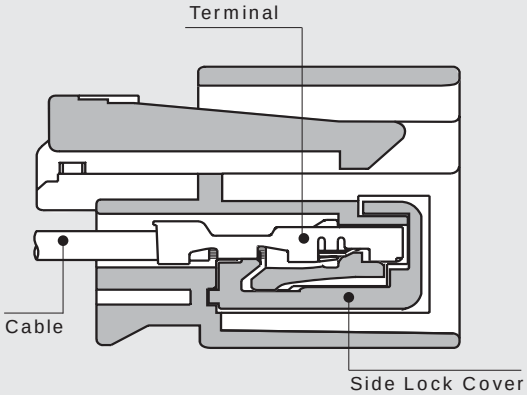

Female Connector Assembly

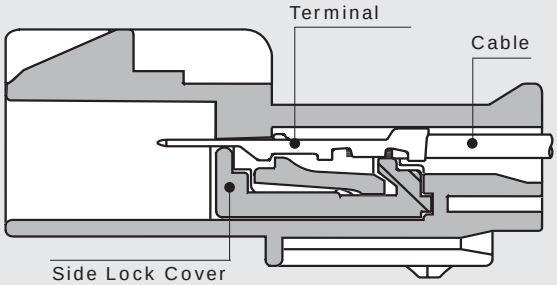

Male Connector Assembly

GT 280 Female Terminals Unsealed

Part #	Cable Range (mm²)	Material	Plating
15304710	0.50-0.35	Tin Brass	Tin
15304711	1.00-0.75	Tin Brass	Tin
15304712	3.00-1.50	Tin Brass	Tin
15304713	5.00-4.00	Tin Brass	Tin

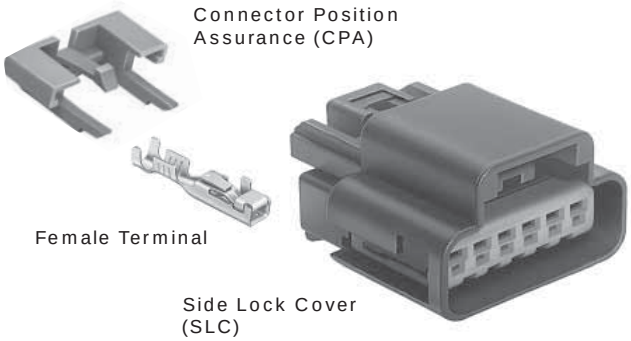

Female Connector Assembly

GT 280 Female Connector Assemblies Unsealed USCAR Footprint

USCAR #	Delphi Part #	Color	Material
280-U-003-2-A01	12176445	Natural	PA6 10% GF & 20% GB
280-U-003-2-B01	12176446	Black	PA6 10% GF & 20% GB
280-U-003-2-C01	12176836	Grey	PA6 10% GF & 20% GB
280-U-004-1-A01	15466671	Grey	PBT 20% GF
280-U-004-1-B01	15489152	Grey	PBT 20% GF
280-U-004-1-C01	15489154	Grey	PBT 20% GF
280-U-004-1-D01	15489156	Grey	PBT 20% GF

GT 280 Female Connector Assemblies Unsealed

# Cavities	Conn. Asm.	Color	Material
2	15326870	Black	PA6 10% GF & 20% GB
3	15326877	Black	PA6 10% GF & 20% GB
4	15326886	Black	PA6 10% GF & 20% GB
5	15326893	Black	PA6 10% GF & 20% GB
6	15326900	Black	PA6 10% GF & 20% GB
8	15459914	Black	PBT 20% GF
10	15326931	Black	PA6 10% GF & 20% GB
12	13523064	Black	PBT 20% GF
14	15326945	Black	PA6 10% GF & 20% GB
16	15326952	Black	PA6 10% GF & 20% GB

Side Lock Covers (SLC) are included in the Connector Assemblies listed in this section.

NOTE: Specifications in this catalog are for general reference only and are subject to change without notice. To verify product information, please contact a Delphi representative.

Peters de Laet
503-661-5088 – phone 503-661-5328 – fax
www.pdel.com

280

Unsealed System Application Information

280 Series Terminals – Tin Plated

CABLE RANGE (mm²): 0.35-5.0

CURRENT RANGE (AMPS): 0-25

TEMP RANGE °C: ..... -40 to 125

RESISTANCE: ..... <10mΩ@20mV

VOLTAGE DROP: ..... <4.0mV/amp

CENTERLINE SPACING (mm): 5.5

BLADE WIDTH (mm): 2.8

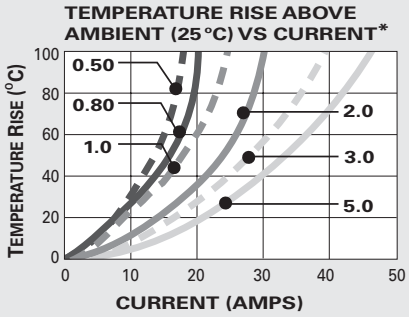

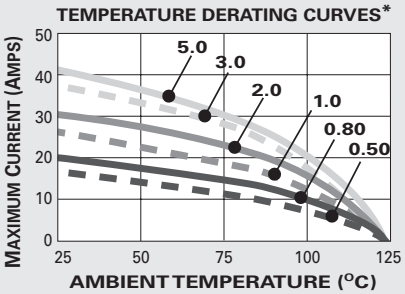

*The test data are based on single circuits in free space and were generated using a "Lumped Resistance" model. This model does not account for all of the variables that would be present in an actual application. For actual product performance, contact your regional support representative.

Male Terminal

Side Lock Cover (SLC)

Male Connector Assembly

GT 280 Male Connector Assemblies Unsealed

# Cavities	Connector	Color	Material
2	15326874	Black	PA6 10% GF & 20% GB
3	15326881	Black	PA6 10% GF & 20% GB
4	15326890	Black	PA6 10% GF & 20% GB
5	15326897	Black	PA6 10% GF & 20% GB
6	15326904	Black	PA6 10% GF & 20% GB
8	15459916	Black	PBT 20% GF
10	15326935	Black	PA6 10% GF & 20% GB
12	15326942	Black	PA6 10% GF & 20% GB
14	15326949	Black	PA6 10% GF & 20% GB
16	15326956	Black	PA6 10% GF & 20% GB

Side Lock Covers (SLC) are included in the Connector Assemblies listed in this section.

GT 280 Male Terminals Unsealed

Part #	Cable Range (mm²)	Material	Plating
15304722	0.50-0.35	Tin Brass	Tin
15304723	1.00-0.75	Tin Brass	Tin
15304724	3.00-1.50	Tin Brass	Tin
15304725	5.00-4.00	Tin Brass	Tin

SECTION NOTES:

- Due to rigid tolerances of connector cavities, it is critical to meet all crimp dimensions as specified.
- Special consideration must be used when applying terminals 15304713 and 15304725 due to cavity space limitations.

NOTE: Specifications in this catalog are for general reference only and are subject to change without notice. To verify product information, please contact a Delphi representative.

Peters de Laet
503-661-5088 – phone 503-661-5328 – fax
www.pdel.com

280

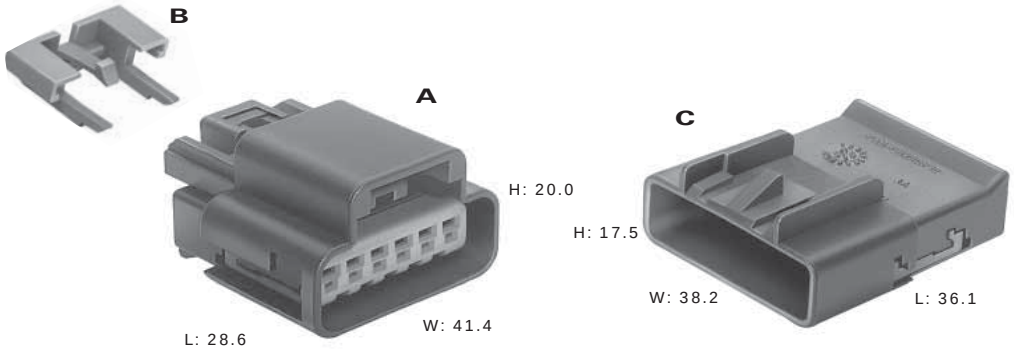

Total Mated Length: 48.7mm

A. Part No: 15326870

Description:	Connector Assembly 2F
Size:	28.6L x 20.0H x 19.4W
Color:	Black
Material:	PA6 10% GF & 20% GB
Terminals:	See Page 1.14

Part No: 15326877

Description:	Connector Assembly 3F
Size:	28.6L x 20.0H x 24.9W
Color:	Black
Material:	PA6 10% GF & 20% GB
Terminals:	See Page 1.14

Part No: 15326886

Description:	Connector Assembly 4F
Size:	28.6L x 20.0H x 30.4W
Color:	Black
Material:	PA6 10% GF & 20% GB
Terminals:	See Page 1.14

Part No: 15326893

Description:	Connector Assembly 5F
Size:	28.6L x 20.0H x 35.9W
Color:	Black
Material:	PA6 10% GF & 20% GB
Terminals:	See Page 1.14

Part No: 15326900

Description:	Connector Assembly 6F
Size:	28.6L x 20.0H x 41.4W
Color:	Black
Material:	PA6 10% GF & 20% GB
Terminals:	See Page 1.14

B. Part No: 15317832

Description:	CPA
Color:	Gray
Material:	PA6 10% GF & 20% GB

C. Part No: 15326874

Description:	Connector Assembly 2M
Size:	36.1L x 17.5H x 16.2W
Color:	Black
Material:	PA6 10% GF & 20% GB
Terminals:	See Page 1.15

Part No: 15326881

Description:	Connector Assembly 3M
Size:	36.1L x 17.5H x 21.7W
Color:	Black
Material:	PA6 10% GF & 20% GB
Terminals:	See Page 1.15

Part No: 15326890

Description:	Connector Assembly 4M
Size:	36.1L x 17.5H x 27.2W
Color:	Black
Material:	PA6 10% GF & 20% GB
Terminals:	See Page 1.15

Part No: 15326897

Description:	Connector Assembly 5M
Size:	36.1L x 17.5H x 32.7W
Color:	Black
Material:	PA6 10% GF & 20% GB
Terminals:	See Page 1.15

Part No: 15326904

Description:	Connector Assembly 6M
Size:	36.1L x 17.5H x 38.2W
Color:	Black
Material:	PA6 10% GF & 20% GB
Terminals:	See Page 1.15

NOTE: Specifications in this catalog are for general reference only and are subject to change without notice. To verify product information, please contact a Delphi representative.

Peters de Laet
503-661-5088 – phone 503-661-5328 – fax
www.pdel.com

280

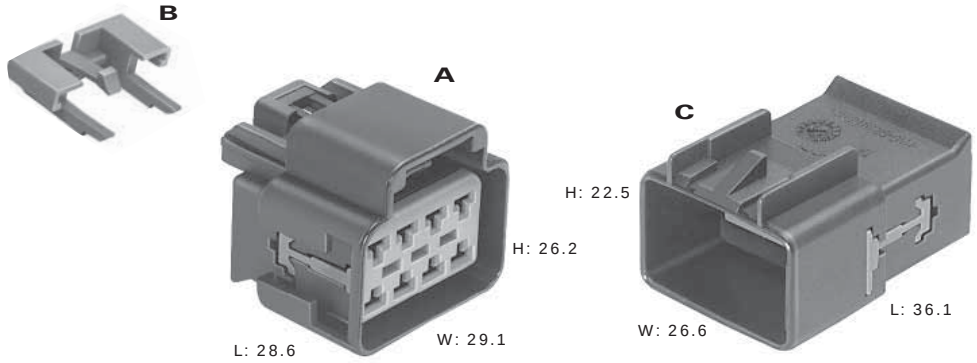

Total Mated Length: 48.7mm

A. Part No: 15459914

Description:	Connector Assembly 8F
Size:	28.6L x 26.2H x 29.1W
Color:	Black
Material:	PBT 20% GF
Terminals:	See Page 1.14

Part No: 15326931

Description:	Connector Assembly 10F
Size:	28.6L x 26.2H x 34.6W
Color:	Black
Material:	PA6 10% GF & 20% GB
Terminals:	See Page 1.14

Part No: 13523064

Description:	Connector Assembly 12F
Size:	28.6L x 26.2H x 40.1W
Color:	Black
Material:	PBT 20% GF
Terminals:	See Page 1.14

Part No: 15326945

Description:	Connector Assembly 14F
Size:	28.6L x 26.2H x 45.6W
Color:	Black
Material:	PA6 10% GF & 20% GB
Terminals:	See Page 1.14

Part No: 15326952

Description:	Connector Assembly 16F
Size:	28.6L x 26.2H x 51.1W
Color:	Black
Material:	PA6 10% GF & 20% GB
Terminals:	See Page 1.14

B. Part No: 15317832

Description:	CPA
Color:	Gray
Material:	PA6 10% GF & 20% GB

C. Part No: 15459916

Description:	Connector Assembly 8M
Size:	36.1L x 22.5H x 26.6W
Color:	Black
Material:	PBT 20% GF
Terminals:	See Page 1.15

Part No: 15326935

Description:	Connector Assembly 10M
Size:	36.1L x 22.5H x 32.1W
Color:	Black
Material:	PA6 10% GF & 20% GB
Terminals:	See Page 1.15

Part No: 15326942

Description:	Connector Assembly 12M
Size:	36.1L x 22.5H x 37.6W
Color:	Black
Material:	PA6 10% GF & 20% GB
Terminals:	See Page 1.15

Part No: 15326949

Description:	Connector Assembly 14M
Size:	36.1L x 22.5H x 43.1W
Color:	Black
Material:	PA6 10% GF & 20% GB
Terminals:	See Page 1.15

Part No: 15326956

Description:	Connector Assembly 16M
Size:	36.1L x 22.5H x 48.6W
Color:	Black
Material:	PA6 10% GF & 20% GB
Terminals:	See Page 1.15

NOTE: Specifications in this catalog are for general reference only and are subject to change without notice. To verify product information, please contact a Delphi representative.

Peters de Laet
503-661-5088 – phone 503-661-5328 – fax
www.pdel.com

280

Cross Sectional View

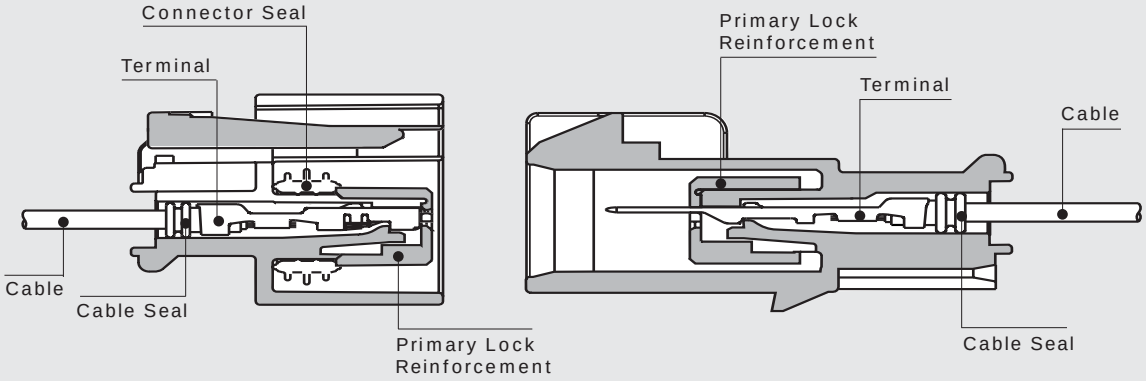

Female Connector Assembly **Male Connector Assembly**

GT 280 Female Terminals Sealed

Part #	Cable Range (mm²)	Material	Plating
15304718	0.50-0.35	Tin Brass	Tin
15304719	1.00-0.75	Tin Brass	Tin
15304720†	3.00-1.50	Tin Brass	Tin
15326004	5.00-4.00	Beryllium Copper	Tin

GT 280 Cable Seals

Reel Part #	Loose Part #	Cable Diameter	Material	Color
12191221	15366065	1.20-1.85	Silicone	Orange
12191222	15366066	1.86-2.25	Silicone	Yellow
12191223	15366067	2.50-3.20	Silicone	Tan
–	15336674†	2.70-3.20	Silicone	Blue
–	12191235	3.40-3.90	Silicone	Purple

GT 280 Female Connector Assemblies Sealed USCAR Footprint

USCAR #	Delphi Part #	Color	Material
280-S-002-1-A01	13517352	Black	PBT 20% GF
280-S-006-2-A01	15476196	Black	PBT 20% GF
280-S-006-2-B01	15476197	Grey	PBT 20% GF
280-S-006-2-C01	15476198	Brown	PBT 20% GF
280-S-006-2-D01	15476199	Green	PBT 20% GF

† Note: If cable seal 15336674 is used with terminal 15304720, connector cavity needs to be designed with 5.2mm diameter sealing surface.

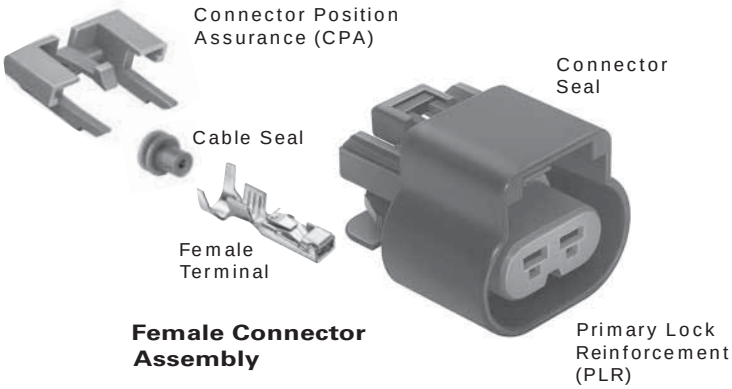

Female Connector Assembly

GT 280 Female Connector Assemblies Sealed

# Cavities	Conn. Asm.	Color	Material
2	13518845	Black	PBT 20% GF
3	13521455	Black	PBT 20% GF
4	13521459	Black	PBT 20% GF
5	13521463	Black	PBT 20% GF
6	13521467	Black	PBT 20% GF
8	15326654	Black	PA6 10% GF & 20% GB
10	15326660	Black	PA6 10% GF & 20% GB
12	15326910	Black	PA6 10% GF & 20% GB
14	15326917	Black	PA6 10% GF & 20% GB
16	15326666	Black	PA6 10% GF & 20% GB

Primary Lock Reinforcement (PLR) and Connector Seals are included in the Connector Assemblies listed in this section.

NOTE: Specifications in this catalog are for general reference only and are subject to change without notice. To verify product information, please contact a Delphi representative.

Peters de Laet
503-661-5088 – phone 503-661-5328 – fax
www.pdel.com

280

Sealed System Application Information

280 Series Terminals – Tin Plated

CABLE RANGE (mm²): 0.35-5.0
CURRENT RANGE (AMPS): 0-25
TEMP RANGE °C: ..... -40 to 125
RESISTANCE: ..... <10mΩ@20mV
VOLTAGE DROP: ..... <4.0mV/amp
CENTERLINE SPACING (mm): 6.5
BLADE WIDTH (mm): 2.8

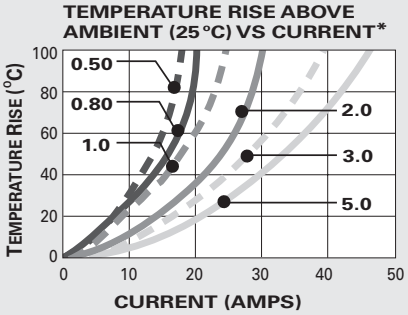

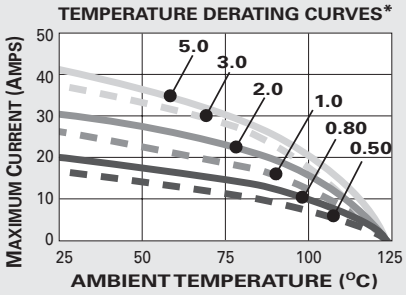

*The test data are based on single circuits in free space and were generated using a "Lumped Resistance" model. This model does not account for all of the variables that would be present in an actual application. For actual product performance, contact your regional support representative.

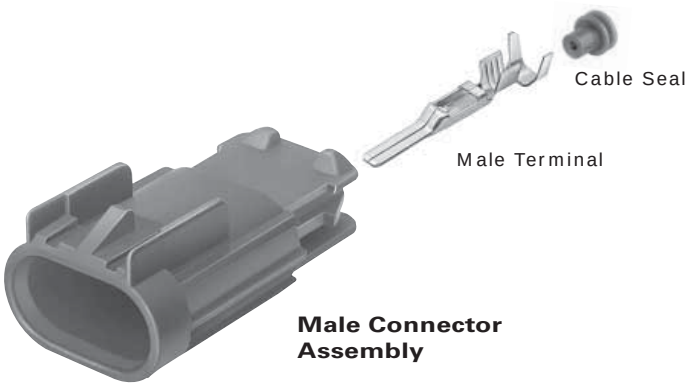

GT 280 Male Connector Assemblies Sealed

# Cavities	Connector	Color	Material
2	13518847	Black	PBT 20% GF
3	13521457	Black	PBT 20% GF
4	13521461	Black	PBT 20% GF
5	13521465	Black	PBT 20% GF
6	13521469	Black	PBT 20% GF
8	15326655	Black	PA6 10% GF & 20% GB
10	15326661	Black	PA6 10% GF & 20% GB
12	15326915	Black	PA6 10% GF & 20% GB
14	15326922	Black	PA6 10% GF & 20% GB
16	15326667	Black	PA6 10% GF & 20% GB

Primary Lock Reinforcement is included in the Connector Assemblies listed in this section.

GT 280 Male Terminals Sealed

Part #	Cable Range (mm²)	Material	Plating
15304730	0.50-0.35	Tin Brass	Tin
15304731	1.00-0.75	Tin Brass	Tin
15304732	3.00-1.50	Tin Brass	Tin

GT 280 Cavity Plug*

Part #	Cavity Diameter	Material	Color
15305170	5.8mm	Silicone	White

* Cavity plugs seal unused female and male cavities.

SECTION NOTES:

- Due to rigid tolerances of connector cavities, it is critical to meet all crimp dimensions as specified.

NOTE: Specifications in this catalog are for general reference only and are subject to change without notice. To verify product information, please contact a Delphi representative.

Peters de Laet
503-661-5088 – phone 503-661-5328 – fax
www.pdel.com

280

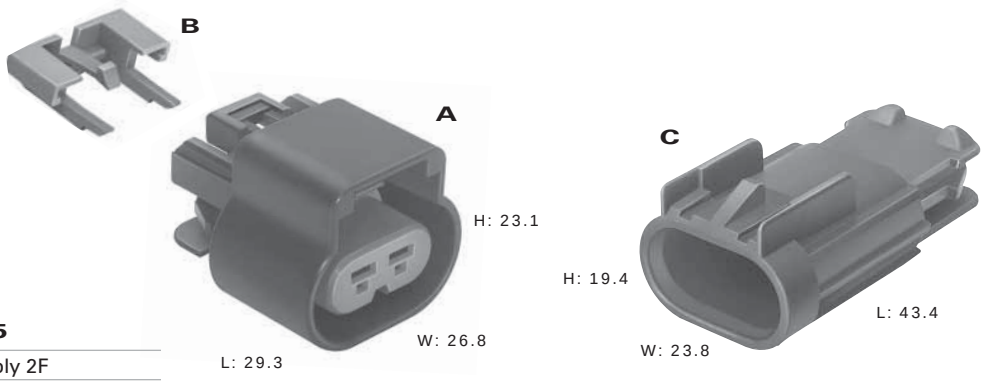

Total Mated Length: 56.7mm

A. Part No: 13518845

Description:	Connector Assembly 2F
Size:	29.3L x 23.1H x 26.8W
Color:	Black
Material:	PBT 20% GF
Terminals:	See Page 1.18
Seals/Plugs:	See Page 1.18, 1.19

Part No: 13521455

Description:	Connector Assembly 3F
Size:	29.3L x 23.1H x 33.3W
Color:	Black
Material:	PBT 20% GF
Terminals:	See Page 1.18
Seals/Plugs:	See Page 1.18, 1.19

Part No: 13521459

Description:	Connector Assembly 4F
Size:	29.3L x 23.1H x 39.8W
Color:	Black
Material:	PBT 20% GF
Terminals:	See Page 1.18
Seals/Plugs:	See Page 1.18, 1.19

Part No: 13521463

Description:	Connector Assembly 5F
Size:	29.3L x 23.1H x 46.3W
Color:	Black
Material:	PBT 20% GF
Terminals:	See Page 1.18
Seals/Plugs:	See Page 1.18, 1.19

Part No: 13521467

Description:	Connector Assembly 6F
Size:	29.3L x 23.1H x 52.8W
Color:	Black
Material:	PBT 20% GF
Terminals:	See Page 1.18
Seals/Plugs:	See Page 1.18, 1.19

B. Part No: 15317832

Description:	CPA
Color:	Gray
Material:	PA6 10% GF & 20% GB

C. Part No: 13518847

Description:	Connector Assembly 2M
Size:	43.4L x 19.4H x 23.8W
Color:	Black
Material:	PBT 20% GF
Terminals:	See Page 1.19
Seals/Plugs:	See Page 1.18, 1.19

Part No: 13521457

Description:	Connector Assembly 3M
Size:	43.4L x 19.4H x 30.3W
Color:	Black
Material:	PBT 20% GF
Terminals:	See Page 1.19
Seals/Plugs:	See Page 1.18, 1.19

Part No: 13521461

Description:	Connector Assembly 4M
Size:	43.4L x 19.4H x 36.8W
Color:	Black
Material:	PBT 20% GF
Terminals:	See Page 1.19
Seals/Plugs:	See Page 1.18, 1.19

Part No: 13521465

Description:	Connector Assembly 5M
Size:	43.4L x 19.4H x 43.3W
Color:	Black
Material:	PBT 20% GF
Terminals:	See Page 1.19
Seals/Plugs:	See Page 1.18, 1.19

Part No: 13521469

Description:	Connector Assembly 6M
Size:	43.4L x 19.4H x 49.8W
Color:	Black
Material:	PBT 20% GF
Terminals:	See Page 1.19
Seals/Plugs:	See Page 1.18, 1.19

NOTE: Specifications in this catalog are for general reference only and are subject to change without notice. To verify product information, please contact a Delphi representative.

Peters de Laet
503-661-5088 – phone 503-661-5328 – fax
www.pdel.com

280

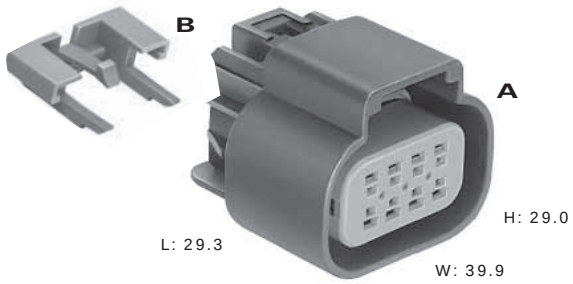

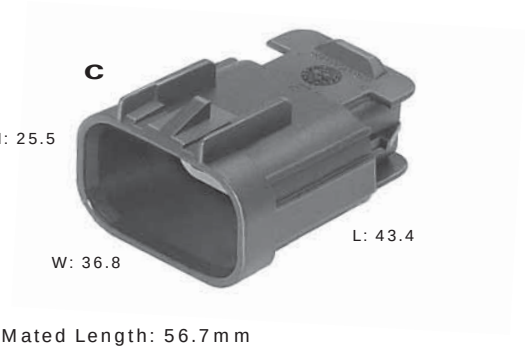

Total Mated Length: 56.7mm

A. Part No: 15326654

Description:	Connector Assembly 8F
Size:	29.3L x 29.0H x 39.9W
Color:	Black
Material:	PA6 10% GF & 20% GB
Terminals:	See Page 1.18
Seals/Plugs:	See Page 1.18, 1.19

Part No: 15326660

Description:	Connector Assembly 10F
Size:	29.3L x 29.0H x 46.4W
Color:	Black
Material:	PA6 10% GF & 20% GB
Terminals:	See Page 1.18
Seals/Plugs:	See Page 1.18, 1.19

Part No: 15326910

Description:	Connector Assembly 12F
Size:	29.3L x 29.0H x 52.9W
Color:	Black
Material:	PA6 10% GF & 20% GB
Terminals:	See Page 1.18
Seals/Plugs:	See Page 1.18, 1.19

Part No: 15326917

Description:	Connector Assembly 14F
Size:	29.3L x 29.0H x 59.4W
Color:	Black
Material:	PA6 10% GF & 20% GB
Terminals:	See Page 1.18
Seals/Plugs:	See Page 1.18, 1.19

Part No: 15326666

Description:	Connector Assembly 16F
Size:	29.3L x 29.0H x 65.9W
Color:	Black
Material:	PA6 10% GF & 20% GB
Terminals:	See Page 1.18
Seals/Plugs:	See Page 1.18, 1.19

B. Part No: 15317832

Description:	CPA
Color:	Gray
Material:	PA6 10% GF & 20% GB

C. Part No: 15326655

Description:	Connector Assembly 8M
Size:	43.4L x 25.5H x 36.8W
Color:	Black
Material:	PA6 10% GF & 20% GB
Terminals:	See Page 1.19
Seals/plugs:	See Page 1.18, 1.19

Part No: 15326661

Description:	Connector Assembly 10M
Size:	43.4L x 25.5H x 43.3W
Color:	Black
Material:	PA6 10% GF & 20% GB
Terminals:	See Page 1.19
Seals/Plugs:	See Page 1.18, 1.19

Part No: 15326915

Description:	Connector Assembly 12M
Size:	43.4L x 25.5H x 49.8W
Color:	Black
Material:	PA6 10% GF & 20% GB
Terminals:	See Page 1.19
Seals/Plugs:	See Page 1.18, 1.19

Part No: 15326922

Description:	Connector Assembly 14M
Size:	43.4L x 25.5H x 56.3W
Color:	Black
Material:	PA6 10% GF & 20% GB
Terminals:	See Page 1.19
Seals/Plugs:	See Page 1.18, 1.19

Part No: 15326667

Description:	Connector Assembly 16M
Size:	43.4L x 25.5H x 62.8W
Color:	Black
Material:	PA6 10% GF & 20% GB
Terminals:	See Page 1.19
Seals/Plugs:	See Page 1.18, 1.19

NOTE: Specifications in this catalog are for general reference only and are subject to change without notice. To verify product information, please contact a Delphi representative.

Peters de Laet
503-661-5088 – phone 503-661-5328 – fax
www.pdel.com

280 Device Connections

GT 280 Connection Systems are designed to mate to most headlamps, including a variety of daytime running lamps, high beam, and dual filament BULBS.

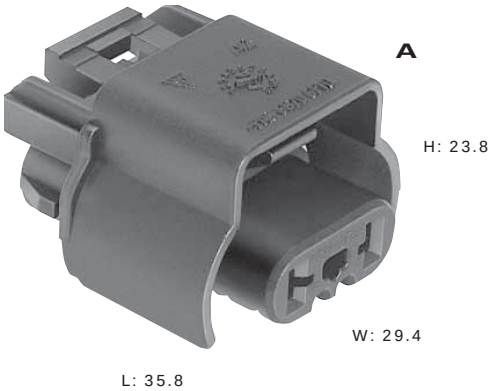

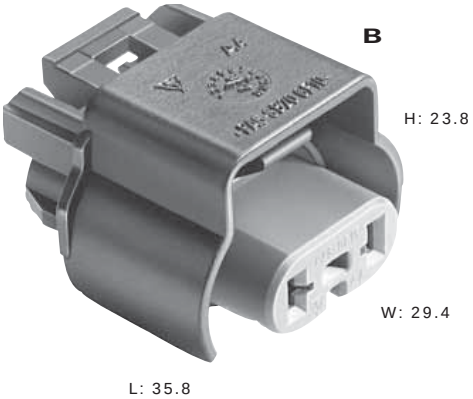

A. Part No: 15336116

Description:	Connector Assembly 2F
Size:	35.8L x 23.8H x 29.4W
Color:	Black
Material:	PA6 20% GF & 10% GB
Terminals:	See Page 1.18
Seals/Plugs:	See Page 2.30, 2.31

B. Part No: 15336117

Description:	Connector Assembly 2F
Size:	35.8L x 23.8H x 29.4W
Color:	Brown
Material:	PA6 20% GF & 10% GB
Terminals:	See Page 1.18
Seals/Plugs:	See Page 2.30, 2.31

NOTE: Specifications in this catalog are for general reference only and are subject to change without notice. To verify product information, please contact a Delphi representative.

Peters de Laet
503-661-5088 – phone 503-661-5328 – fax
www.pdel.com

Peters de Laet
503-661-5088 – phone 503-661-5328 – fax
www.pdel.com

150/280 Mixed

Cross Sectional View

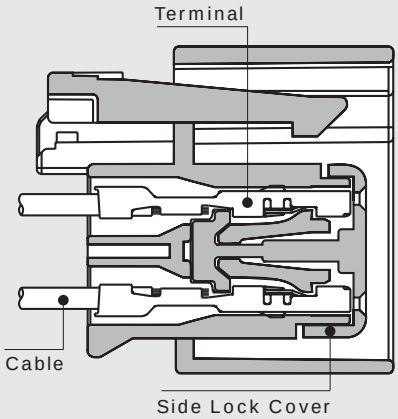

Female Connector Assembly

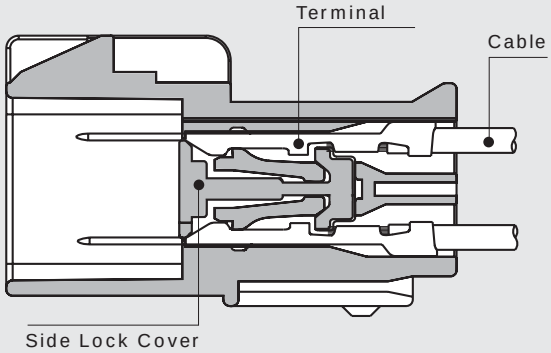

Male Connector Assembly

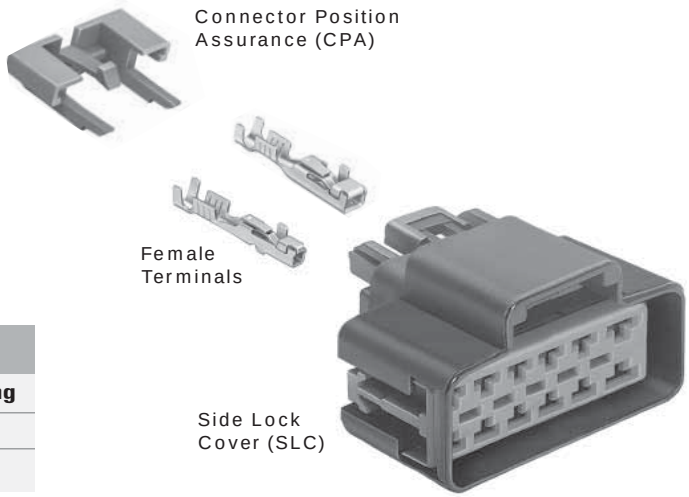

Female Connector Assembly

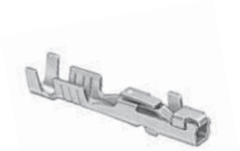

GT 150 Female Terminals Unsealed			
Part #	**Cable Range (mm²)**	**Material**	**Plating**
12191811	0.50-0.35	Tin Brass	Tin
12191812	1.00-0.75	Tin Brass	Tin

GT 280 Female Terminals Unsealed			
Part #	**Cable Range (mm²)**	**Material**	**Plating**
15304710	0.50-0.35	Tin Brass	Tin
15304711	1.00-0.75	Tin Brass	Tin
15304712	3.00-1.50	Tin Brass	Tin
15304713	5.00-4.00	Tin Brass	Tin

GT Mixed Female Connector Assemblies Unsealed			
# Cavities	**Connector**	**Color**	**Material**
12	15336205	Black	PA6 10% GF & 20% GB
16	15336219	Black	PA6 10% GF & 20% GB
18	15326082	Black	PA6 10% GF & 20% GB

Side Lock Covers (SLC) are included in the Connector Assemblies listed in this section.

NOTE: Specifications in this catalog are for general reference only and are subject to change without notice. To verify product information, please contact a Delphi representative.

Peters de Laet
503-661-5088 – phone 503-661-5328 – fax
www.pdel.com

150/280 Mixed

Unsealed System Application Information

GT 150 Series Terminals – Tin Plated

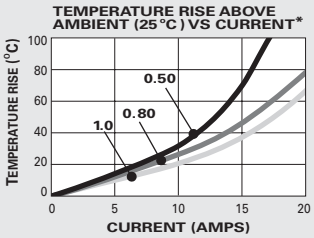

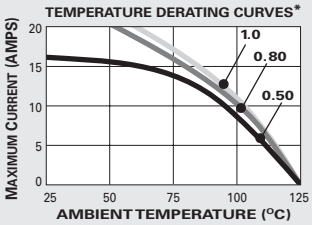

CABLE RANGE (mm²): 0.35-1.0
CURRENT RANGE (AMPS): 0-15
TEMP RANGE °C: ..... -40 to 125
RESISTANCE: ..... <10mΩ@20mV

VOLTAGE DROP: ... <10.0mV/amp
CENTERLINE SPACING (mm): 4.0
BLADE WIDTH (mm): 1.5

280 Series Terminals – Tin Plated

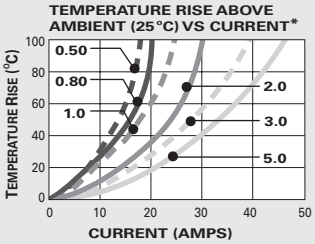

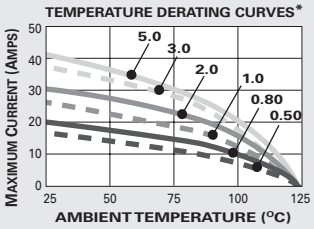

CABLE RANGE (mm²): 0.35-5.0
CURRENT RANGE (AMPS): 0-25
TEMP RANGE °C: ..... -40 to 125
RESISTANCE: ..... <10mΩ@20mV

VOLTAGE DROP: ..... <4.0mV/amp
CENTERLINE SPACING (mm): 5.5
BLADE WIDTH (mm): 2.8

*The test data are based on single circuits in free space and were generated using a "Lumped Resistance" model. This model does not account for all of the variables that would be present in an actual application. For actual product performance, contact your regional support representative.

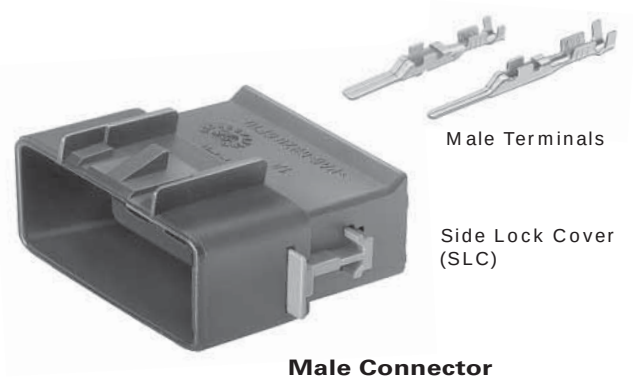

Male Connector Assembly

GT Mixed Male Connector Assemblies Unsealed

# Cavities	Connector	Color	Material
12	15336209	Black	PA6 10% GF & 20% GB
16	15336224	Black	PA6 10% GF & 20% GB

Side Lock Covers (SLC) are included in the Connector Assemblies listed in this section.

GT 150 Male Terminals Unsealed

Part #	Cable Range (mm²)	Material	Plating
15304701	0.50-0.35	Tin Brass	Tin
15304702	1.00-0.75	Tin Brass	Tin

GT 280 Male Terminals Unsealed

Part #	Cable Range (mm²)	Material	Plating
15304722	0.50-0.35	Tin Brass	Tin
15304723	1.00-0.75	Tin Brass	Tin
15304724	3.00-1.50	Tin Brass	Tin
15304725	5.00-4.00	Tin Brass	Tin

SECTION NOTES:

- Due to rigid tolerances of connector cavities, it is critical to meet all crimp dimensions as specified.
- Special consideration must be used when applying terminals 15304713 and 15304725 due to cavity space limitations.

NOTE: Specifications in this catalog are for general reference only and are subject to change without notice. To verify product information, please contact a Delphi representative.

Peters de Laet
503-661-5088 – phone 503-661-5328 – fax
www.pdel.com

150/280 Mixed

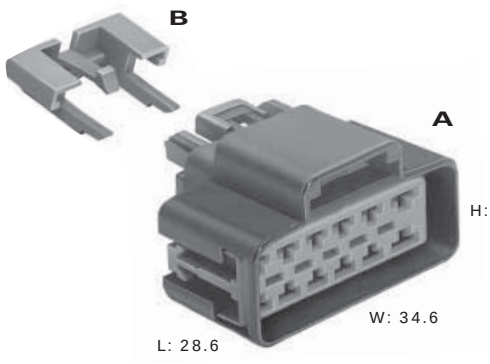

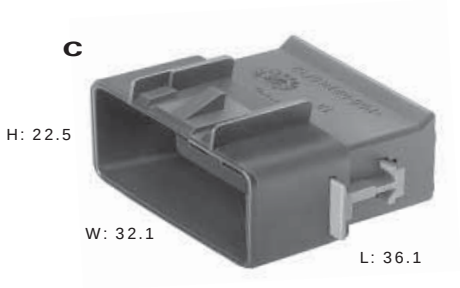

Total Mated Length: 56.7mm

A. Part No: 15336205

Description:	Connector Assembly 12F
Size:	28.6L x 26.2H x 34.6W
Color:	Black
Material:	PA6 10% GF & 20% GB
Terminals:	See Page 1.24

Part No: 15336219

Description:	Connector Assembly 16F
Size:	28.6L x 26.2H x 42.6W
Color:	Black
Material:	PA6 10% GF & 20% GB
Terminals:	See Page 1.24

Part No: 15326082

Description:	Connector Assembly 18F
Size:	28.6L x 26.2H x 46.6W
Color:	Black
Material:	PA6 10% GF & 20% GB
Terminals:	See Page 1.24

B. Part No: 15317832

Description:	CPA
Color:	Gray
Material:	PA6 10% GF & 20% GB

C. Part No: 15336209

Description:	Connector Assembly 12M
Size:	36.1L x 22.5H x 32.1W
Color:	Black
Material:	PA6 10% GF & 20% GB
Terminals:	See Page 1.25

Part No: 15336224

Description:	Connector Assembly 16M
Size:	36.1L x 22.5H x 40.1W
Color:	Black
Material:	PA6 10% GF & 20% GB
Terminals:	See Page 1.25

KEY:

- ◪ 150 SERIES
- ■ 280 SERIES

Mixed connectors feature a combination of different terminal cavities, as indicated by the key.

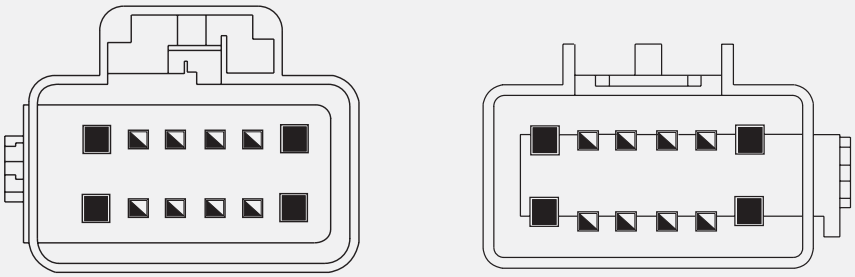

NOTE: Specifications in this catalog are for general reference only and are subject to change without notice. To verify product information, please contact a Delphi representative.

Peters de Laet
503-661-5088 – phone 503-661-5328 – fax
www.pdel.com

Peters de Laet
503-661-5088 – phone 503-661-5328 – fax
www.pdel.com

150/280 Mixed

Cross Sectional View

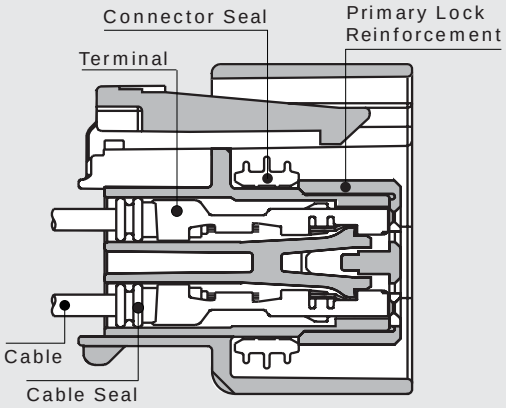

Female Connector Assembly

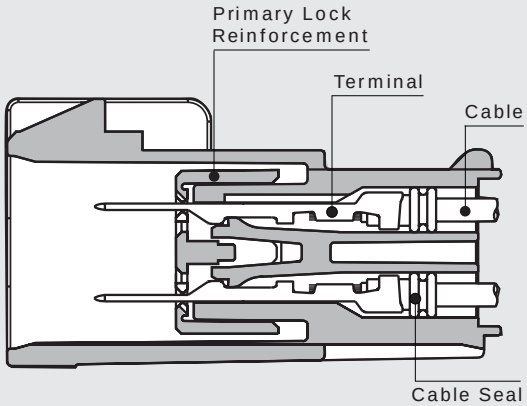

Male Connector Assembly

150

280

GT 150 Female Terminals Sealed

Part #	Cable Range (mm²)	Material	Plating
12191818	0.50-0.35	Tin Brass	Tin
12191819	1.00-0.75	Tin Brass	Tin

GT 280 Female Terminals Sealed

Part #	Cable Range (mm²)	Material	Plating
15304718	0.50-0.35	Tin Brass	Tin
15304719	1.00-0.75	Tin Brass	Tin
15304720 †	3.00-1.50	Tin Brass	Tin
15326004	5.00-4.00	Beryllium Copper	Tin

GT 150 Cable Seals

Reel Part #	Loose Part #	Cable Diameter	Material	Color
12191152	15366021	1.20-1.90	Silicone	White
12191153	15366060	1.86-2.40	Silicone	Blue

GT 280 Cable Seals

Reel Part #	Loose Part #	Cable Diameter	Material	Color
12191221	15366065	1.20-1.85	Silicone	Orange
12191222	15366066	1.86-2.25	Silicone	Yellow
12191223	15366067	2.50-3.20	Silicone	Tan
–	12191235	3.40-3.90	Silicone	Purple
–	15336674 †	2.70-3.20	Silicone	Blue

† Note: If cable seal 15336674 is used with terminal 15304720, connector cavity needs to be designed with 5.2mm diameter sealing surface.

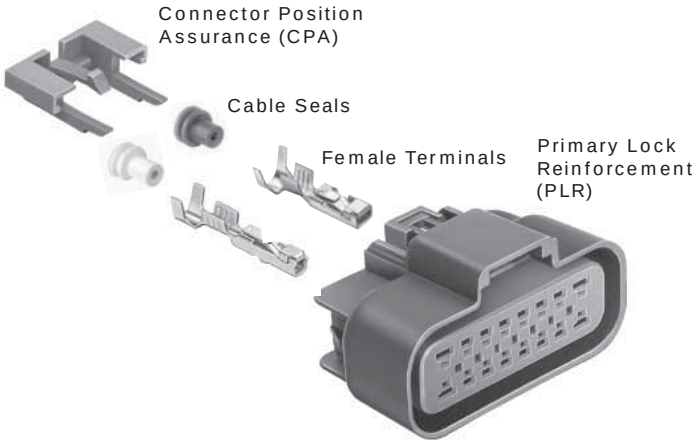

Female Connector Assembly

GT Mixed Female Connector Assemblies Sealed

# Cavities	Connector	Color	Material
12	15326939	Black	PA6 10% GF & 20% GB
14	15336037	Black	PA6 10% GF & 20% GB
16	15326084	Black	PA6 10% GF & 20% GB

Primary Lock Reinforcement (PLR) and Connector Seals are included in the Connector Assemblies listed in this section.

NOTE: Specifications in this catalog are for general reference only and are subject to change without notice. To verify product information, please contact a Delphi representative.

Peters de Laet
503-661-5088 – phone 503-661-5328 – fax
www.pdel.com

150/280 Mixed

Sealed System Application Information

GT 150 Series Terminals – Tin Plated

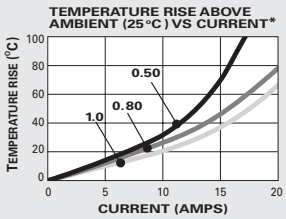

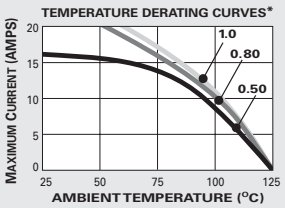

CABLE RANGE (mm²): 0.35-1.0
CURRENT RANGE (AMPS): 0-15
TEMP RANGE °C: ..... -40 to 125
RESISTANCE: ..... <10mΩ@20mV

VOLTAGE DROP: ... <10.0mV/amp
CENTERLINE SPACING (mm): 4.5
BLADE WIDTH (mm): 1.5

280 Series Terminals – Tin Plated

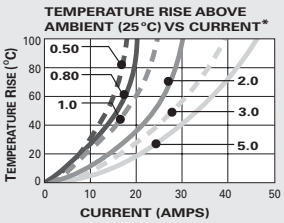

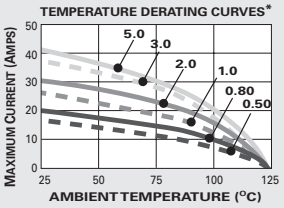

CABLE RANGE (mm²): 0.35-5.0
CURRENT RANGE (AMPS): 0-25
TEMP RANGE °C: ..... -40 to 125
RESISTANCE: ..... <10mΩ@20mV

VOLTAGE DROP: ..... <4.0mV/amp
CENTERLINE SPACING (mm): 6.5
BLADE WIDTH (mm): 2.8

*The test data are based on single circuits in free space and were generated using a "Lumped Resistance" model. This model does not account for all of the variables that would be present in an actual application. For actual product performance, contact your regional support representative.

150

280

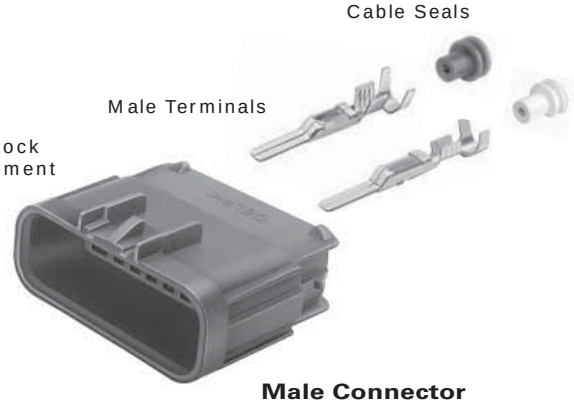

Male Connector Assembly

GT 150 Male Terminals Sealed

Part #	Cable Range (mm²)	Material	Plating
15326268	0.50-0.35	Tin Brass	Tin
15326269	1.00-0.75	Tin Brass	Tin

GT 280 Male Terminals Sealed

Part #	Cable Range (mm²)	Material	Plating
15304730	0.50-0.35	Tin Brass	Tin
15304731	1.00-0.75	Tin Brass	Tin
15304732	3.00-1.50	Tin Brass	Tin

150

280

GT Mixed Male Connector Assemblies Sealed

# Cavities	Connector	Color	Material
12	15336034	Black	PA6 10% GF & 20% GB
14	15422562	Black	PBT 20% GF
16	15326085	Black	PA6 10% GF & 20% GB

Primary Lock Reinforcement (PLR) is included in the Connector Assemblies listed in this section.

GT 150 Cavity Plug*

Part #	Cavity Diameter	Material	Color
15305171	4.0mm	Silicone	Green

* Cavity plugs seal unused female and male cavities.

GT 280 Cavity Plug*

Part #	Cavity Diameter	Material	Color
15305170	5.8mm	Silicone	White

* Cavity plugs seal unused female and male cavities.

SECTION NOTES:

- Due to rigid tolerances of connector cavities, it is critical to meet all crimp dimensions as specified.

NOTE: Specifications in this catalog are for general reference only and are subject to change without notice. To verify product information, please contact a Delphi representative.

Peters de Laet
503-661-5088 – phone 503-661-5328 – fax
www.pdel.com

150/280 Mixed

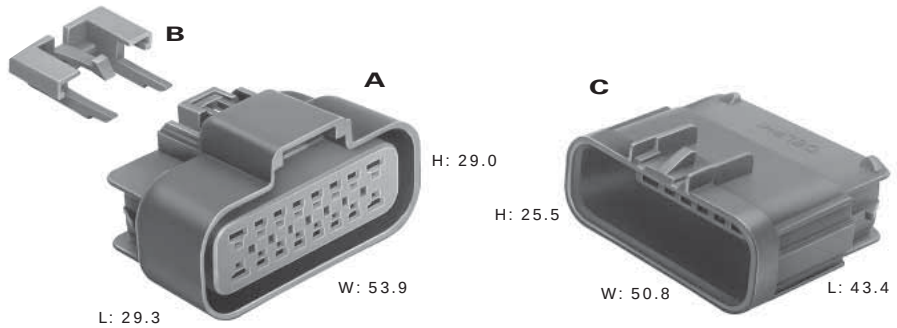

Total Mated Length: 56.7mm

A. Part No: 15326939

Description:	Connector Assembly 12F
Size:	29.3L x 29.0H x 44.9W
Color:	Black
Material:	PA6 10% GF & 20% GB
Terminals:	See Page 1.28
Seals/Plugs:	See Page 1.28, 1.29

Part No: 15336037

Description:	Connector Assembly 14F
Size:	29.3L x 29.0H x 49.4W
Color:	Black
Material:	PA6 10% GF & 20% GB
Terminals:	See Page 1.28
Seals/Plugs:	See Page 1.28, 1.29

Part No: 15326084

Description:	Connector Assembly 16F
Size:	29.3L x 29.0H x 53.9W
Color:	Black
Material:	PA6 10% GF & 20% GB
Terminals:	See Page 1.28
Seals/Plugs:	See Page 1.28, 1.29

B. Part No: 15317832

Description:	CPA
Color:	Gray
Material:	PA6 10% GF & 20% GB

C. Part No: 15336034

Description:	Connector Assembly 12M
Size:	43.4L x 25.5H x 41.8W
Color:	Black
Material:	PA6 10% GF & 20% GB
Terminals:	See Page 1.29
Seals/Plugs:	See Page 1.28, 1.29

Part No: 15422562

Description:	Connector Assembly 14M
Size:	43.4L x 25.5H x 46.3W
Color:	Black
Material:	PBT 20% GF
Terminals:	See Page 1.29
Seals/Plugs:	See Page 1.28, 1.29

Part No: 15326085

Description:	Connector Assembly 16M
Size:	43.4L x 25.5H x 50.8W
Color:	Black
Material:	PA6 10% GF & 20% GB
Terminals:	See Page 1.29
Seals/Plugs:	See Page 1.28, 1.29

KEY:

- ◪ 150 SERIES
- ■ 280 SERIES

Mixed connectors feature a combination of different terminal cavities, as indicated by the key.

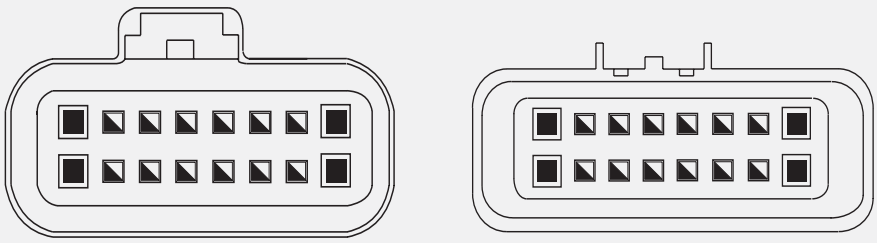

NOTE: Specifications in this catalog are for general reference only and are subject to change without notice. To verify product information, please contact a Delphi representative.

Peters de Laet
503-661-5088 – phone 503-661-5328 – fax
www.pdel.com

Peters de Laet
503-661-5088 – phone 503-661-5328 – fax
www.pdel.com

Lever Lock

Cross Sectional View

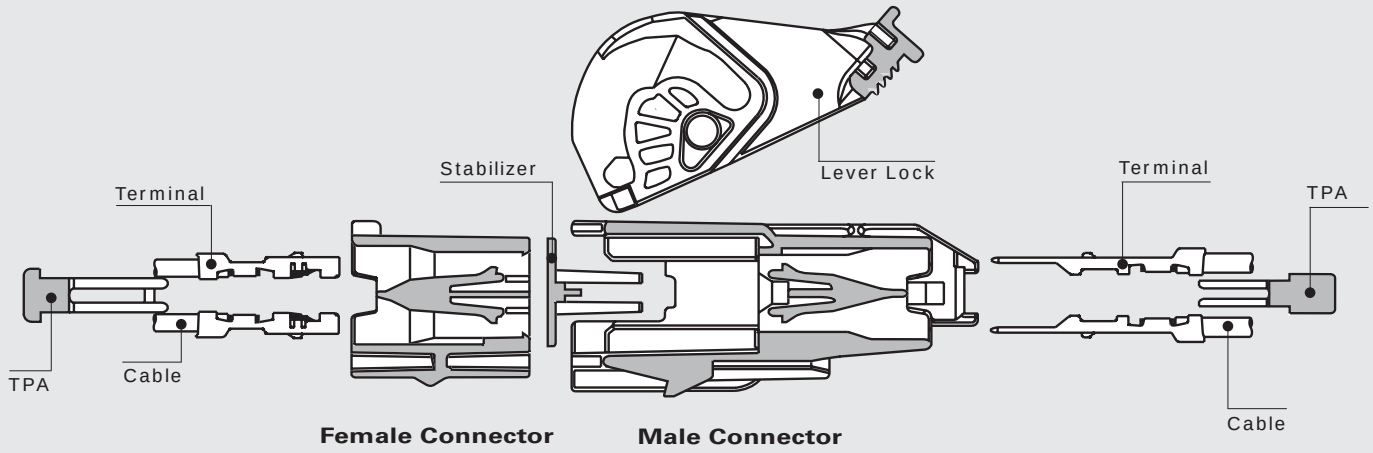

Terminal Position Assurance (TPA)

Female Terminals

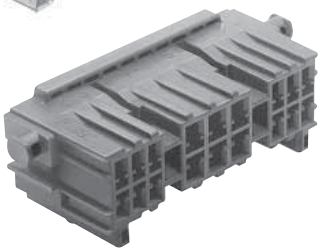

Female Connector

GT 150 Female Terminals Unsealed

Part #	Cable Range (mm²)	Material	Plating
12191811	0.50-0.35	Tin Brass	Tin
12191812	1.00-0.75	Tin Brass	Tin

GT 280 Female Terminals Unsealed

Part #	Cable Range (mm²)	Material	Plating
15304710	0.50-0.35	Tin Brass	Tin
15304711	1.00-0.75	Tin Brass	Tin
15304712	3.00-1.50	Tin Brass	Tin
15304713	5.00-4.00	Tin Brass	Tin

GT Female Lever Lock Connectors Unsealed

# Cavities	Connector	Color	Material	TPA
18	15304692	Black	PA66 HS IM	15304694
22	15317325	Lt. Gray	PA66 HS IM	15317326
30	15304908	Black	PA66 HS IM	15304913
40	15359287	Black	PA66 HS IM	15304842

NOTE: Specifications in this catalog are for general reference only and are subject to change without notice. To verify product information, please contact a Delphi representative.

Peters de Laet
503-661-5088 – phone 503-661-5328 – fax
www.pdel.com

Lever Lock

Unsealed System Application Information

GT 150 Series Terminals – Tin Plated

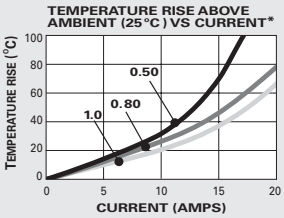

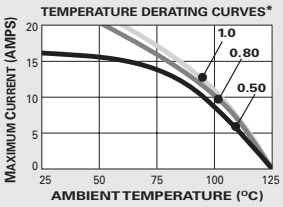

CABLE RANGE (mm²): 0.35-1.0
CURRENT RANGE (AMPS): 0-15
TEMP RANGE °C: ..... -40 to 125
RESISTANCE: ..... <10mΩ@20mV

VOLTAGE DROP: ... <10.0mV/amp
CENTERLINE SPACING (mm): 4.0
BLADE WIDTH (mm): 1.5

280 Series Terminals – Tin Plated

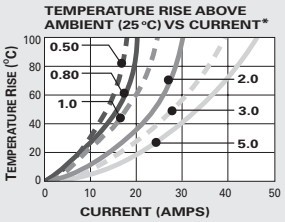

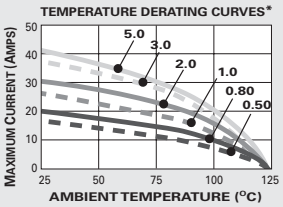

CABLE RANGE (mm²): 0.35-5.0
CURRENT RANGE (AMPS): 0-25
TEMP RANGE °C: ..... -40 to 125
RESISTANCE: ..... <10mΩ@20mV

VOLTAGE DROP: ..... <4.0mV/amp
CENTERLINE SPACING (mm): 5.5
BLADE WIDTH (mm): 2.8

*The test data are based on single circuits in free space and were generated using a "Lumped Resistance" model. This model does not account for all of the variables that would be present in an actual application. For actual product performance, contact your regional support representative.

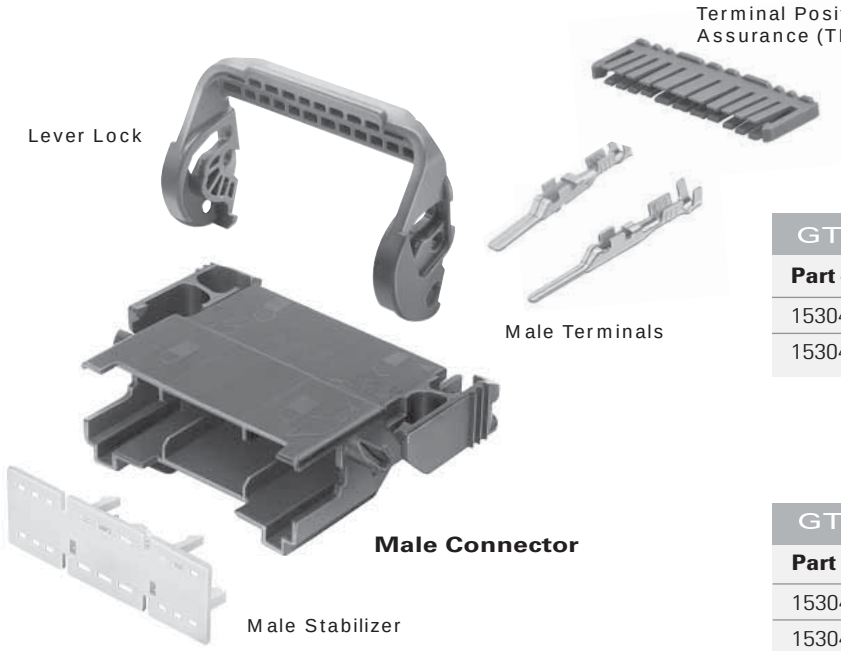

GT 150 Male Terminals Unsealed

Part #	Cable Range (mm²)	Material	Plating
15304701	0.50-0.35	Tin Brass	Tin
15304702	1.00-0.75	Tin Brass	Tin

GT 280 Male Terminals Unsealed

Part #	Cable Range (mm²)	Material	Plating
15304722	0.50-0.35	Tin Brass	Tin
15304723	1.00-0.75	Tin Brass	Tin
15304724	3.00-1.50	Tin Brass	Tin
15304725	5.00-4.00	Tin Brass	Tin

GT Male Lever Lock Connectors Unsealed

# Cavities	Connector	Color	Material	TPA	Stabilizer	Lever Lock
18	15336468	Black	PA66 HS IM	15304695	15418982	15317550
22	15317322	Lt.Gray	PA66 HS IM	15317323	15418983	15317321
30	15326762	Black	PA66 HS IM	15304912	15418984	15326799
40	15475869	Black	PA66 HS IM	15304841	15445756	15336387

SECTION NOTES:

- Due to rigid tolerances of connector cavities, it is critical to meet all crimp dimensions as specified.
- Special consideration must be used when applying terminals 15304713 and 15304725 due to cavity space limitations.

NOTE: Specifications in this catalog are for general reference only and are subject to change without notice. To verify product information, please contact a Delphi representative.

Peters de Laet
503-661-5088 – phone 503-661-5328 – fax
www.pdel.com

Lever Lock

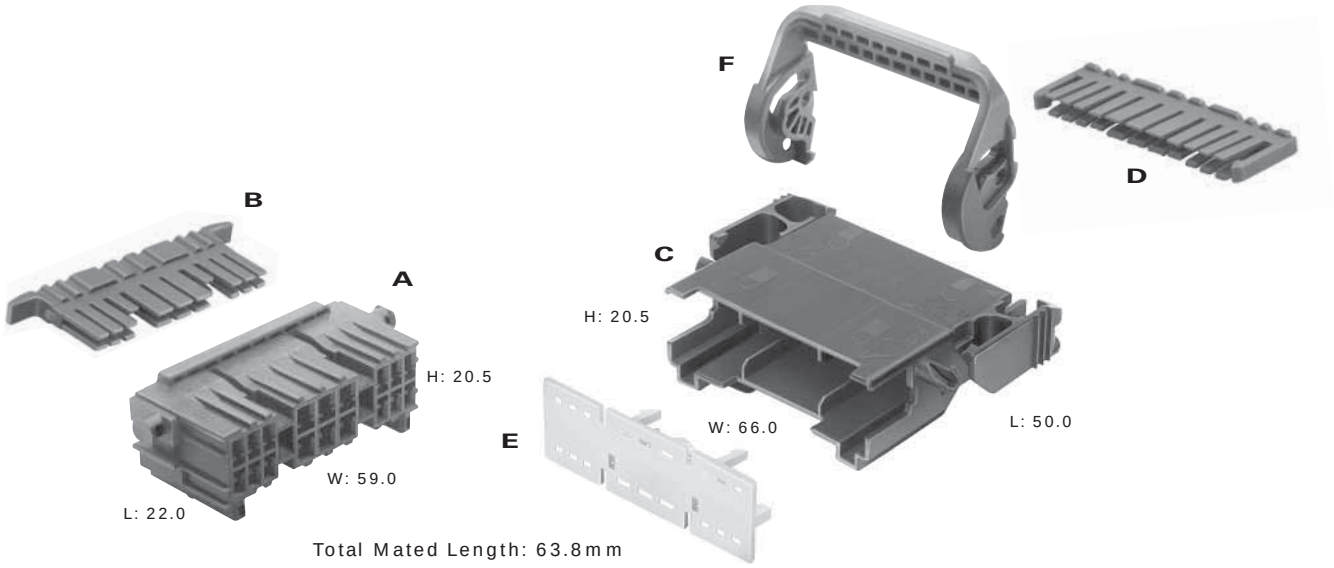

Total Mated Length: 63.8mm

A. Part No: 15304692 (Black)
15304690 (Md. Gray)

Description:	Connector 18F
Size:	22.0L x 20.5H x 59.0W
Material:	PA66 HS IM
Terminals:	See Page 1.32

B. Part No: 15304694

Description:	TPA
Color:	Blue
Material:	PBT

C. Part No: 15336468 (Black)
15336467 (Md. Gray)

Description:	Connector 18M
Size:	50.0L x 20.5H x 66.0W
Material:	PA66 HS IM
Terminals:	See Page 1.33
Clip:	12084149

D. Part No: 15304695

Description:	TPA
Color:	Blue
Material:	PBT

E. Part No: 15418982

Description:	Stabilizer
Color:	Natural
Material:	PA66 HS IM

F. Part No: 15317550

Description:	Lever Lock
Color:	Purple
Material:	PA66 HS IM

KEY:
- ◪ 150 SERIES
- ■ 280 SERIES

Mixed connectors feature a combination of different terminal cavities, as indicated by the key.

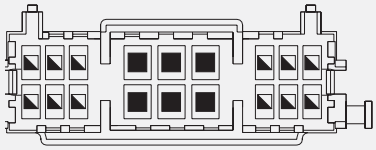

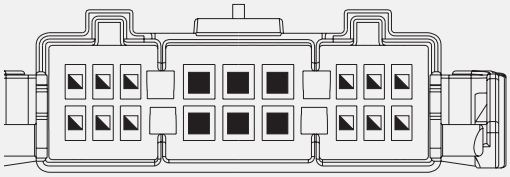

NOTE: Specifications in this catalog are for general reference only and are subject to change without notice. To verify product information, please contact a Delphi representative.

Peters de Laet
503-661-5088 – phone 503-661-5328 – fax
www.pdel.com

Lever Lock

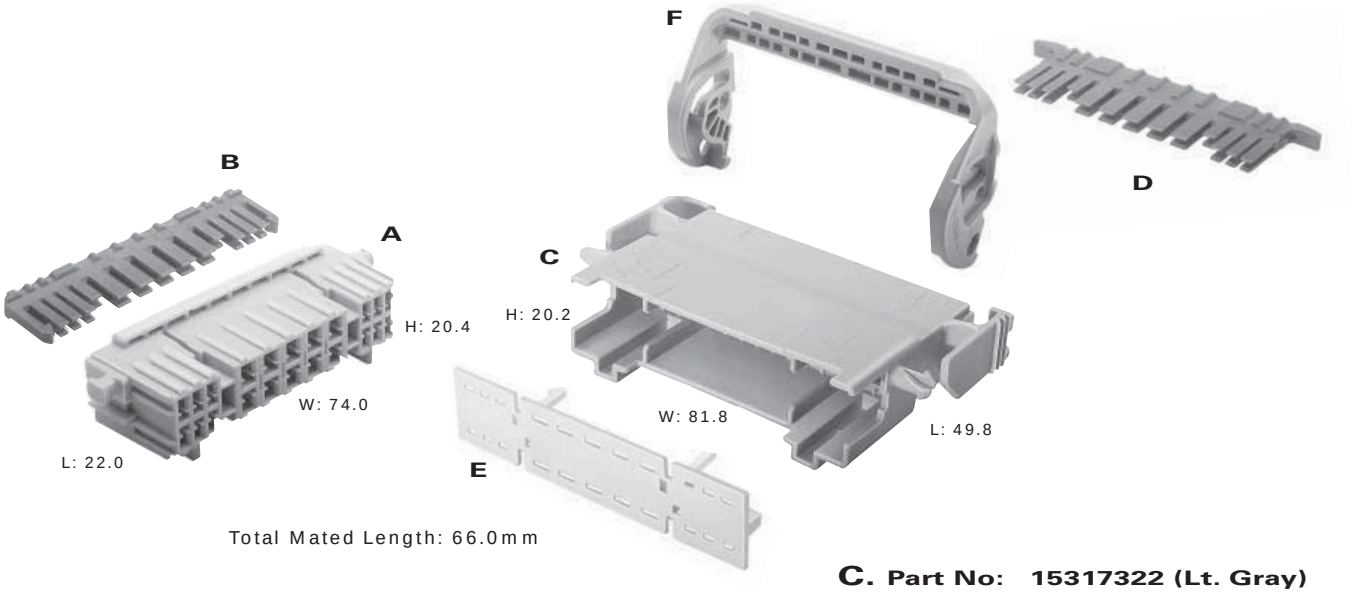

Total Mated Length: 66.0mm

A. Part No: 15317325 (Lt. Gray)
15326063 (Md. Gray)

Description:	Connector 22F
Size:	22.0L x 20.4H x 74.0W
Material:	PA66 HS IM
Terminals:	See Page 1.32

B. Part No: 15317326

Description:	TPA
Color:	Blue
Material:	PBT

C. Part No: 15317322 (Lt. Gray)
15326064 (Md. Gray)

Description:	Connector 22M
Size:	49.8L x 20.2H x 81.8W
Material:	PA66 HS IM
Terminals:	See Page 1.33
Clip:	12110290

D. Part No: 15317323

Description:	TPA
Color:	Blue
Material:	PBT

E. Part No: 15418983

Description:	Stabilizer
Color:	Natural
Material:	PA66 HS IM

F. Part No: 15317321

Description:	Lever Lock
Color:	Blue
Material:	PA66 HS IM

KEY:
- ◪ 150 SERIES
- ■ 280 SERIES

Mixed connectors feature a combination of different terminal cavities, as indicated by the key.

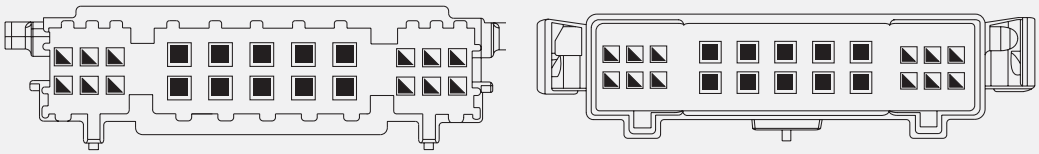

NOTE: Specifications in this catalog are for general reference only and are subject to change without notice. To verify product information, please contact a Delphi representative.

Peters de Laet
503-661-5088 – phone 503-661-5328 – fax
www.pdel.com

Lever Lock

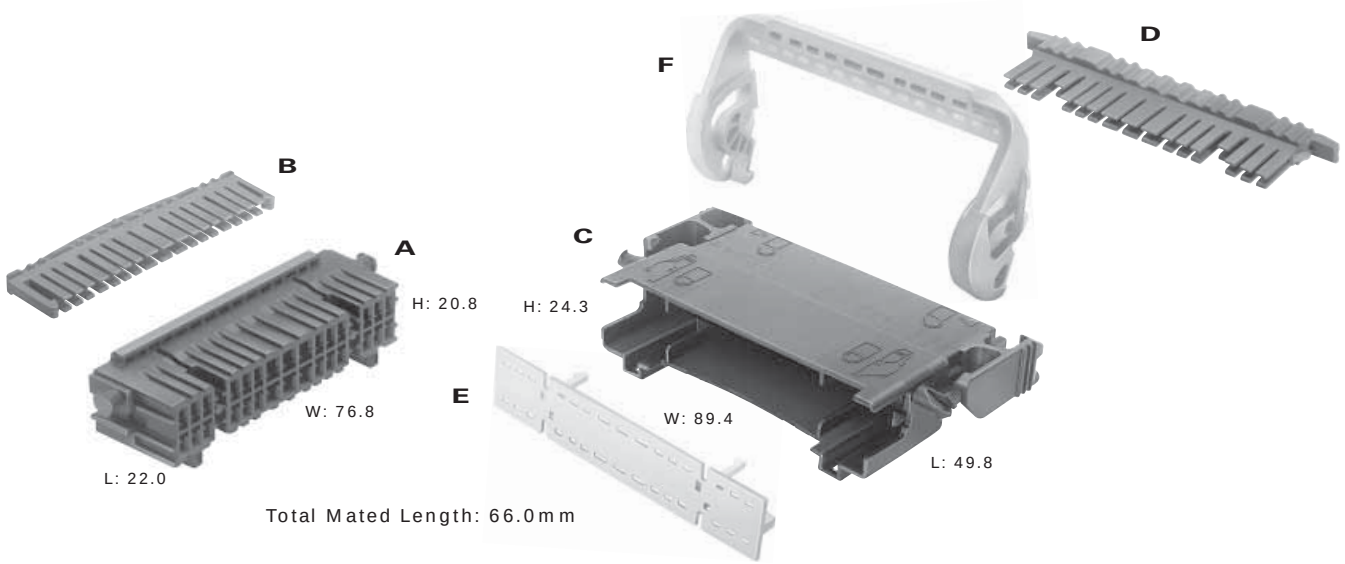

A. Part No: 15304908

Description:	Connector 30F
Size:	22.0L x 20.8H x 76.8W
Color:	Black
Material:	PA66 HS IM
Terminals:	See Page 1.32

B. Part No: 15304913

Description:	TPA
Color:	Blue
Material:	PBT

C. Part No: 15326762

Description:	Connector 30M
Size:	49.8L x 24.3H x 89.4W
Color:	Black
Material:	PA66 HS IM
Terminals:	See Page 1.33

D. Part No: 15304912

Description:	TPA
Color:	Blue
Material:	PBT

E. Part No: 15418984

Description:	Stabilizer
Color:	Natural
Material:	PA66 HS IM

F. Part No: 15326799

Description:	Lever Lock
Color:	Natural
Material:	PA66 HS IM 14% GF

KEY:

- ◪ 150 SERIES
- ■ 280 SERIES

Mixed connectors feature a combination of different terminal cavities, as indicated by the key.

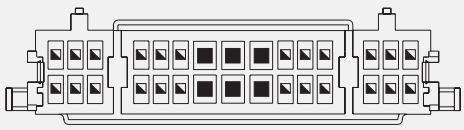

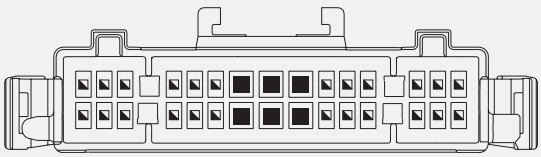

NOTE: Specifications in this catalog are for general reference only and are subject to change without notice. To verify product information, please contact a Delphi representative.

Peters de Laet
503-661-5088 – phone 503-661-5328 – fax
www.pdel.com

Lever Lock

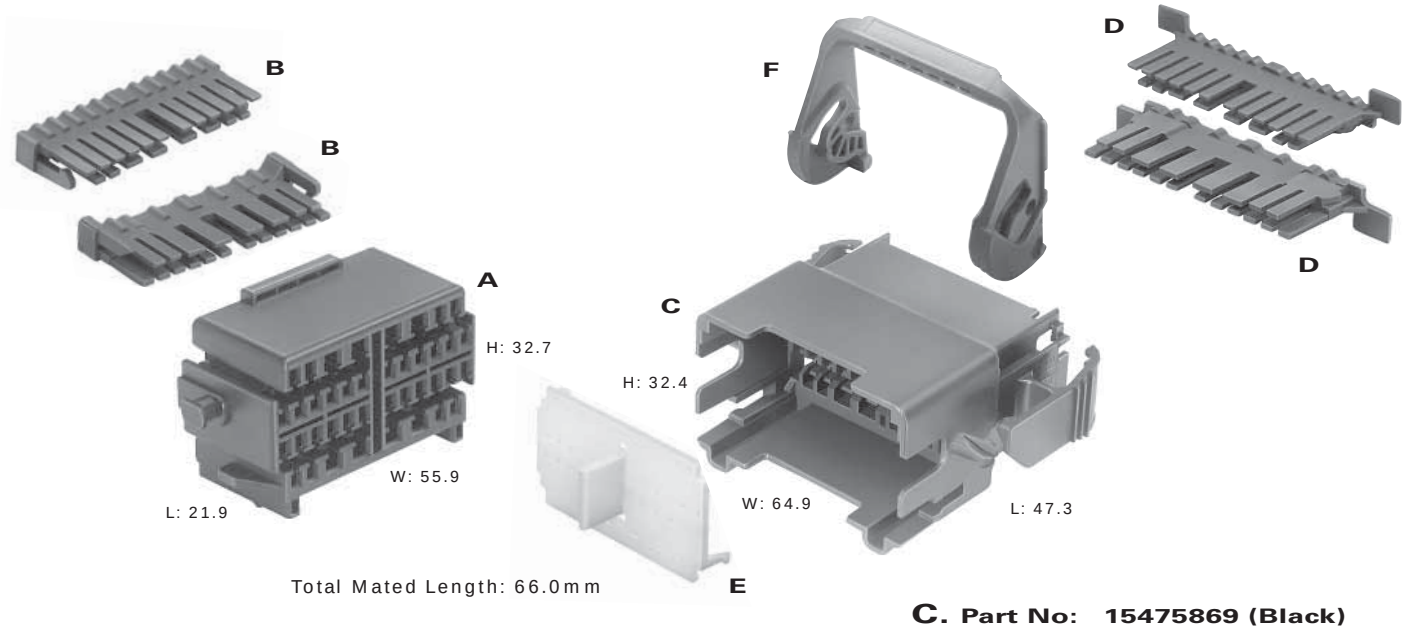

Total Mated Length: 66.0mm

A. Part No: 15359287 (Black)
15393744 (Gray)

Description:	Connector 40F
Size:	21.9L x 32.7H x 55.9W
Material:	PA66 HS IM
Terminals:	See Page 1.32

B. Part No: 15304842

Description:	TPA
Number Req:	2
Color:	Blue
Material:	PBT

C. Part No: 15475869 (Black)
15475870 (Gray)

Description:	Connector 40M
Size:	47.3L x 32.4H x 64.9W
Material:	PA66 HS IM
Terminals:	See Page 1.33

D. Part No: 15304841

Description:	TPA
Number Req:	2
Color:	Blue
Material:	PBT

E. Part No: 15445756

Description:	Stabilizer
Color:	Blue
Material:	PA66 HS IM

F. Part No: 15336387

Description:	Lever Lock
Color:	Natural
Material:	PA66 HS IM 14% GF

KEY:
- ◪ 150 SERIES
- ■ 280 SERIES

Mixed connectors feature a combination of different terminal cavities, as indicated by the key.

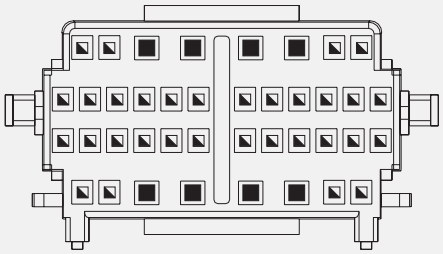

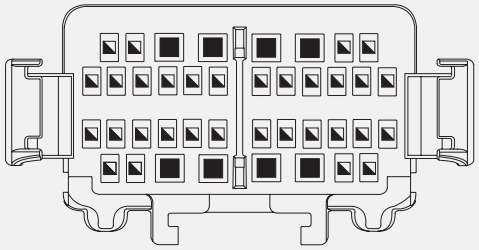

NOTE: Specifications in this catalog are for general reference only and are subject to change without notice. To verify product information, please contact a Delphi representative.

Peters de Laet
503-661-5088 – phone 503-661-5328 – fax
www.pdel.com

Lever Lock

Cross Sectional View

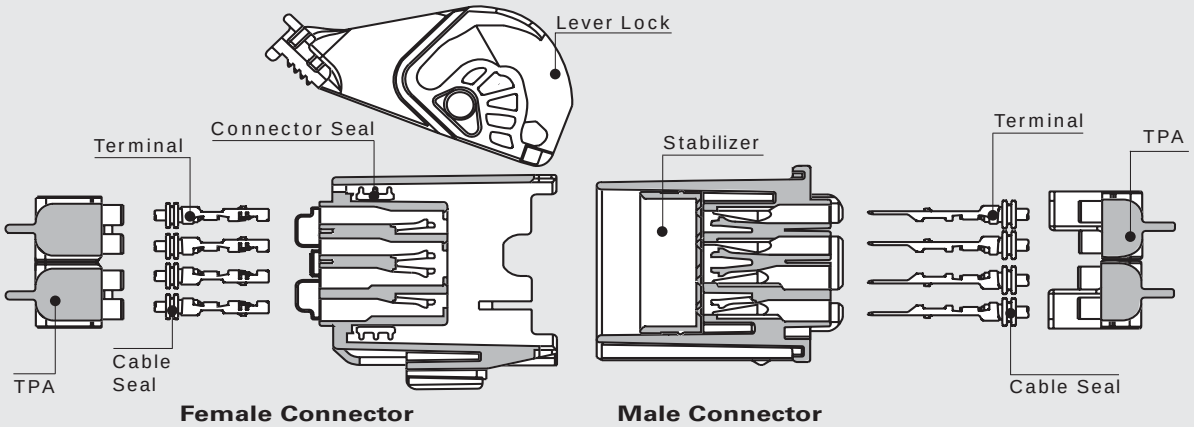

GT 150 Female Terminals Sealed

Part #	Cable Range (mm²)	Material	Plating
12191818	0.50-0.35	Tin Brass	Tin
12191819	1.00-0.75	Tin Brass	Tin

GT 280 Female Terminals Sealed

Part # Dia. 5.2 (mm)	Part # Dia. 5.8 (mm)	Cable Range (mm²)	Material	Plating
15304715	15304718	0.50-0.35	Tin Brass	Tin
15304716	15304719	1.00-0.75	Tin Brass	Tin
15304717	–	2.00-1.50	Tin Brass	Tin
–	15304720 †	3.00-1.50	Tin Brass	Tin
–	15326004	5.00-4.00	Beryllium Copper	Tin

GT 150 Cable Seals

Reel Part #	Loose Part #	Cable Dia.	Material	Color
12191152	15366021	1.20-1.90	Silicone	White
12191153	15366060	1.86-2.40	Silicone	Blue

GT 280 Cable Seals

	Reel Part #	Loose Part #	Cable Dia.	Material	Color
280 5.8mm	12191221	15366065	1.20-1.85	Silicone	Orange
	12191222	15366066	1.86-2.25	Silicone	Yellow
	12191223	15366067	2.50-3.20	Silicone	Tan
	–	12191235	3.40-3.90	Silicone	Purple
	–	15336674†	2.70-3.20	Silicone	Blue
280 5.2mm	12191156	15366063	1.20-1.85	Silicone	Gray
	12191157	15366064	1.86-2.25	Silicone	Purple
	12191154	15366061	2.09-2.66	Silicone	Dk. Red

† Note: If cable seal 15336674 is used with terminal 15304720, connector cavity needs to be designed with 5.2mm diameter sealing surface.

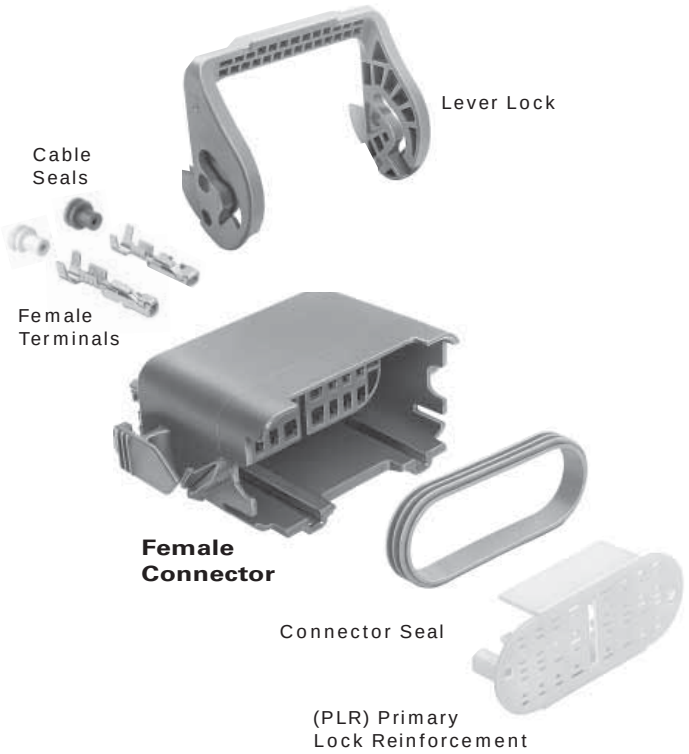

GT Female Lever Lock Connectors Sealed

# Cavities	Connector	Color	Material	PLR	TPA	Connector Seal	Lever Lock
24	15366099	Black	PA6 10%GF & 20% GB	15373422	–	15336177	15369322
38	15443822	Black	PA66 HS IM	–	15304904	15304905	15336267

NOTE: Specifications in this catalog are for general reference only and are subject to change without notice. To verify product information, please contact a Delphi representative.

Peters de Laet
503-661-5088 – phone 503-661-5328 – fax
www.pdel.com

Lever Lock

Sealed System Application Information

GT 150 Series Terminals – Tin Plated

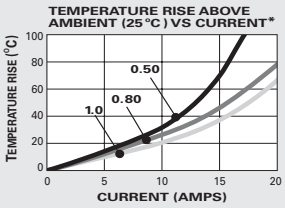

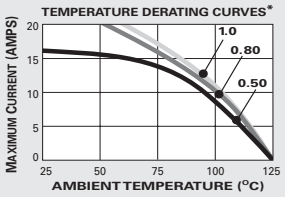

CABLE RANGE (mm²): 0.35-1.0
CURRENT RANGE (AMPS): 0-15
TEMP RANGE °C: ..... -40 to 125
RESISTANCE: ..... <10mΩ@20mV

VOLTAGE DROP: ... <10.0mV/amp
CENTERLINE SPACING (mm): 4.5
BLADE WIDTH (mm): 1.5

280 Series Terminals – Tin Plated

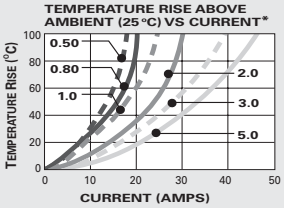

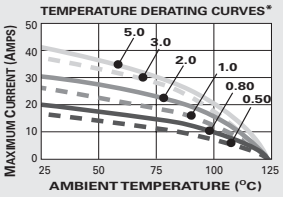

CABLE RANGE (mm²): 0.35-5.0
CURRENT RANGE (AMPS): 0-25
TEMP RANGE °C: ..... -40 to 125
RESISTANCE: ..... <10mΩ@20mV

VOLTAGE DROP: ..... <4.0mV/amp
CENTERLINE SPACING (mm): 6.5
BLADE WIDTH (mm): 2.8

*The test data are based on single circuits in free space and were generated using a "Lumped Resistance" model. This model does not account for all of the variables that would be present in an actual application. For actual product performance, contact your regional support representative.

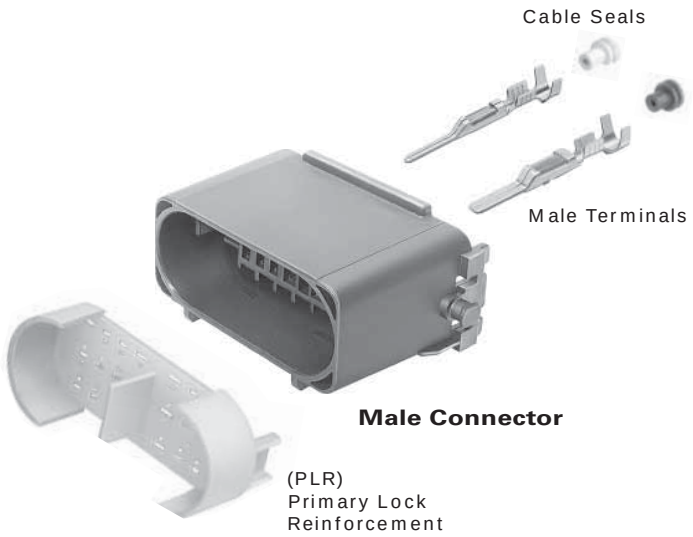

GT 150 Male Terminals Sealed

Part #	Cable Range (mm²)	Material	Plating
15326268	0.50-0.35	Tin Brass	Tin
15326269	1.00-0.75	Tin Brass	Tin

GT 280 Male Terminals Sealed

Part # Dia. 5.2 (mm)	Part # Dia. 5.8 (mm)	Cable Range (mm²)	Material	Plating
15304727	15304730	0.50-0.35	Tin Brass	Tin
15304728	15304731	1.00-0.75	Tin Brass	Tin
–	15304732	3.00-1.50	Tin Brass	Tin
15304729	–	2.00-1.50	Tin Brass	Tin

GT 150 Cavity Plug*

Part #	Cavity Diameter	Material	Color
15305171	4.0mm	Silicone	Green

*Cavity plugs seal unused female and male cavities.

SECTION NOTES:

- Due to rigid tolerances of connector cavities, it is critical to meet all crimp dimensions as specified.

GT Male Lever Lock Connectors Sealed

# Cavities	Connector	Color	Material	PLR	TPA	Stabilizer
24	15336173	Black	PA66 HS IM 14% GF	15373421	–	–
38	15317380	Black	PA66 HS IM	–	15304903	15488824

GT 280 Cavity Plug*

Part #	Cavity Diameter	Material	Color
12059168	5.2mm	Silicone	Dk. Red
15305170	5.8mm	Silicone	White

*Cavity plugs seal unused female and male cavities.

NOTE: Specifications in this catalog are for general reference only and are subject to change without notice. To verify product information, please contact a Delphi representative.

Peters de Laet
503-661-5088 – phone 503-661-5328 – fax
www.pdel.com

Lever Lock

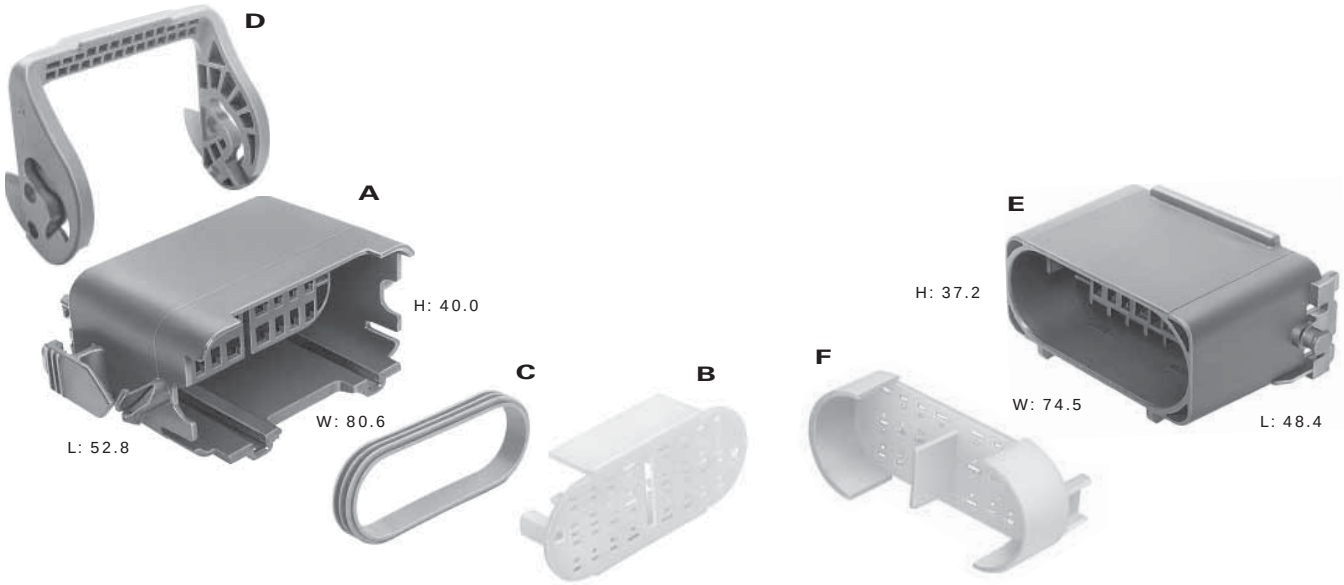

Total Mated Length: 72.0mm

A. Part No: 15366099

Description:	Connector 24F
Size:	52.8L x 40.0H x 80.6W
Color:	Black
Material:	PA6 10% GF & 20% GB
Terminals:	See Page 1.38
Seals/Plugs:	See Page 1.38, 1.39

B. Part No: 15373422

Description:	PLR
Color:	Natural
Material:	PA66 HS IM

C. Part No: 15336177

Description:	Connector Seal
Color:	Green
Material:	Silicone

D. Part No: 15369322

Description:	Lever Lock
Color:	Md. Gray
Material:	PA66 HS IM

E. Part No: 15336173

Description:	Connector 24M
Size:	48.4L x 37.2H x 74.5W
Color:	Black
Material:	PA66 HS IM 14% GF
Terminals:	See Page 1.39
Seals/Plugs:	See Page 1.38, 1.39

F. Part No: 15373421

Description:	PLR
Color:	Md. Gray
Material:	PA66 HS IM

KEY:

- ◪ 150 SERIES
- ■ 280 SERIES

Mixed connectors feature a combination of different terminal cavities, as indicated by the key.

System Note:
For 280 Series sealed cavities use 5.8mm cavity diameter terminals and seals from pages 1.38 and 1.39.

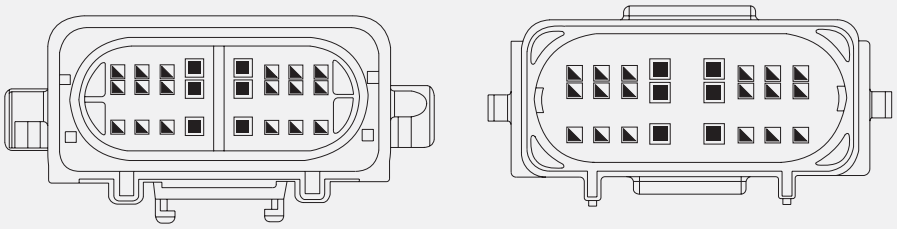

NOTE: Specifications in this catalog are for general reference only and are subject to change without notice. To verify product information, please contact a Delphi representative.

Peters de Laet
503-661-5088 – phone 503-661-5328 – fax
www.pdel.com

Lever Lock

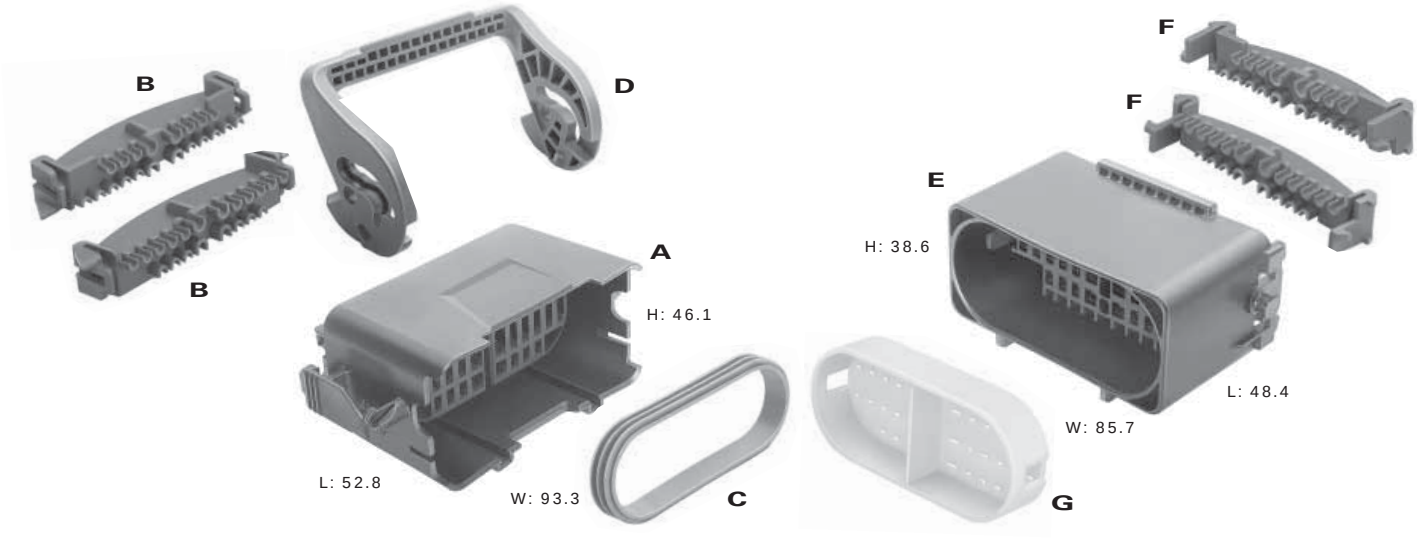

Total Mated Length: 91.1mm

A. Part No: 15443822

Description:	Connector 38F
Size:	52.8L x 46.1H x 93.3W
Color:	Black
Material:	PA66 HS IM
Terminals:	See Page 1.38
Seals/Plugs:	See Page 1.38, 1.39

B. Part No: 15304904

Description:	TPA
Number Req:	2
Color:	Lt. Gray
Material:	PBT

C. Part No: 15304905

Description:	Connector Seal
Color:	Green
Material:	Silicone

D. Part No: 15336267

Description:	Lever Lock
Color:	Dk. Gray
Material:	PA66 HS IM 14% GF

E. Part No: 15317380

Description:	Connector 38M
Size:	48.4L x 38.6H x 85.7W
Color:	Black
Material:	PA66 HS IM
Terminals:	See Page 1.39
Seals/Plugs:	See Page 1.38, 1.39
Clip:	12084149

F. Part No: 15304903

Description:	TPA
Number Req:	2
Color:	Lt. Gray
Material:	PBT

G. Part No: 15488824

Description:	Stabilizer
Color:	Natural
Material:	PA66 HS IM

KEY:

- ◪ 150 SERIES
- ■ 280 SERIES
- ● Blocked Cavity

Mixed connectors feature a combination of different terminal cavities, as indicated by the key.

System Note:
For 280 Series sealed cavities use 5.2mm cavity diameter terminals and seals from pages 1.38 and 1.39.

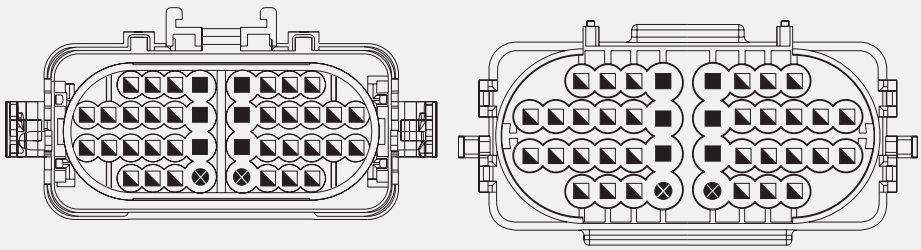

NOTE: Specifications in this catalog are for general reference only and are subject to change without notice. To verify product information, please contact a Delphi representative.

Peters de Laet
503-661-5088 – phone 503-661-5328 – fax
www.pdel.com

Lever Lock
Flexible Printed Circuit Application

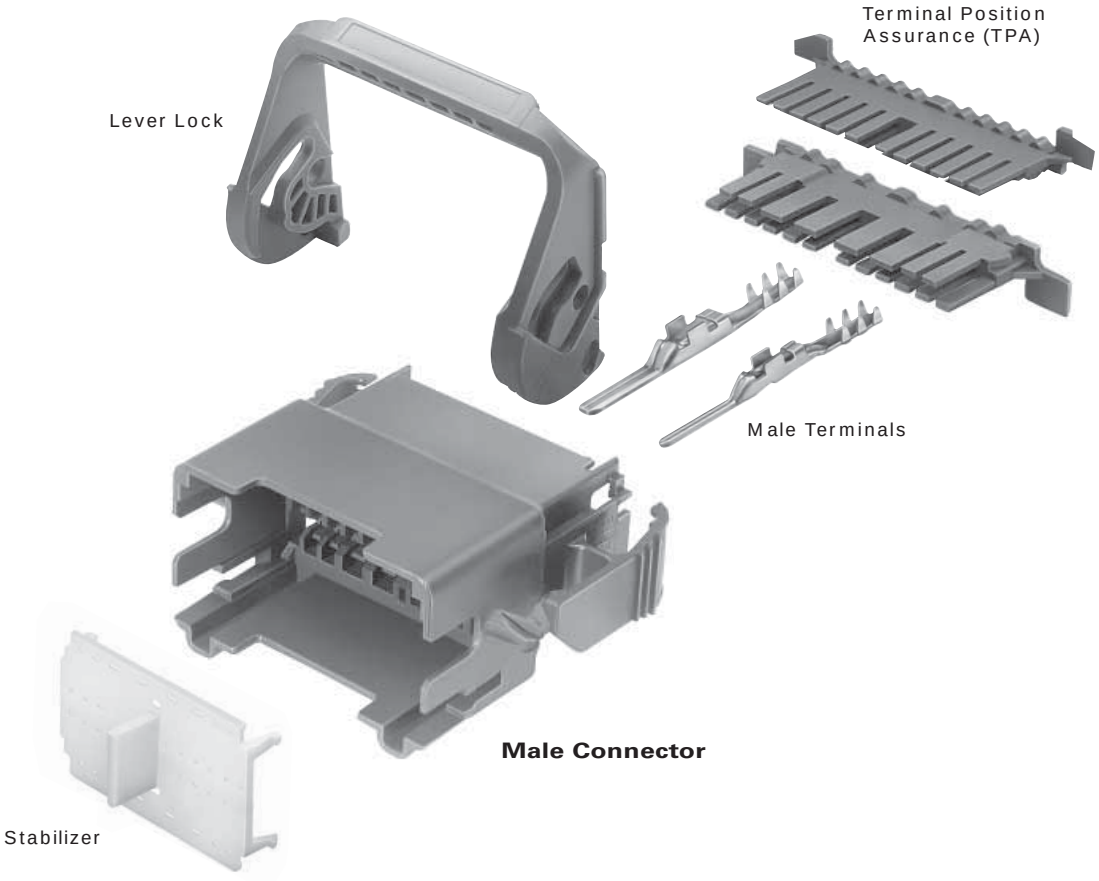

GT Male Lever Lock Connectors Unsealed						
# Cavities	**Connector**	**Color**	**Material**	**TPA**	**Stabilizer**	**Lever Lock**
30	15317735	Brown	PA66 HS IM	15317828	15418984	15326799
40	15317694	Brown	PA66 HS IM	15355380	15326177	15336387

GT 150 Male Terminals Unsealed		
Part #	**Material**	**Plating**
15317814	Tin Brass	Tin

GT 280 Male Terminals Unsealed		
Part #	**Material**	**Plating**
15317815	Tin Brass	Tin

SECTION NOTES:

- Flex Circuit Systems mate to conventional female connection systems.

NOTE: Specifications in this catalog are for general reference only and are subject to change without notice. To verify product information, please contact a Delphi representative.

Peters de Laet
503-661-5088 – phone 503-661-5328 – fax
www.pdel.com

Lever Lock
Flexible Printed Circuit Application

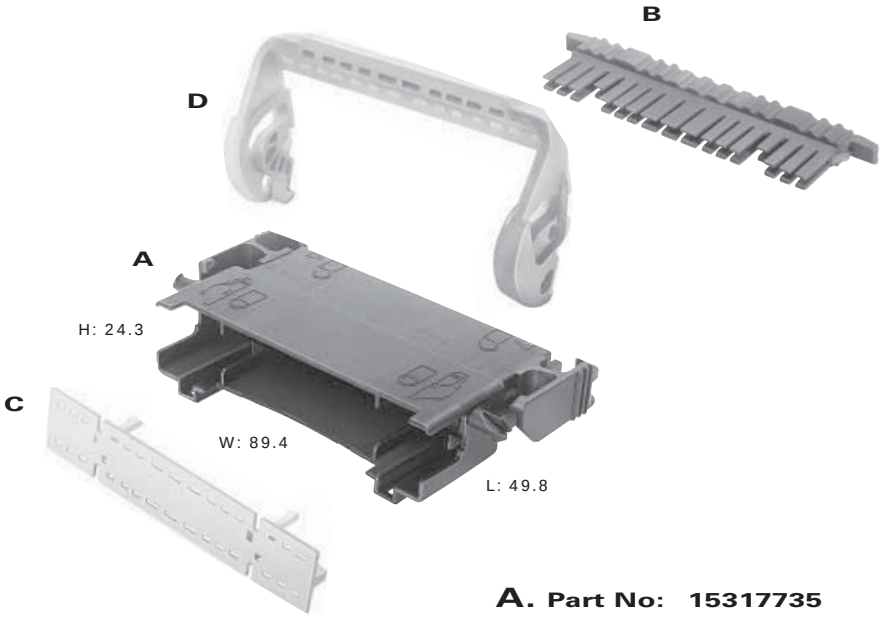

A. Part No: 15317735

Description:	Connector 30M
Size:	49.8L x 24.3H x 89.4W
Color:	Brown
Material:	PA66 HS IM
Terminals:	See Page 1.42

B. Part No: 15317828

Description:	TPA
Color:	Green
Material:	PBT

C. Part No: 15418984

Description:	Stabilizer
Color:	Natural
Material:	PA66 HS IM

D. Part No: 15326799

Description:	Lever Lock
Color:	Natural
Material:	PA66 HS IM 14% GF

SYSTEM NOTES:

- Conventional mating connector
  15326416 (Female) Brown
  15304913 (TPA) Blue
- Terminals See Page 1.32.

KEY:

◪ 150 SERIES
■ 280 SERIES

Mixed connectors feature a combination of different terminal cavities, as indicated by the key.

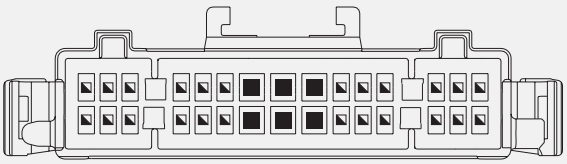

NOTE: Specifications in this catalog are for general reference only and are subject to change without notice. To verify product information, please contact a Delphi representative.

Peters de Laet
503-661-5088 – phone 503-661-5328 – fax
www.pdel.com

Lever Lock
Flexible Printed Circuit Application

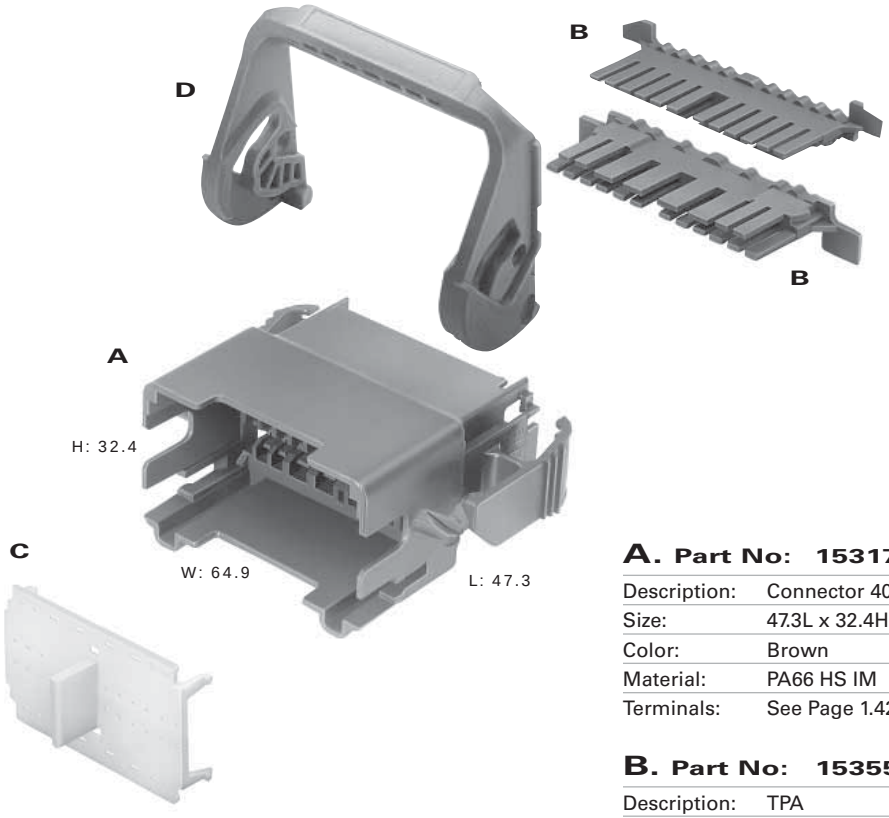

A. Part No: 15317694

Description:	Connector 40M
Size:	47.3L x 32.4H x 64.9W
Color:	Brown
Material:	PA66 HS IM
Terminals:	See Page 1.42

B. Part No: 15355380

Description:	TPA
Number Req:	2
Color:	Green
Material:	PBT HS IM

C. Part No: 15326177

Description:	Stabilizer
Color:	Natural
Material:	PA66 HS IM

D. Part No: 15336387

Description:	Lever Lock
Color:	Natural
Material:	PA66 HS IM 14% GF

SYSTEM NOTES:

- Conventional mating connector
  15305218 (Female) Brown
  15304342 (TPA) Blue
- Terminals See Page 1.32.

KEY:

- ◪ 150 SERIES
- ■ 280 SERIES

Mixed connectors feature a combination of different terminal cavities, as indicated by the key.

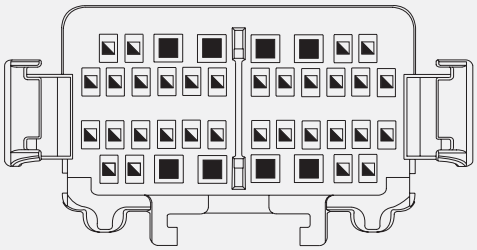

NOTE: Specifications in this catalog are for general reference only and are subject to change without notice. To verify product information, please contact a Delphi representative.

Peters de Laet
503-661-5088 – phone 503-661-5328 – fax
www.pdel.com

150

Available in device and in-line connections for vehicle applications, Metri-Pack 150 Series connectors can meet or exceed the requirements for most marine, appliance, and industrial control applications.

Ideally suited for limited space applications that do not require environmental protection, Metri-Pack 150 Series products are extremely versatile.

Available in device and in-line connections for underhood vehicle applications, Metri-Pack 150 Series sealed connectors can meet or exceed the requirements for most marine, appliance, and industrial control applications.

Utilizing triple-rib peripheral silicone rubber seals, Metri-Pack 150 Series sealed systems are ideally suited for critical, low-energy electronic applications that require protection from environmental hazards.

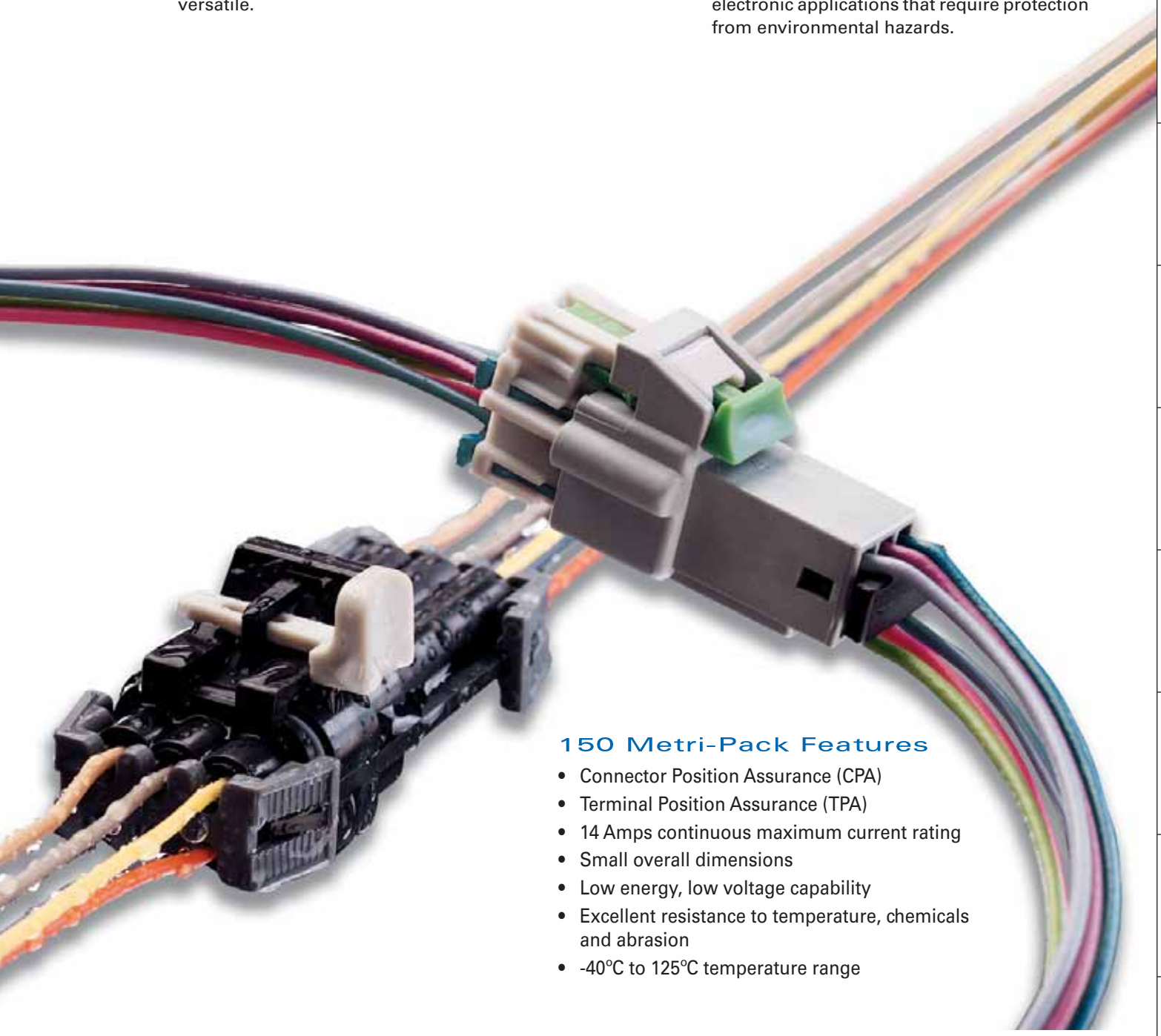

150 Metri-Pack Features

- Connector Position Assurance (CPA)
- Terminal Position Assurance (TPA)
- 14 Amps continuous maximum current rating
- Small overall dimensions
- Low energy, low voltage capability
- Excellent resistance to temperature, chemicals and abrasion
- -40°C to 125°C temperature range

Peters de Laet
503-661-5088 – phone 503-661-5328 – fax
www.pdel.com

150

Cross Sectional View

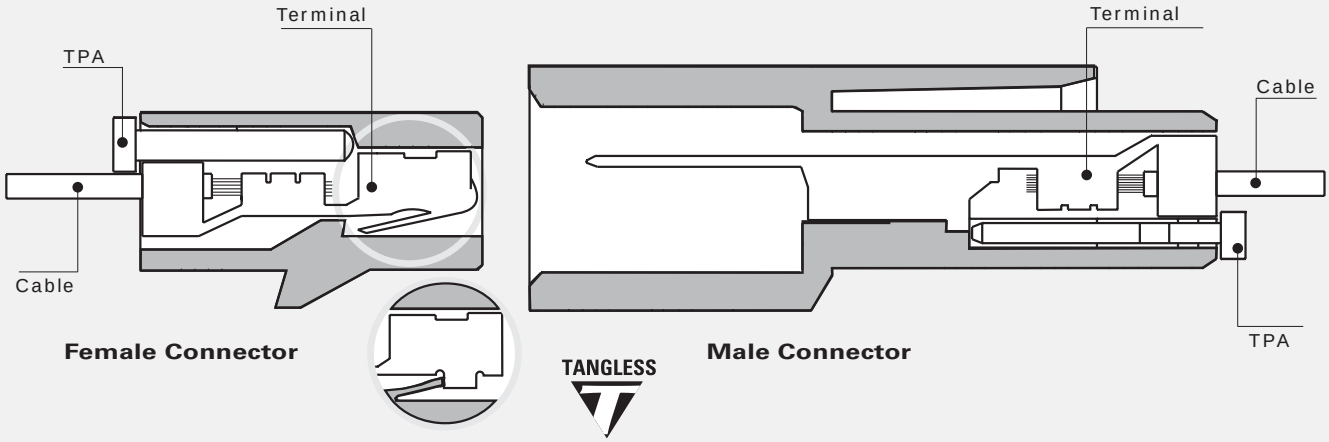

TPA
(Terminal Position
Assurance)

Female Terminal

CPA
(Connector
Position
Assurance)

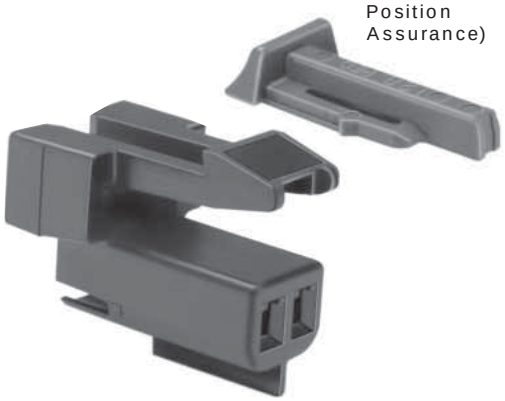

Female Connector

150 Female Terminals Unsealed

Part #	Cable Range (mm²)	Material	Plating
12047767	1.0-0.80	Silicon Bronze	Tin
12064971	0.50-0.35	Silicon Bronze	Tin

TANGLESS

150 Tangless Female Terminals Unsealed

Part #	Cable Range (mm²)	Material	Plating
12129484	1.0-0.80	Silicon Bronze	Tin
12129373	0.5-0.35	Silicon Bronze	Tin

150 Female Connectors Unsealed

# Cavities	Connector	Color	Material	TPA
1	12047682	Black	PA66 HS IM	–
2	12047662	Black	PA66 HS IM	15324070
2	12052832	Black	PA66 HS IM	15324070
3	12047781	Black	PA66 HS IM	12047783
3	12064758	Black	PA66 HS IM	12047783
4	12047785	Black	PA66 HS IM	15324070
4	12064760	Black	PA66 HS IM	15324070
4	12092162	Black	PA66 HS IM	12092164
6	12064762	Lt. Gray	PA66 HS IM	12064764
8	12047886	Black	PA66 HS IM	12045689
8	12064766	Blue	PBT	12064768
10	12064769	Cream	PA66 HS IM	12064771

NOTE: Specifications in this catalog are for general reference only and are subject to change without notice. To verify product information, please contact a Delphi representative.

Peters de Laet
503-661-5088 – phone 503-661-5328 – fax
www.pdel.com

150

Unsealed System Application Information

CABLE RANGE (mm²): 0.35-1.0

CURRENT RANGE (AMPS): 0-14

TEMP RANGE °C: ..... -40 to 125

RESISTANCE: ..... <10mΩ@20mV

VOLTAGE DROP: .... <10.0 mV/amp

CENTERLINE SPACING (mm): 3.5

BLADE WIDTH (mm): 1.5

150 Series Terminals – Tin Plated

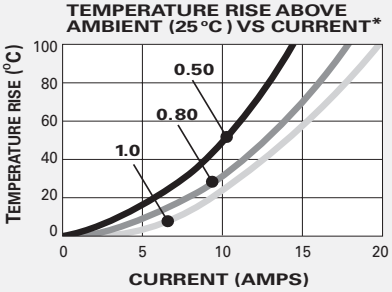

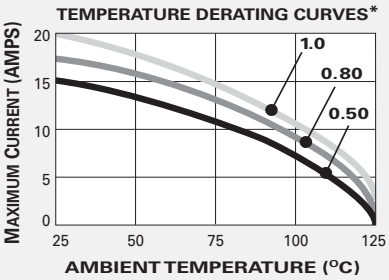

*The test data are based on single circuits in free space and were generated using a "Lumped Resistance" model. This model does not account for all of the variables that would be present in an actual application. For actual product performance, contact your regional support representative.

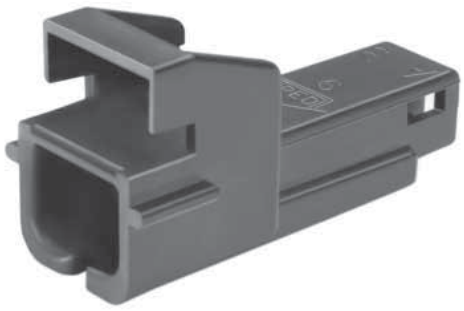

Male Connector

Male Terminal

TPA
(Terminal Position Assurance)

150 Male Connectors Unsealed

# Cavities	Connector	Color	Material	TPA
1	12047683	Black	PA66 HS IM	–
2	12047663	Black	PA66 HS IM	12047665
2	12052833	Black	PA66 HS IM	12047665
3	12047782	Black	PA66 HS IM	12047784
3	12064759	Black	PBT	12047784
4	12047786	Black	PA66 HS IM	12047787
4	12064761	Black	PBT	12047787
4	12092163	Black	PA66 HS IM	12092164
6	12064763	Gray	PBT	12064765
8	12045688	Black	PA66 HS IM	12045690
8	12064767	Blue	PBT	12045690
10	12064770	Cream	PA66 HS IM	12064772

150 Male Terminals Unsealed

Part #	Cable Range (mm²)	Material	Plating
12047581	0.80-0.50	Tin Brass	Tin
12059894	0.50-0.35	Tin Brass	Tin

SECTION NOTES:

- Due to rigid tolerances of connector cavities, it is critical to meet all crimp dimensions as specified.
- Female connections for device applications, see page 2.20.

NOTE: Specifications in this catalog are for general reference only and are subject to change without notice. To verify product information, please contact a Delphi representative.

Peters de Laet
503-661-5088 – phone 503-661-5328 – fax
www.pdel.com

150

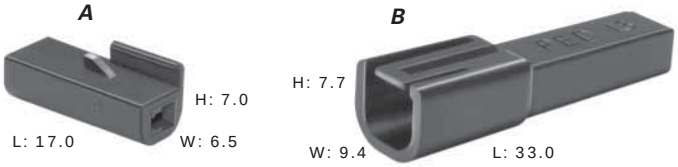

Total Mated Length: 38.1mm

A. Part No: 12047682

Description:	Connector 1F
Size:	17.0L x 7.0H x 6.5W
Color:	Black
Material:	PA66 HS IM
Terminals:	See Page 2.2

B. Part No: 12047683

Description:	Connector 1M
Size:	33.0L x 7.7H x 9.4W
Color:	Black
Material:	PA66 HS IM
Terminals:	See Page 2.3

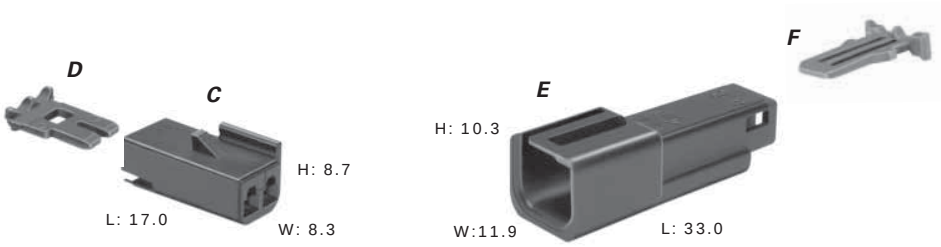

Total Mated Length: 41.0mm

C. Part No: 12047662 (Black)
12059249 (Cream)

Description:	Connector 2F
Size:	17.0L x 8.7H x 8.3W
Material:	PA66 HS IM
Terminals:	See Page 2.2

D. Part No: 15324070

Description:	TPA
Color:	Lt. Gray
Material:	PA66 HS IM

E. Part No: 12047663 (Black)
12059250 (Cream)

Description:	Connector 2M (Clip Slot)
Size:	33.0L x 10.3H x 11.9W
Material:	PA66 HS IM
Terminals:	See Page 2.3

F. Part No: 12047665

Description:	TPA
Color:	Md. Gray
Material:	PA66 HS IM

NOTE: Specifications in this catalog are for general reference only and are subject to change without notice. To verify product information, please contact a Delphi representative.

Peters de Laet
503-661-5088 – phone 503-661-5328 – fax
www.pdel.com

150

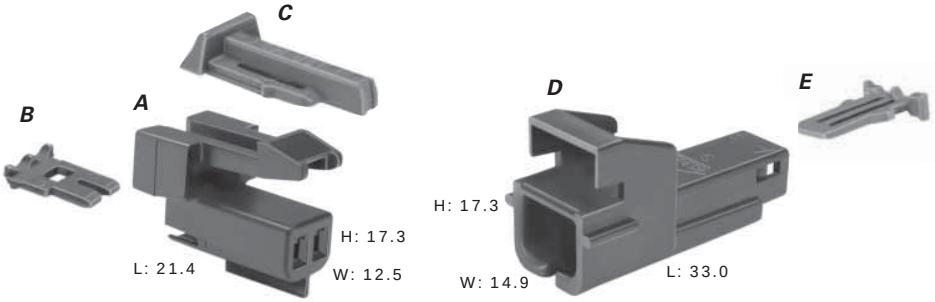

Total Mated Length: 43.1mm

A. Part No: 12052832

Description:	Connector 2F
Size:	21.4L x 17.3H x 12.5W
Color:	Black
Material:	PA66 HS IM
Terminals:	See Page 2.2

B. Part No: 15324070

Description:	TPA
Color:	Lt. Gray
Material:	PA66 HS IM

C. Part No: 12052834

Description:	CPA
Color:	Green
Material:	PP

D. Part No: 12052833

Description:	Connector 2M (Clip Slot)
Size:	33.0L x 17.3H x 14.9W
Color:	Black
Material:	PA66 HS IM
Terminals:	See Page 2.3

E. Part No: 12047665

Description:	TPA
Color:	Md. Gray
Material:	PA66 HS IM

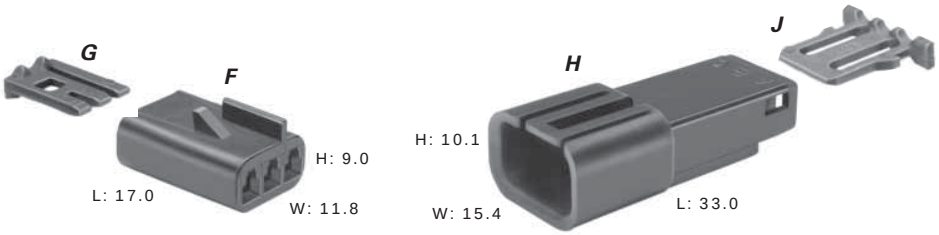

Total Mated Length: 41.3mm

F. Part No: 12065422 (Cream) 12047781 (Black)

Description:	Connector 3F
Size:	17.0L x 9.0H x 11.8W
Material:	PA66 HS IM
Terminals:	See Page 2.2

G. Part No: 12047783

Description:	TPA
Color:	Md. Gray
Material:	PA66 HS IM

H. Part No: 12065423 (Cream) 12047782 (Black)

Description:	Connector 3M (Clip Slot)
Size:	33.0L x 10.1H x 15.4W
Material:	PA66 HS IM
Terminals:	See Page 2.3

J. Part No: 12047784

Description:	TPA
Color:	Gray
Material:	PBT

NOTE: Specifications in this catalog are for general reference only and are subject to change without notice. To verify product information, please contact a Delphi representative.

150

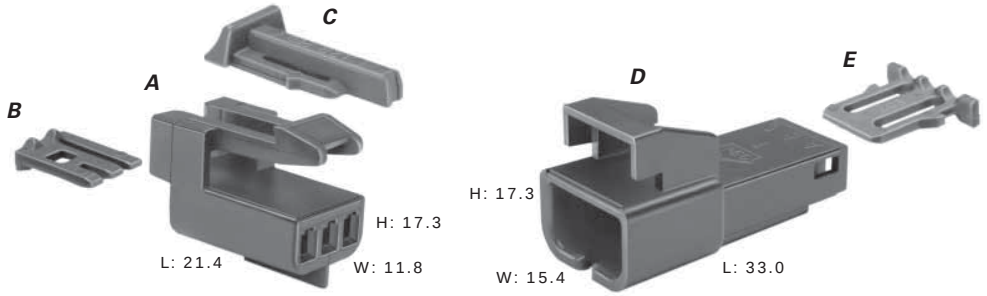

Total Mated Length: 47.1mm

A. Part No: 12064758

Description:	Connector 3F
Size:	21.4L x 17.3H x 11.8W
Color:	Black
Material:	PA66 HS IM
Terminals:	See Page 2.2

B. Part No: 12047783

Description:	TPA
Color:	Md. Gray
Material:	PA66 HS IM

C. Part No: 12052834

Description:	CPA
Color:	Green
Material:	PP

D. Part No: 12064759

Description:	Connector 3M (Clip Slot)
Size:	33.0L x 17.3H x 15.4W
Color:	Black
Material:	PBT
Terminals:	See Page 2.3

E. Part No: 12047784

Description:	TPA
Color:	Gray
Material:	PBT

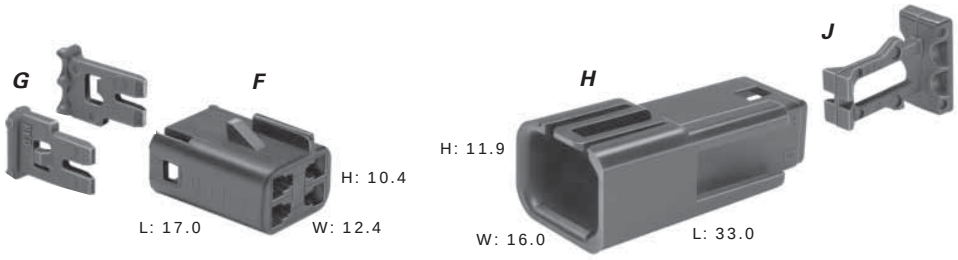

Total Mated Length: 42.2mm

F. Part No: 12089248 (Cream)
12047785 (Black)

Description:	Connector 4F
Size:	17.0L x 10.4H x 12.4W
Material:	PA66 HS IM
Terminals:	See Page 2.2

G. Part No: 15324070

Description:	TPA
Number Req:	2
Color:	Lt. Gray
Material:	PA66 HS IM

H. Part No: 12089247 (Cream)
12047786 (Black)

Description:	Connector 4M (Clip Slot)
Size:	33.0L x 11.9H x 16.0W
Material:	PA66 HS IM
Terminals:	See Page 2.3

J. Part no: 12047787

Description:	TPA
Color:	Blue
Material:	PBT

NOTE: Specifications in this catalog are for general reference only and are subject to change without notice. To verify product information, please contact a Delphi representative.

Peters de Laet
503-661-5088 – phone 503-661-5328 – fax
www.pdel.com

150

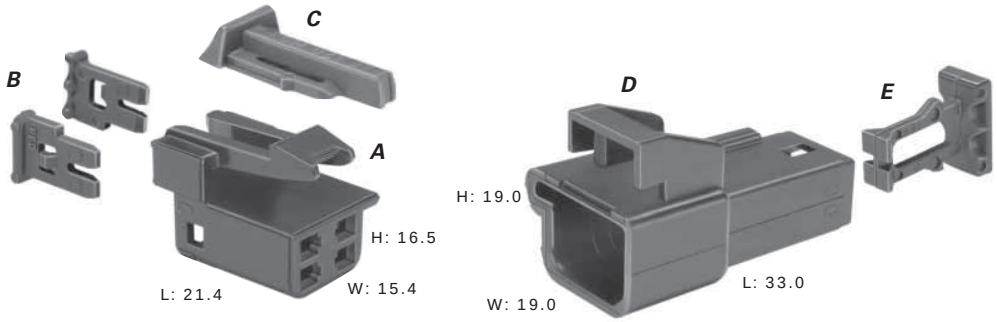

Total Mated Length: 47.9mm

A. Part No: 12064760

Description:	Connector 4F
Size:	21.4L x 16.5H x 15.4W
Color:	Black
Material:	PA66 HS IM
Terminals:	See Page 2.2

B. Part No: 15324070

Description:	TPA
Number Req:	2
Color:	Lt. Gray
Material:	PA66 HS IM

C. Part No: 12052834

Description:	CPA
Color:	Green
Material:	PP

D. Part No: 12064761

Description:	Connector 4M (Clip Slot)
Size:	33.0L x 19.0H x 19.0W
Color:	Black
Material:	PBT
Terminals:	See Page 2.3

E. Part No: 12047787

Description:	TPA
Color:	Blue
Material:	PBT

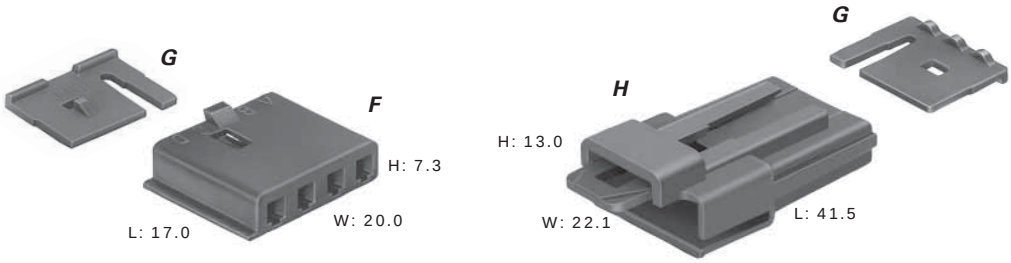

Total Mated Length: 43.3mm

F. Part No: 12092162

Description:	Connector 4F
Size:	17.0L x 7.3H x 20.0W
Color:	Black
Material:	PA66 HS IM
Terminals:	See Page 2.2

G. Part No: 12092164

Description:	TPA
Number Req:	2
Color:	Blue
Material:	PA66 HS IM

H. Part No: 12092163

Description:	Connector 4M (Clip Slot)
Size:	41.5L x 13.0H x 22.1W
Color:	Black
Material:	PA66 HS IM
Terminals:	See Page 2.3

NOTE: Specifications in this catalog are for general reference only and are subject to change without notice. To verify product information, please contact a Delphi representative.

Peters de Laet
503-661-5088 – phone 503-661-5328 – fax
www.pdel.com

150

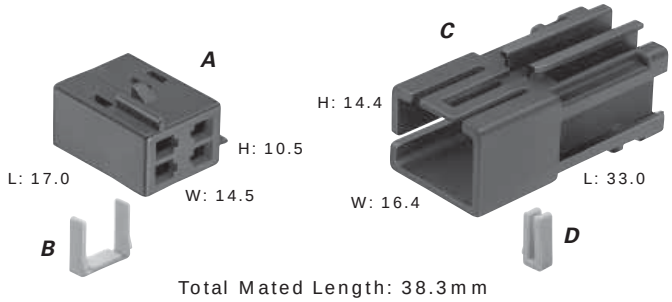

Total Mated Length: 38.3mm

A. Part No: 12131283

Description:	Connector 4F
Size:	17.0L x 10.5H x 14.5W
Color:	Black
Material:	PA6
Terminals:	See Page 2.2

B. Part No: 12131361

Description:	Secondary Lock
Color:	Yellow
Material:	PA66 25% GF

C. Part No: 12131285

Description:	Connector 4M (Clip Slot)
Size:	33.0L x 14.4H x 16.4W
Color:	Black
Material:	PA66
Terminals:	See Page 2.3

D. Part No: 12131372

Description:	Secondary Lock
Color:	Yellow
Material:	PA66 25% GF
Note:	M Clip-on Connector also available

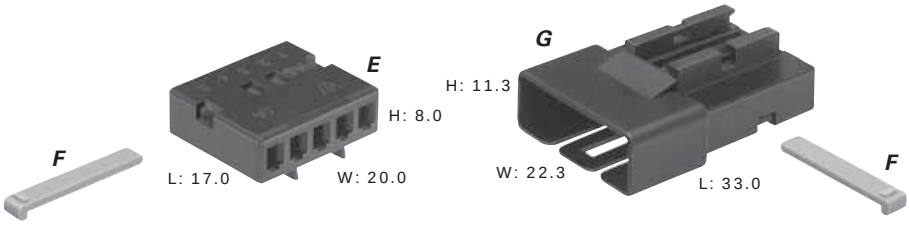

Total Mated Length: 38.3mm

E. Part No: 12147054

Description:	Connector 5F
Size:	17.0L x 8.0H x 20.0W
Color:	Black
Material:	PA6
Terminals:	See Page 2.2

F. Part No: 12147055

Description:	Secondary Lock
Number Req:	2
Color:	Yellow
Material:	PA66 25% GF

G. Part No: 12185636

Description:	Connector 5M (Clip Slot)
Size:	33.0L x 11.3H x 22.3W
Color:	Black
Material:	PA66
Terminals:	See Page 2.3
Note:	Clip Version available

NOTE: Specifications in this catalog are for general reference only and are subject to change without notice. To verify product information, please contact a Delphi representative.

Peters de Laet
503-661-5088 – phone 503-661-5328 – fax
www.pdel.com

150

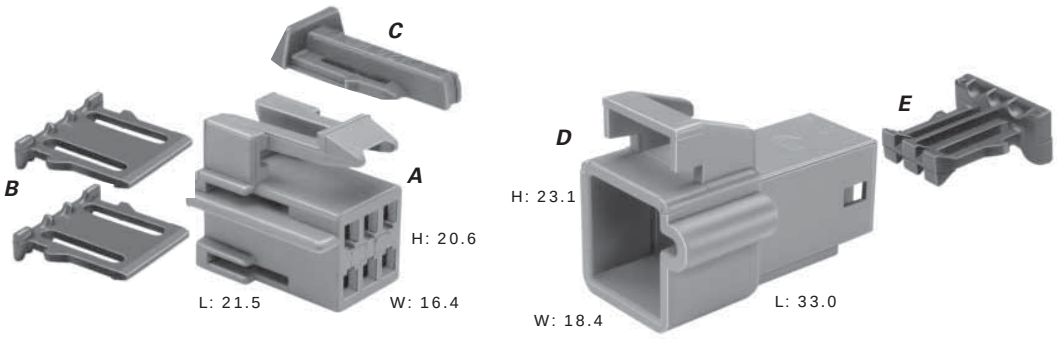

Total Mated Length: 50.1mm

A. Part No: 12064762

Description:	Connector 6F
Size:	21.5L x 20.6H x 16.4W
Color:	Lt. Gray
Material:	PA66 HS IM
Terminals:	See Page 2.2

B. Part No: 12064764

Description:	TPA
Number Req:	2
Color:	Blue
Material:	PBT

C. Part No: 12052834

Description:	CPA
Color:	Green
Material:	PP

D. Part No: 12064763

Description:	Connector 6M (Clip Slot)
Size:	33.0L x 23.1H x 18.4W
Color:	Gray
Material:	PBT
Terminals:	See Page 2.3

E. Part No: 12064765

Description:	TPA
Color:	Black
Material:	PBT

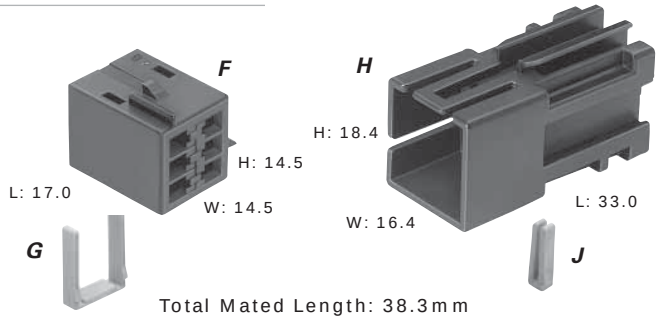

Total Mated Length: 38.3mm

F. Part No: 15396848

Description:	Connector 6F
Size:	17.0L x 14.5H x 14.5W
Color:	Black
Material:	PA6
Terminals:	See Page 2.2

G. Part No: 12131358

Description:	Secondary Lock
Color:	Yellow
Material:	PA66 25% GF

H. Part No: 15396849

Description:	Connector 6M
Size:	33.0L x 18.4H x 16.4W
Color:	Black
Material:	PA66
Terminals:	See Page 2.3

J. Part No: 12131370

Description:	Secondary Lock
Color:	Yellow
Material:	PA66 25% GF

NOTE: Specifications in this catalog are for general reference only and are subject to change without notice. To verify product information, please contact a Delphi representative.

150

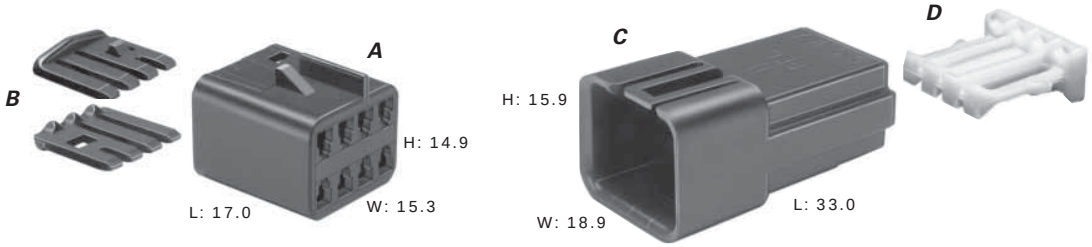

Total Mated Length: 41.2mm

A. Part No: 12047886

Description:	Connector 8F
Size:	17.0L x 14.9H x 15.3W
Color:	Black
Material:	PA66 HS IM
Terminals:	See Page 2.2

B. Part No: 12045689

Description:	TPA
Number Req:	2
Color:	Md. Gray
Material:	PA66 HS IM

C. Part No: 12045688

Description:	Connector 8M (Clip Slot)
Size:	33.0L x 15.9H x 18.9W
Color:	Black
Material:	PA66 HS IM
Terminals:	See Page 2.3

D. Part No: 12045690

Description:	TPA
Color:	Natural
Material:	PBT

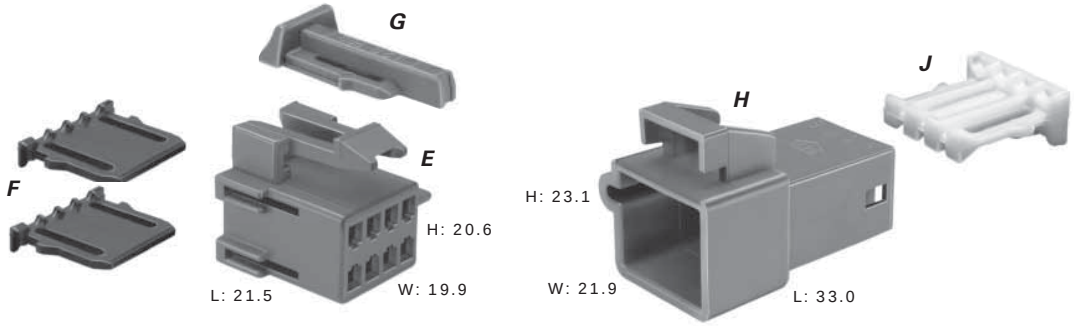

Total Mated Length: 48.3mm

E. Part No: 12064766

Description:	Connector 8F
Size:	21.5L x 20.6H x 19.9W
Color:	Blue
Material:	PBT
Terminals:	See Page 2.2

F. Part No: 12064768

Description:	TPA
Number Req:	2
Color:	Black
Material:	PBT

G. Part No: 12052834

Description:	CPA
Color:	Green
Material:	PP

H. Part No: 12064767

Description:	Connector 8M (Clip Slot)
Size:	33.0L x 23.1H x 21.9W
Color:	Blue
Material:	PBT
Terminals:	See Page 2.3

J. Part No: 12045690

Description:	TPA
Color:	Natural
Material:	PBT

NOTE: Specifications in this catalog are for general reference only and are subject to change without notice. To verify product information, please contact a Delphi representative.

Peters de Laet
503-661-5088 – phone 503-661-5328 – fax
www.pdel.com

150

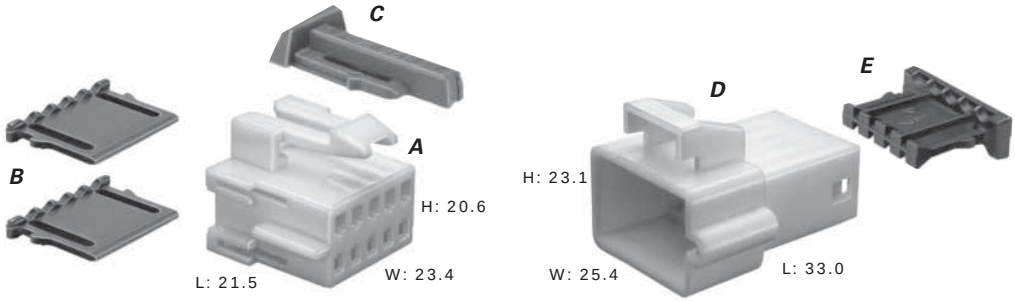

Total Mated Length: 48.3mm

A. Part No: 12064769

Description:	Connector 10F
Size:	21.5L x 20.6H x 23.4W
Color:	Cream
Material:	PA66 HS IM
Terminals:	See Page 2.2

B. Part No: 12064771

Description:	TPA
Number Req:	2
Color:	Md. Gray
Material:	PA66 HS IM

C. Part No: 12052834

Description:	CPA
Color:	Green
Material:	PP

D. Part No: 12064770

Description:	Connector 10M (Clip Slot)
Size:	33.0L x 23.1H x 25.4W
Color:	Cream
Material:	PA66 HS IM
Terminals:	See Page 2.3

E. Part No: 12064772

Description:	TPA
Color:	Black
Material:	PBT

NOTE: Specifications in this catalog are for general reference only and are subject to change without notice. To verify product information, please contact a Delphi representative.

Peters de Laet
503-661-5088 – phone 503-661-5328 – fax
www.pdel.com

150

Cross Sectional View

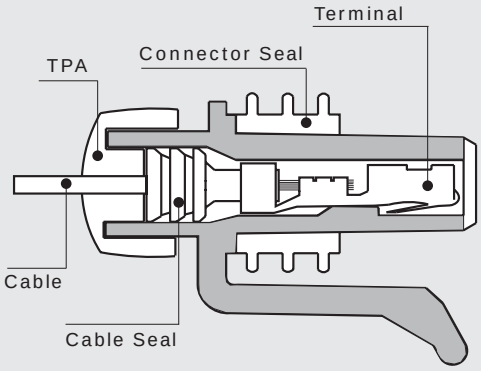

Female Connector Assembly

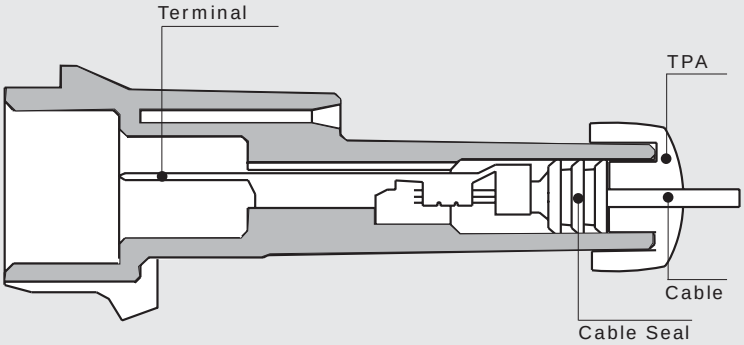

Male Connector

150 Female Terminals Sealed			
Part #	**Cable Range (mm²)**	**Material**	**Plating**
12048074	1.0-0.80-0.50	Silicon Bronze	Tin
12084200	0.50-0.35	Silicon Bronze	Tin
12160223	1.0-0.80	Beryllium Copper	Silver/Nickel
12160222	0.50-0.35	Beryllium Copper	Silver/Nickel

150.2 Pull-to-Seat Female Terminals*			
Part #	**Cable Range (mm²)**	**Material**	**Plating**
12124075	1.0-0.80	Silicon Bronze	Tin
12124076	0.50-0.35	Silicon Bronze	Tin
12161184	1.0-0.80	Beryllium Copper	Tin

*To be used with female connections, see page 2.22

150 Metri-Pack Cable Seals				
Reel Part #	**Loose Part #**	**Cable Dia.**	**Material**	**Color**
12052924	15324973	2.85-2.03	Silicone	Dk. Red
12089442	15324976	2.15-1.60	Silicone	White
12052925	15324974	1.70-1.29	Silicone	Blue
12124669	15324975	1.009-0.995	Silicone	Tan

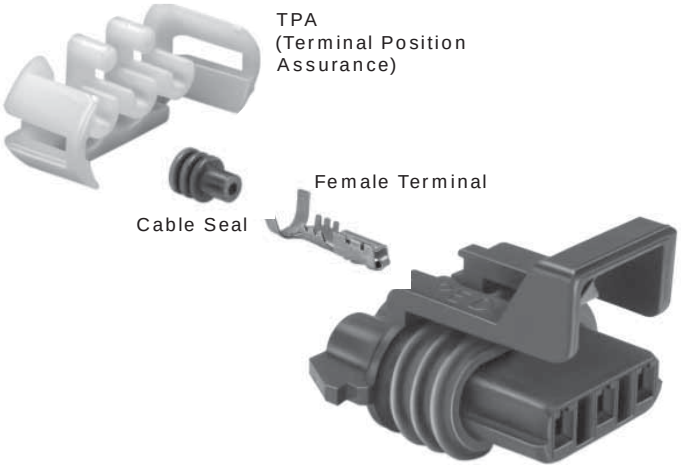

Female Connector Assembly

150 Female Connector Assemblies Sealed				
# Cavities	**Conn. Asm.**	**Color**	**Material**	**TPA**
2	12052641	Black	PA66 HS IM	12052634
3	12110293	Black	PA66 HS IM	12052845
4	12162144	Black	PA66 HS IM	12047948
5	12146045	Cream	PA66 HS IM	12092844
6	12052848	Black	PA66 HS IM	12052850
8	12047937	Black	PA66 HS IM	12066304
10	12065425	Black	PA66 HS IM	12177082

NOTE: Specifications in this catalog are for general reference only and are subject to change without notice. To verify product information, please contact a Delphi representative.

Peters de Laet
503-661-5088 – phone 503-661-5328 – fax
www.pdel.com

150

Sealed System Application Information

CABLE RANGE (mm²): 0.35-1.0

CURRENT RANGE (AMPS): 0-14

TEMP RANGE °C: ..... -40 to 125

RESISTANCE: ..... <10mΩ@20mV

VOLTAGE DROP: .... <10.0 mV/amp

CENTERLINE SPACING (mm): 6.0

BLADE WIDTH (mm): 1.5

150 Series Terminals – Tin Plated

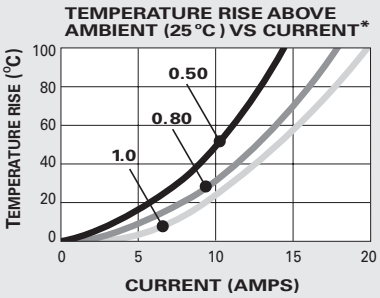

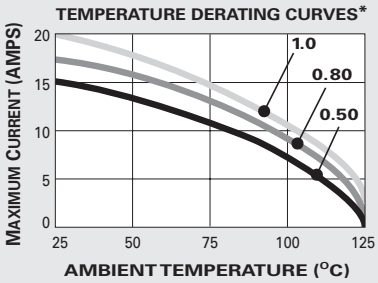

*The test data are based on single circuits in free space and were generated using a "Lumped Resistance" model. This model does not account for all of the variables that would be present in an actual application. For actual product performance, contact your regional support representative.

CPA
(Connector Position Assurance)

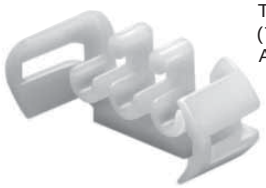

TPA
(Terminal Position Assurance)

Male Terminal

Cable Seal

Male Connector

150 Male Terminals Sealed

Part #	Cable Range (mm²)	Material	Plating
12045773	0.80-0.50	Tin Brass	Tin
12077628	0.50-0.35	Tin Brass	Tin

150 Male Connectors Sealed

# Cavities	Connector	Color	Material	TPA
2	12162000	Black	PA66 HS IM	12052634
3	12129615	Black	PA66 HS IM	12052845
4	12162102	Black	PBT 30% GF	12047948
5	12103974	Natural	PBT 30% GF	12092844
6	12124107	Black	PA66 HS IM	12052850
8	12047931	Black	PBT 30% GF	15324525
10	12045808	Black	PBT 30% GF	12177082

150 Metri-Pack Cavity Plug*

Part #	Cavity Inside Diameter	Material	Color
12059168	5.2mm	Silicone	Dk. Red

*Cavity plugs seal unused female and male cavities

SECTION NOTES:

- Due to rigid tolerances of connector cavities, it is critical to meet all crimp dimensions as specified.
- Different color and connector indexing features are also available.
- Female connections for device applications, see page 2.21.

NOTE: Specifications in this catalog are for general reference only and are subject to change without notice. To verify product information, please contact a Delphi representative.

Peters de Laet
503-661-5088 – phone 503-661-5328 – fax
www.pdel.com

150

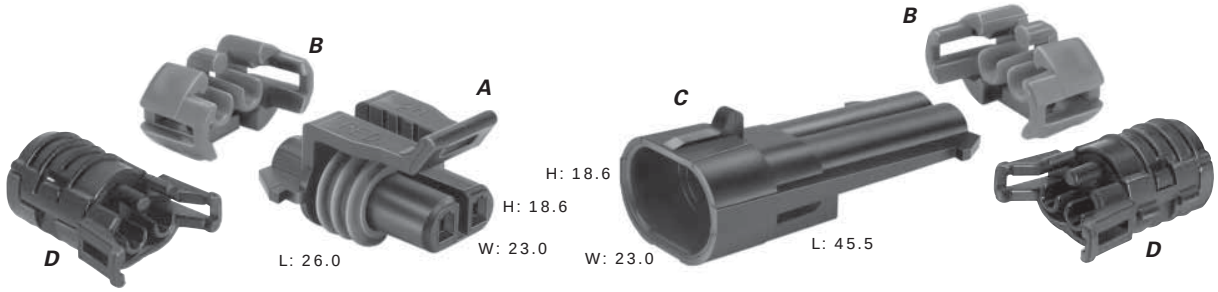

Total Mated Length: 58.5mm

A. Part No: 12052641 (Black)
12052644 (Lt. Gray)

Description:	Connector Assembly 2F
Size:	26.0L x 18.6H x 23.0W
Material:	PA66 HS IM
Terminals:	See Page 2.12
Seals/Plugs:	See Page 2.12, 2.13

B. Part No: 12052634

Description:	TPA
Number Req:	2
Color:	Blue
Material:	PA66 HS IM

C. Part No: 12162000 (Black)
12162343 (Lt. Gray)

Description:	Connector 2M (Clip Slot–Self Locking)
Size:	45.5L x 18.6H x 23.0W
Material:	PA66 HS IM
Terminals:	See Page 2.13
Seals/Plugs:	See Page 2.12, 2.13

D. Part No: 15327799 (Optional)

Description:	Conduit TPA
Number Req:	2
Color:	Black
Material:	PA6

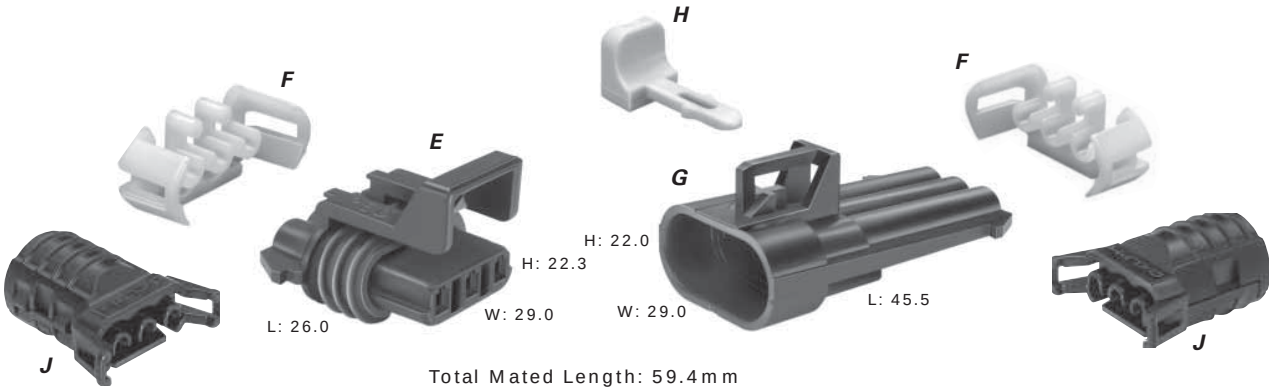

Total Mated Length: 59.4mm

E. Part No: 12110293

Description:	Connector Assembly 3F
Size:	26.0L x 22.3H x 29.0W
Color:	Black
Material:	PA66 HS IM
Terminals:	See Page 2.12
Seals/Plugs:	See Page 2.12, 2.13

F. Part No: 12052845

Description:	TPA
Number Req:	2
Color:	Natural
Material:	PA66 HS IM

G. Part No: 12129615

Description:	Connector 3M (Clip Slot–Self Locking)
Size:	45.5L x 22.0H x 29.0W
Color:	Black
Material:	PA66 HS IM
Terminals:	See Page 2.13
Seals/Plugs:	See Page 2.12, 2.13

H. Part No: 12020833

Description:	CPA
Color:	Gray
Material:	PBT

J. Part No: 10740397 (Optional)

Description:	Conduit TPA
Number Req:	2
Color:	Black
Material:	PA6

NOTE: Specifications in this catalog are for general reference only and are subject to change without notice. To verify product information, please contact a Delphi representative.

Peters de Laet
503-661-5088 – phone 503-661-5328 – fax
www.pdel.com

150

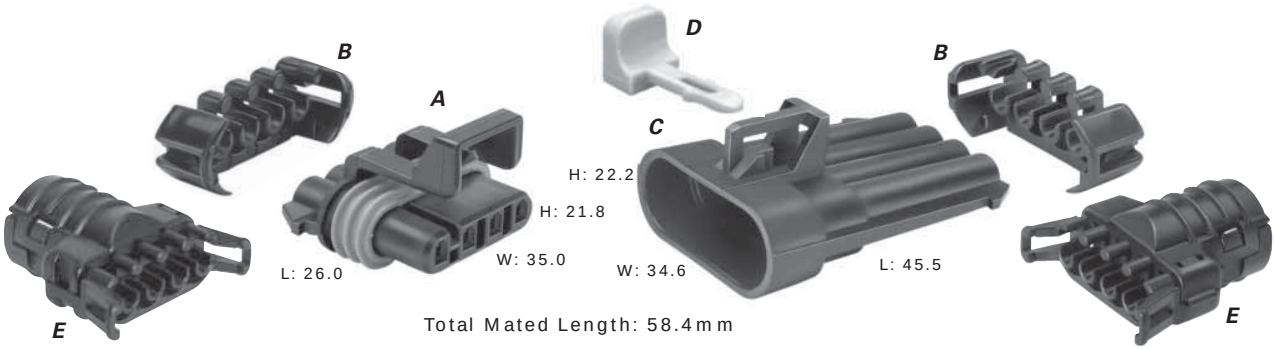

Total Mated Length: 58.4mm

A. Part No: 12162144

Description:	Connector Assembly 4F
Size:	26.0L x 21.8H x 35.0W
Color:	Black
Material:	PA66 HS IM
Terminals:	See Page 2.12
Seals/Plugs:	See Page 2.12, 2.13

B. Part No: 12047948

Description:	TPA
Number Req:	2
Color:	Black
Material:	PA66 HS IM

C. Part No: 12162102

Description:	Connector 4M (Clip Slot–Self Locking)
Size:	45.5L x 22.2H x 34.6W
Color:	Black
Material:	PBT 30% GF
Terminals:	See Page 2.13
Seals/Plugs:	See Page 2.12, 2.13

D. Part No: 12020833

Description:	CPA
Color:	Gray
Material:	PBT

E. Part No: 10719337 (Optional)

Description:	Conduit TPA
Number Req:	2
Color:	Black
Material:	PA6

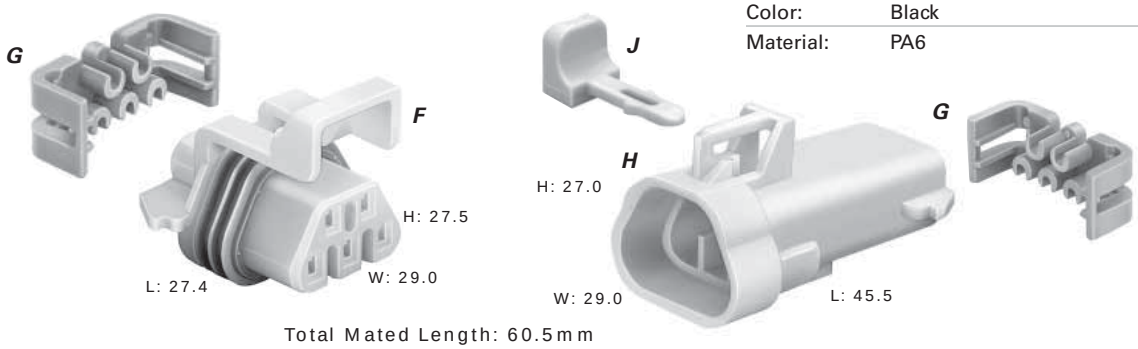

Total Mated Length: 60.5mm

F. Part No: 12146045

Description:	Connector Assembly 5F
Size:	27.4L x 27.5H x 29.0W
Color:	Cream
Material:	PA66 HS IM
Terminals:	See Page 2.12
Seals/Plugs:	See Page 2.12, 2.13

G. Part No: 12092844

Description:	TPA
Number Req:	2
Color:	Blue
Material:	PA66 HS IM

H. Part No: 12103974

Description:	Connector 5M
Size:	45.5L x 27.0H x 29.0W
Color:	Natural
Material:	PBT 30% GF
Terminals:	See Page 2.13
Seals/Plugs:	See Page 2.12, 2.13

J. Part No: 12020833

Description:	CPA
Color:	Gray
Material:	PBT

NOTE: Specifications in this catalog are for general reference only and are subject to change without notice. To verify product information, please contact a Delphi representative.

Peters de Laet
503-661-5088 – phone 503-661-5328 – fax
www.pdel.com

150

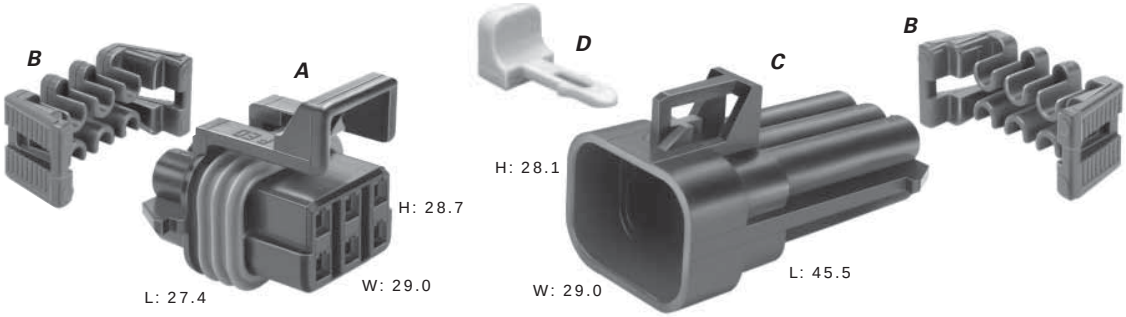

Total Mated Length: 60.5mm

A. Part No: 12052848

Description:	Connector Assembly 6F
Size:	27.4L x 28.7H x 29.0W
Color:	Black
Material:	PA66 HS IM
Terminals:	See Page 2.12
Seals/Plugs:	See Page 2.12, 2.13

B. Part No: 12052850

Description:	TPA
Number Req:	2
Color:	Md. Gray
Material:	PA66 HS IM

C. Part No: 12124107

Description:	Connector 6M (Clip Slot–Self Locking)
Size:	45.5L x 28.1H x 29.0W
Color:	Black
Material:	PA66 HS IM
Terminals:	See Page 2.13
Seals/Plugs:	See Page 2.12, 2.13

D. Part No: 12020833

Description:	CPA
Color:	Gray
Material:	PBT

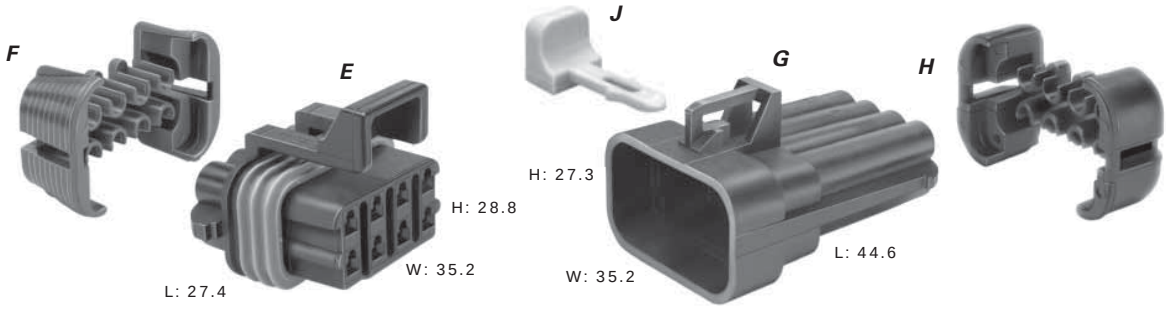

Total Mated Length: 60.4mm

E. Part No: 12047937 (Black)

Description:	Connector Assembly 8F

Part No: 12047938 (Lt. Gray)

Description:	Connector Assembly 7F

Part No: 12052600 (Md. Gray)

Description:	Connector Assembly 5F
Size:	27.4L x 28.8H x 35.2W
Material:	PA66 HS IM
Terminals:	See Page 2.12
Seals/Plugs:	See Page 2.12, 2.13

F. Part No: 12066304

Description:	TPA
Color:	Md. Gray
Material:	PA66 HS IM

G. Part No: 12047931 (Black)

Description:	Connector 8M (Clip Slot)

Part No: 12047933 (Gray)

Description:	Connector 7M (Clip Slot)

Part No: 12052480 (Dk. Gray)

Description:	Connector 5M (Clip Slot)
Size:	44.6L x 27.3H x 35.2W
Material:	PBT 30% GF
Terminals:	See Page 2.13
Seals/Plugs:	See Page 2.12, 2.13

H. Part No: 15324525

Description:	TPA
Color:	Black
Material:	PA66 HS IM

J. Part No: 12020833

Description:	CPA
Color:	Gray
Material:	PBT

NOTE: Specifications in this catalog are for general reference only and are subject to change without notice. To verify product information, please contact a Delphi representative.

Peters de Laet
503-661-5088 – phone 503-661-5328 – fax
www.pdel.com

150

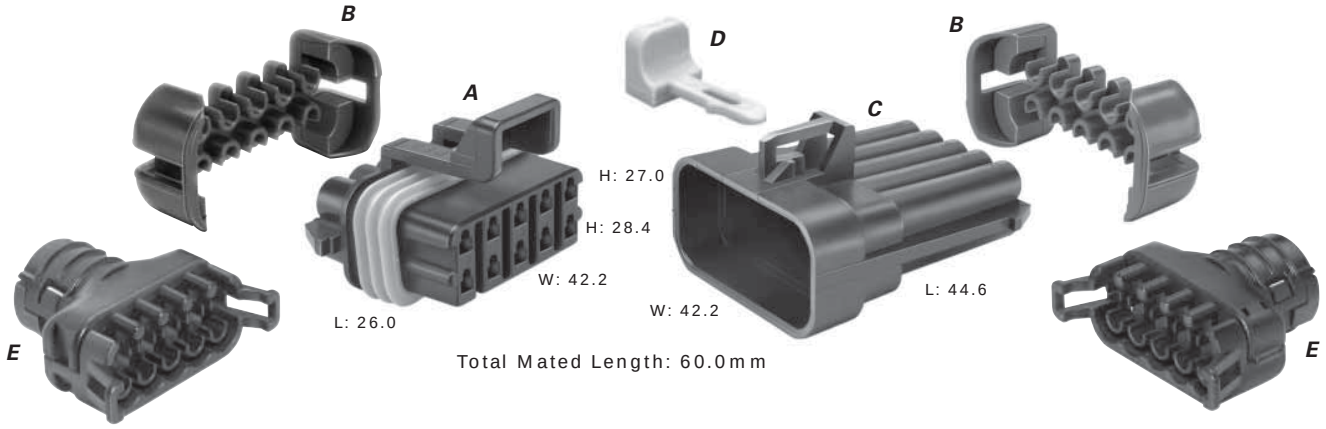

A. Part No: 12065425 (Black)
12065426 (Md. Gray)

Description:	Connector Assembly 10F
Size:	26.0L x 28.4H x 42.2W
Material:	PA66 HS IM
Terminals:	See Page 2.12
Seals/Plugs:	See Page 2.12, 2.13

B. Part No: 12177082

Description:	TPA
Number Req:	2
Color:	Md. Gray
Material:	PA66 HS IM

C. Part No: 12045808 (Black)
12052189 (Gray)

Description:	Connector 10M (Clip Slot)
Size:	44.6L x 27.0H x 42.2W
Material:	PBT 30% GF
Terminals:	See Page 2.13
Seals/Plugs:	See Page 2.12, 2.13

D. Part No: 12020833

Description:	CPA
Color:	Gray
Material:	PBT

E. Part No: 10719339 (Optional)

Description:	Conduit TPA
Number Req:	2
Color:	Black
Material:	PA6

NOTE: Specifications in this catalog are for general reference only and are subject to change without notice. To verify product information, please contact a Delphi representative.

Peters de Laet
503-661-5088 – phone 503-661-5328 – fax
www.pdel.com

150 Device Connections

Metri-Pack OBD II — On-Board Diagnostic Connection System

The On-Board Diagnostic Connection System is designed to meet SAE J1962 specifications using ISO standard male terminals. The 16 Terminal Male Test Equipment Connector includes a nylon insulator with ISO standard copper alloy male terminals. The Female Vehicle Connector is designed for under dash application, and accepts 150 Series Metri-Pack tangless female terminals available in silicon bronze.

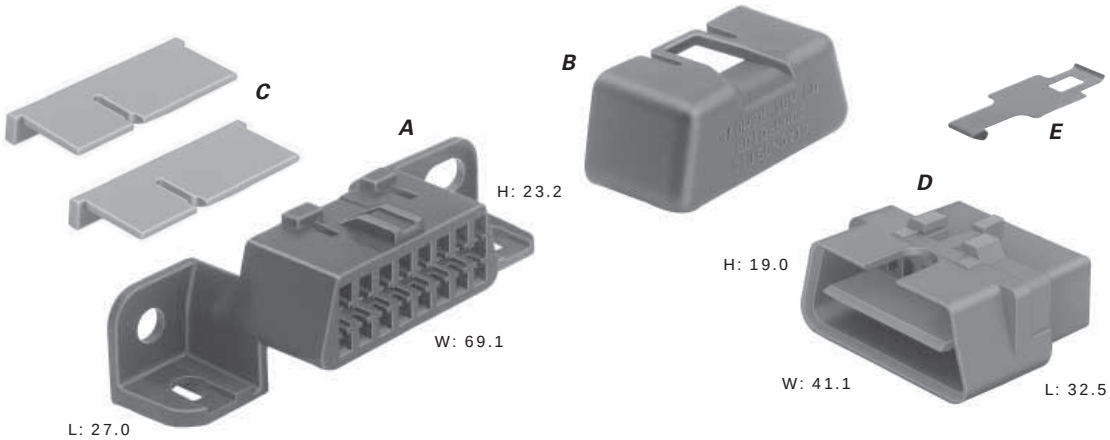

A. Part No: 12110250

Description:	Connector 16F (Fastener Mounting)
Size:	27.0L x 23.2H x 69.1W

Part No: 15317575

Description:	Connector 16F (Snap Mounting)
Size:	17.0L x 23.2H x 52.0W
Color:	Black
Material:	PA66 HS IM
Terminals:	See Page 2.2

B. Part No: 12146933

Description:	Cover
Color:	Black
Material:	PP IM

C. Part No: 12160437

Description:	TPA
Number Req:	2
Color:	Blue
Material:	PA66 HS IM

F. Part No: 12185280

Description:	Connector 16F
Size:	28.0L x 23.0H x 61.0W
Color:	White
Material:	PA66
Terminals:	See Page 2.2

G. Part No: 12185279

Description:	Cover
Color:	Black
Material:	PA66

D. Part No: 12110252

Description:	Connector 16M
Size:	32.5L x 19.0H x 41.1W
Color:	Red
Material:	PBT 30% GF
Terminals:	See Page 2.3
Note:	For molding details refer to drawing 12110256

E. Part No: 12110254

Description:	Clip
Material:	Stainless Steel

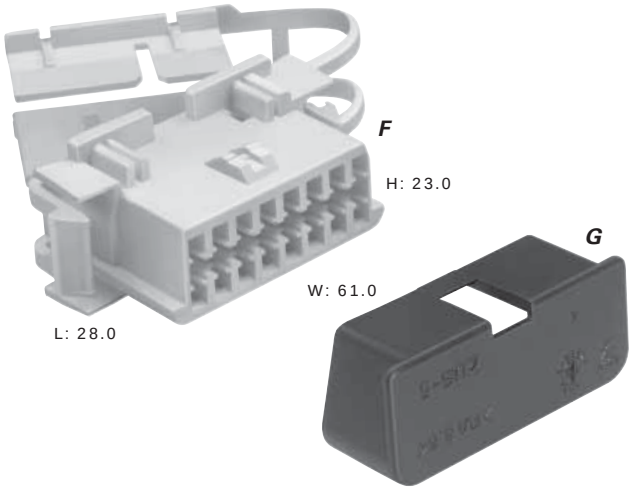

NOTE: Specifications in this catalog are for general reference only and are subject to change without notice. To verify product information, please contact a Delphi representative.

Peters de Laet
503-661-5088 – phone 503-661-5328 – fax
www.pdel.com

150 Device Connections

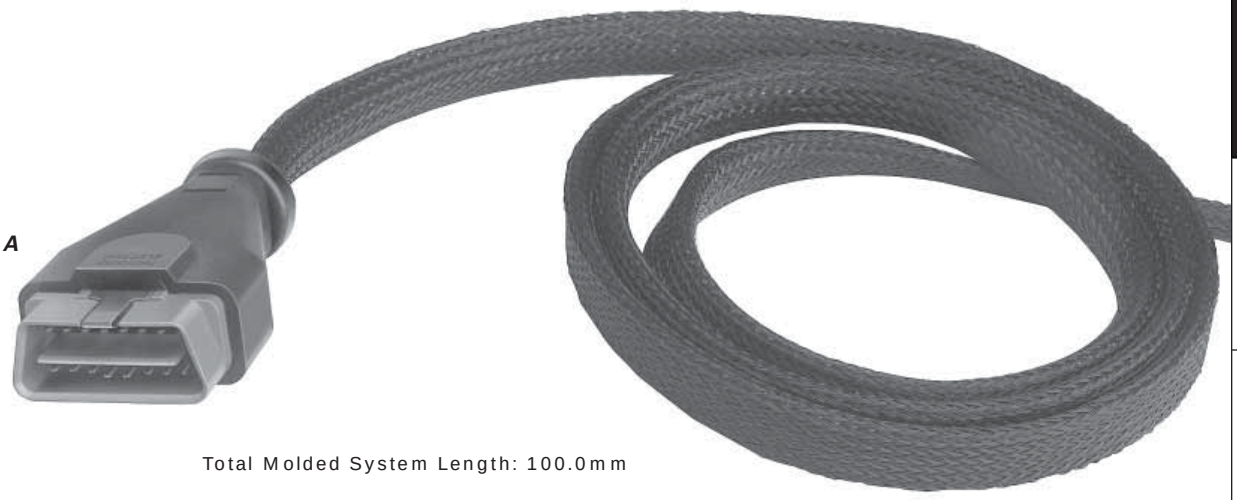

Total Molded System Length: 100.0mm

A.

Description:	Connector Assembly 16M OBD II
Part No:	**12143692**
Length:	3 Feet (915mm)
Part No:	**12143693**
Length:	8 Feet (2440mm)
Part No:	**12143694**
Length:	12 Feet (3660mm)

NOTE: Specifications in this catalog are for general reference only and are subject to change without notice. To verify product information, please contact a Delphi representative.

Peters de Laet
503-661-5088 – phone 503-661-5328 – fax
www.pdel.com

150 Device Connections

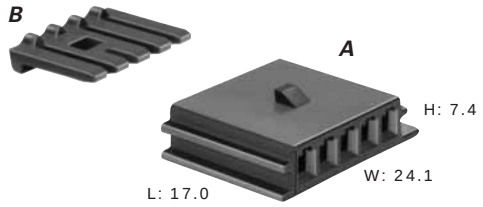

A. Part No: 12059800

Description:	Connector 5F
Size:	17.0L x 7.4H x 24.1W
Color:	Black
Material:	PA66 HS IM
Terminals:	See Page 2.2
Typical App:	Motor

B. Part No: 12059801

Description:	TPA
Color:	Md. Gray
Material:	PA66 HS IM

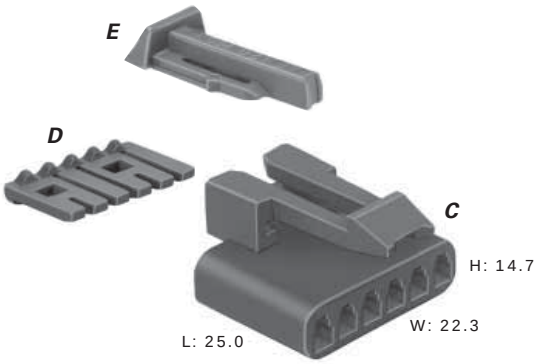

C. Part No: 12064860

Description:	Connector 6F
Size:	25.0L x 14.7H x 22.3W
Color:	Black
Material:	PBT
Terminals:	See Page 2.2
Typical App:	Switch

D. Part No: 12064861

Description:	TPA
Color:	Md. Gray
Material:	PA66 HS IM

E. Part No: 12052834

Description:	CPA
Color:	Green
Material:	PP

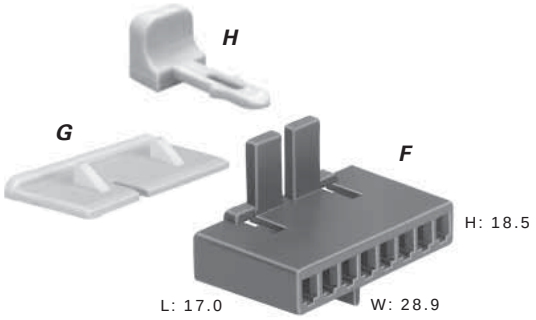

F. Part No: 12064862

Description:	Connector 8F
Size:	17.0L x 18.5H x 28.9W
Color:	Black
Material:	PA66 HS IM
Terminals:	See Page 2.2
Typical App:	Mirror Switch

G. Part No: 12064863

Description:	TPA
Color:	Lt. Gray
Material:	PA66 HS IM

H. Part No: 12020833

Description:	CPA
Color:	Gray
Material:	PBT

NOTE: Specifications in this catalog are for general reference only and are subject to change without notice. To verify product information, please contact a Delphi representative.

Peters de Laet
503-661-5088 – phone 503-661-5328 – fax
www.pdel.com

150 Device Connections

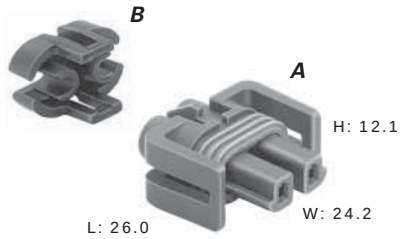

A. Part No: 12162017

Description:	Connector Assembly 2F
Size:	26.0L x 12.1H x 24.2W
Color:	Md. Gray
Material:	PA66 HS IM
Terminals:	See Page 2.12
Seals/Plugs:	See Page 2.12, 2.13
Typical App:	Compressor

B. Part No: 12124824

Description:	TPA
Color:	Black
Material:	PA66 HS IM

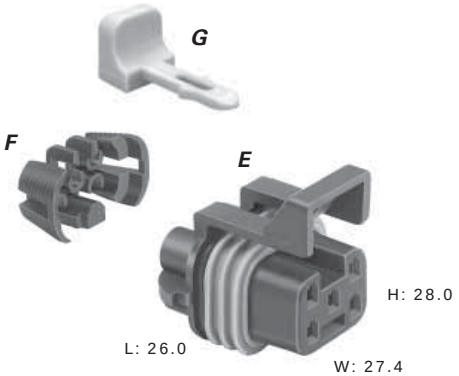

E. Part No: 12077591

Description:	Connector Assembly 5F
Size:	26.0L x 28.0H x 27.4W
Color:	Black
Material:	PA66 HS IM
Terminals:	See Page 2.12
Seals/Plugs:	See Page 2.12, 2.13
Typical App:	EGR Valve

F. Part No: 12052898

Description:	TPA
Color:	Black
Material:	PA66 HS IM

G: Part No: 12020833

Description:	CPA
Color:	Gray
Material:	PBT

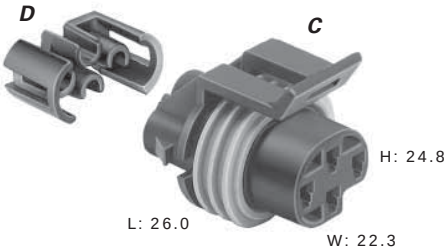

C. Part No: 12065298

Description:	Connector Assembly 4F
Size:	26.0L x 24.8H x 22.3W
Color:	Black
Material:	PA66 HS IM
Terminals:	See Page 2.12
Seals/Plugs:	See Page 2.12, 2.13
Typical App:	Switch

D. Part No: 12066176

Description:	TPA
Color:	Black
Material:	PA66 HS IM

NOTE: Specifications in this catalog are for general reference only and are subject to change without notice. To verify product information, please contact a Delphi representative.

Peters de Laet
503-661-5088 – phone 503-661-5328 – fax
www.pdel.com

150.2 Pull-to-Seat

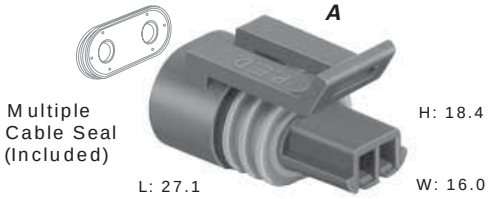

A. Part No: 12162193 (Black/Green Seal)

2.66 -2.00 Cable O.D.

Part No: 12162197 (Md. Gray/Green Seal)

2.66 -2.00 Cable O.D.

Part No: 12162198 (Md. Gray/Tan Seal)

2.15 -1.65 Cable O.D.

Part No: 12162199 (Md. Gray/Orange Seal)

1.85 -1.47 Cable O.D.

Description:	Connector Assembly 2F
Size:	27.1L x 18.4H x 16.0W
Material:	PA66 HS IM
Terminals:	See Page 2.12
Typical App:	Temperature Sensors

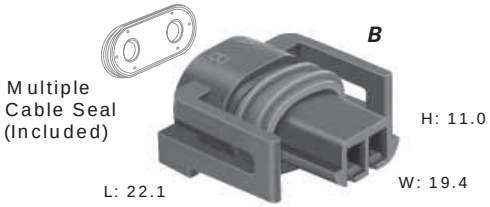

B. Part No: 12162215 (Black/Brown Seal)

2.66 -2.00 Cable O.D.

Part No: 12162216 (Black/Lt. Gray Seal)

2.66 -2.00 Cable O.D.

Part No: 12162217 (Black/Gray Seal)

2.15 -1.65 Cable O.D.

Part No: 12162218 (Black/Yellow Seal)

2.15 -1.65 Cable O.D.

Description:	Connector Assembly 2F
Size:	22.1L x 11.0H x 19.4W
Material:	PA66 HS IM
Terminals:	See Page 2.12
Typical App:	Throttle Body Injector

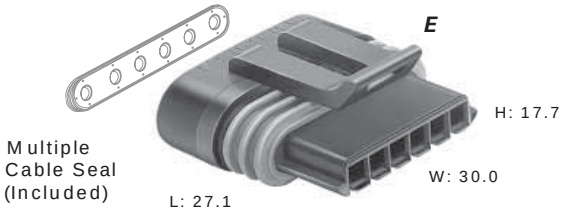

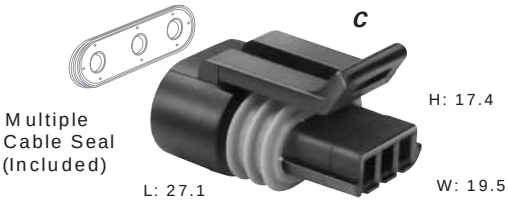

C. Part No: 12162182 (Black/Green Seal)

2.66 -2.00 Cable O.D.

Part No: 12162280 (Md. Gray/Green Seal)

2.66 -2.00 Cable O.D.

Description:	Connector Assembly 3F
Size:	27.1L x 17.4H x 19.5W
Material:	PA66 HS IM
Terminals:	See Page 2.12
Typical App:	Crankshaft Sensor

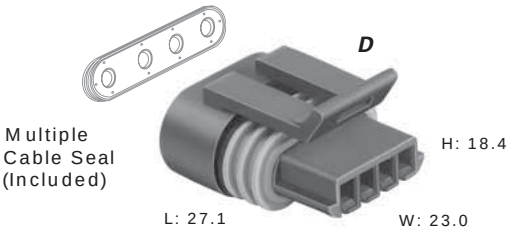

D. Part No: 12162188 (Black/Green Seal)

2.66 -2.00 Cable O.D.

Part No: 12162191 (Black/Blue Seal)

2.66 -2.00 Cable O.D.

Description:	Connector Assembly 4F
Size:	27.1L x 18.4H x 23.0W
Material:	PA66 HS IM
Terminals:	See Page 2.12
Typical App:	Distributor Module

E. Part No: 12162210 (Black/Green Seal)

2.66 -2.00 Cable O.D.

Part No: 12162260 (Black/Tan Seal)

2.15 -1.65 Cable O.D.

Part No: 12162261 (Black/Lt. Gray Seal)

1.85 -1.47 Cable O.D.

Description:	Connector Assembly 6F
Size:	27.1L x 17.7H x 30.0W
Material:	PA66 HS IM
Terminals:	See Page 2.12
Typical App:	Various

NOTE: GT series equivalents available for several Metri-Pack 150 Pull-to-Seat connector assemblies. Please refer to cross reference table on page 1.11 in the GT section.

NOTE: Specifications in this catalog are for general reference only and are subject to change without notice. To verify product information, please contact a Delphi representative.

Peters de Laet
503-661-5088 – phone 503-661-5328 – fax
www.pdel.com

280

Available in device and in-line connections for vehicle applications, Metri-Pack 280 Series connectors can meet or exceed the requirements for most marine, appliance, and industrial control applications.

Ideally suited for limited space applications that do not require environmental protection, Metri-Pack 280 Series products are extremely versatile.

Available in device and in-line connections for underhood vehicle applications, Metri-Pack 280 Series sealed connectors can meet or exceed the requirements for most marine, appliance, and industrial control applications.

Utilizing triple-rib peripheral silicone rubber seals, Metri-Pack 280 Series sealed systems are ideally suited for critical, low-energy electronic applications that require protection from environmental hazards.

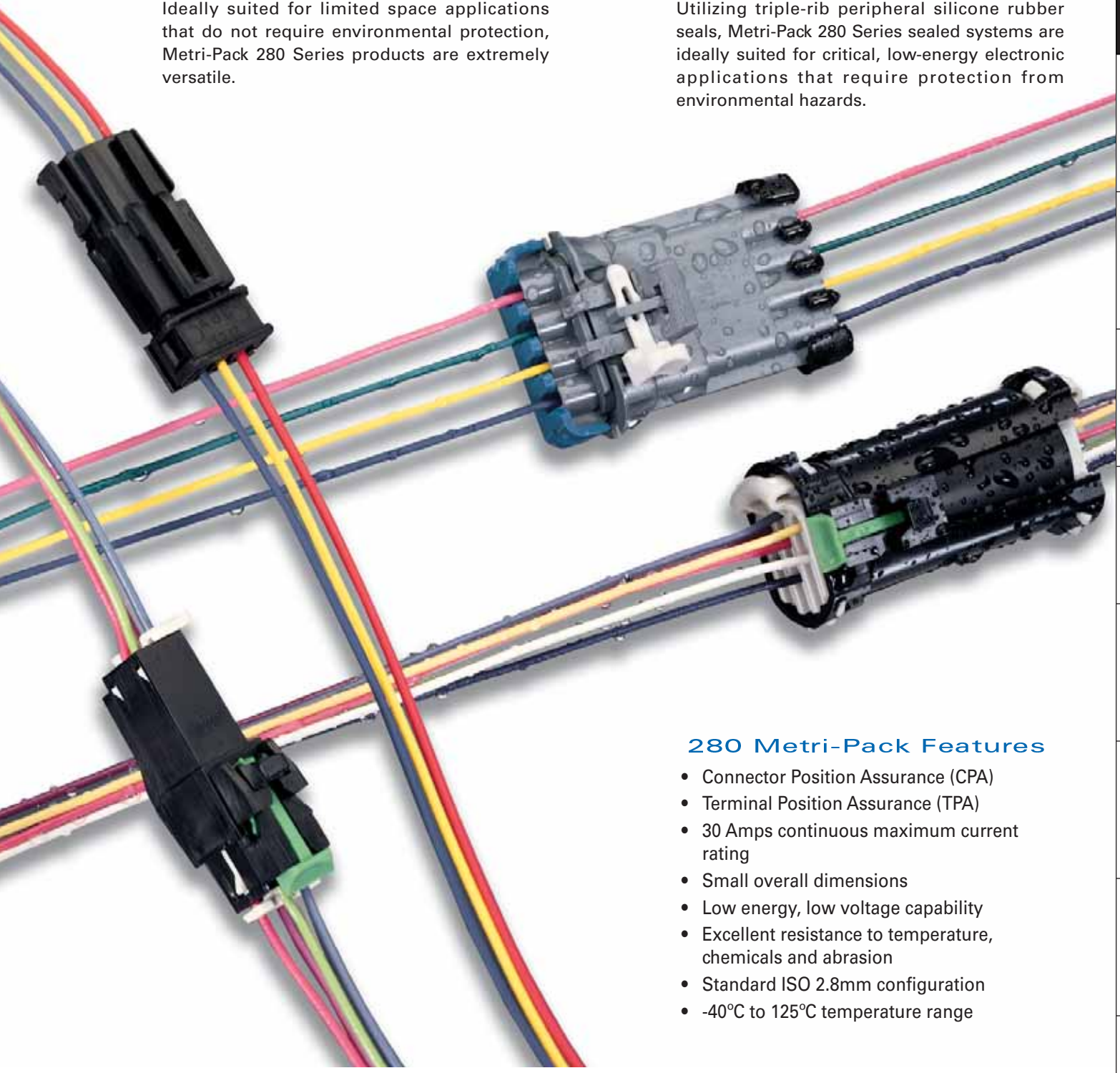

280 Metri-Pack Features

- Connector Position Assurance (CPA)
- Terminal Position Assurance (TPA)
- 30 Amps continuous maximum current rating
- Small overall dimensions
- Low energy, low voltage capability
- Excellent resistance to temperature, chemicals and abrasion
- Standard ISO 2.8mm configuration
- -40°C to 125°C temperature range

Peters de Laet
503-661-5088 – phone 503-661-5328 – fax
www.pdel.com

280

Cross Sectional View

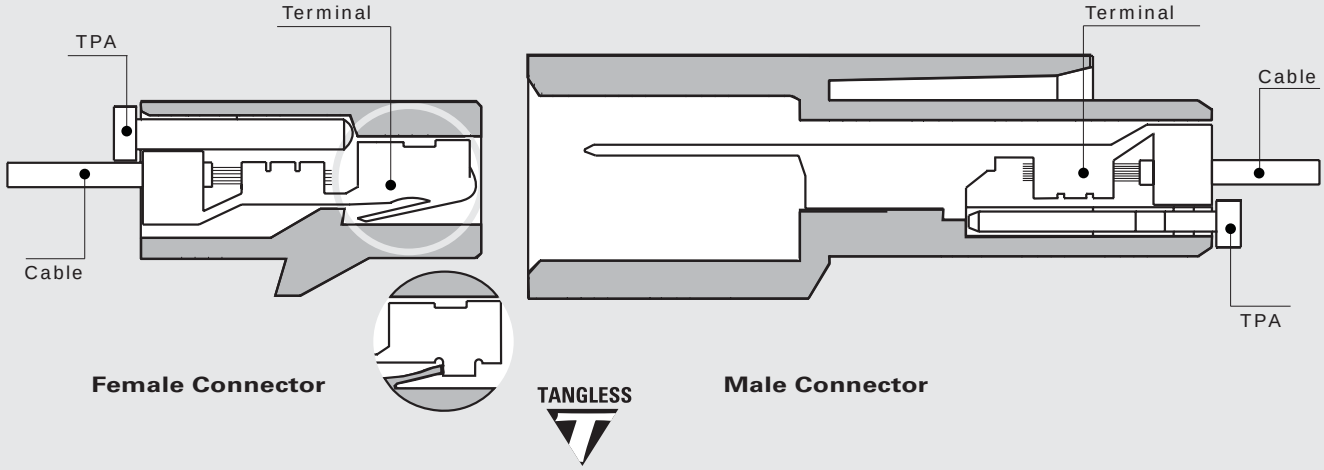

TANGLESS

280 Tangless Female Terminals Unsealed

Part #	Cable Range (mm²)	Material	Plating
12129425	5.0-3.0	Tin Brass	Tin
12129663	3.0	Tin Brass	Tin
12129424	2.0-1.0	Tin Brass	Tin
12110842*	3.0-2.0	Tin Brass	Tin
12110844*	1.0-0.80	Tin Brass	Tin
12110843*	0.50-0.35	Tin Brass	Tin
12129061*	2.0-0.35	Tin Brass	Tin

***Thin Stock**—Electrical current restrictions apply.

280 Female Terminals Unsealed

Part #	Cable Range (mm²)	Material	Plating
12015858	5.0-3.0	Tin Brass	Tin
12129494	3.0-2.0	Tin Brass	Tin
12066214	2.0-1.0	Tin Brass	Tin
12034046	0.80-0.50	Tin Brass	Tin
12052217	0.50-0.35	Tin Brass	Tin
12162597*	3.0-2.0	Tin Brass	Tin
12162595*	1.0-0.80	Tin Brass	Tin
12162596*	0.50-0.35	Tin Brass	Tin

***Thin Stock**—Electrical current restrictions apply.

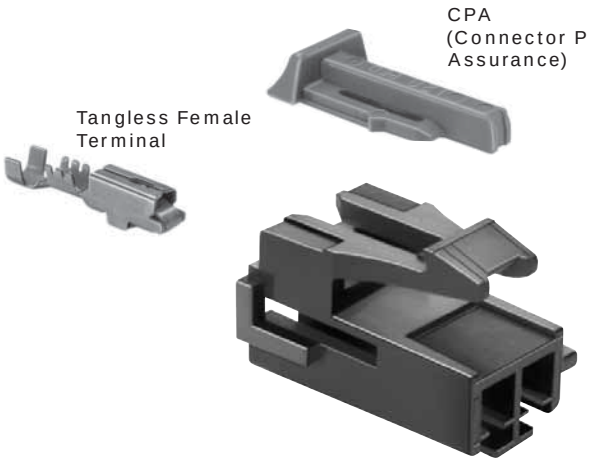

Female Connector

TANGLESS

280 Flexlock Female Connectors Unsealed

# Cavities	Connector	Color	Material	TPA
2	12129081	Black	PA66 HS IM	12129083
3	12129489	Black	PA66 HS IM	12129491
4	12129136	Black	PA66 HS IM	12129138

280 Female Connectors Unsealed

# Cavities	Connector	Color	Material	TPA
6	12064752	Black	PA66 HS IM	12064753
8	12064998	Black	PA66 HS IM	12064999

NOTE: Specifications in this catalog are for general reference only and are subject to change without notice. To verify product information, please contact a Delphi representative.

Peters de Laet
503-661-5088 – phone 503-661-5328 – fax
www.pdel.com

280

Unsealed System Application Information

280 Series Terminals – Tin Plated

CABLE RANGE (mm²): 0.35-5.0

CURRENT RANGE (AMPS): 0-30

TEMP RANGE °C: ..... -40 to 125

RESISTANCE: ..... <10mΩ@20mV

VOLTAGE DROP: ..... <3.0mV/amp

CENTERLINE SPACING (mm): 5.0

BLADE WIDTH (mm): 2.8

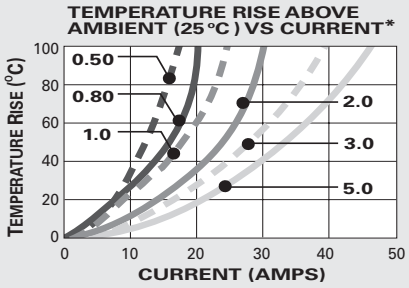

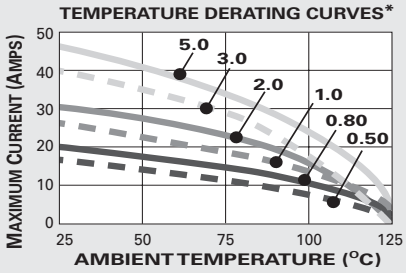

*The test data are based on single circuits in free space and were generated using a "Lumped Resistance" model. This model does not account for all of the variables that would be present in an actual application. For actual product performance, contact your regional support representative.

Male Connector

Male Terminal

TPA
(Terminal Position Assurance)

280 Male Terminals Unsealed

Part #	Cable Range (mm²)	Material	Plating
12084586	5.0-3.0	Tin Brass	Tin
12129498	3.0-2.0	Tin Brass	Tin
12020116	2.0-1.0	Tin Brass	Tin
12034047	0.80-0.50	Tin Brass	Tin
12066271	0.50-0.35	Tin Brass	Tin
12020782	0.35 (2 Req'd.)	Tin Brass	Tin

280 Male Connectors Unsealed

# Cavities	Connector	Color	Material	TPA
2	12129155	Black	PA66 HS IM	12129157
3	12129490	Black	PA66 HS IM	12129492
4	12129135	Black	PA66 HS IM	12129137
6	12064754	Black	PA6	12064755
8	12066195	Black	PA66 HS IM	12065141

SECTION NOTES:

- Due to rigid tolerances of connector cavities, it is critical to meet all crimp dimensions as specified.
- Different color and connector indexing features are also available.
- Female connections for device applications, see page 2.37.

NOTE: Specifications in this catalog are for general reference only and are subject to change without notice. To verify product information, please contact a Delphi representative.

Peters de Laet
503-661-5088 – phone 503-661-5328 – fax
www.pdel.com

280

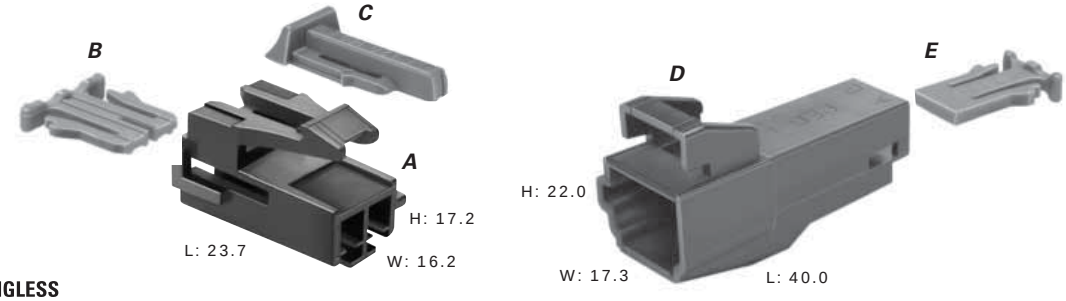

TANGLESS

Total Mated Length: 54.3mm

A. Part No: 12129081 (Black)
12129082 (Md. Gray)

Description:	Connector 2F
Size:	23.7L x 17.2H x 16.2W
Material:	PA66 HS IM
Terminals:	See Page 2.24

B. Part No: 12129083

Description:	TPA
Color:	Lt. Gray
Material:	PA66 HS IM

C. Part No: 12052834

Description:	CPA
Color:	Green
Material:	PP

D. Part No: 12129155 (Black)
12129156 (Md. Gray)

Description:	Connector 2M (Clip Slot–Self Locking)
Size:	40.0L x 22.0H x 17.3W
Material:	PA66 HS IM
Terminals:	See Page 2.25

E. Part No: 12129157

Description:	TPA
Color:	Lt. Gray
Material:	PA66 HS IM

NOTE: Specifications in this catalog are for general reference only and are subject to change without notice. To verify product information, please contact a Delphi representative.

Peters de Laet
503-661-5088 – phone 503-661-5328 – fax
www.pdel.com

280

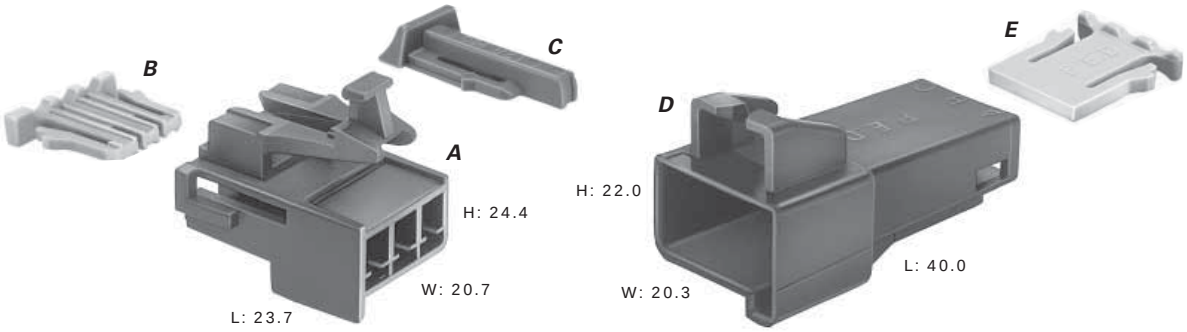

Total Mated Length: 54.3mm

TANGLESS

A. Part No: 12129489

Description:	Connector 3F
Size:	23.7L x 24.4H x 20.7W
Color:	Black
Material:	PA66 HS IM
Terminals:	See Page 2.24

B. Part No: 12129491

Description:	TPA
Color:	Lt. Gray
Material:	PA66 HS IM

C. Part No: 12052834

Description:	CPA
Color:	Green
Material:	PP

D. Part No: 12129490

Description:	Connector 3M
Size:	40.0L x 22.0H x 20.3W
Color:	Black
Material:	PA66 HS IM
Terminals:	See Page 2.25

E. Part No: 12129492

Description:	TPA
Color:	Lt. Gray
Material:	PA66 HS IM

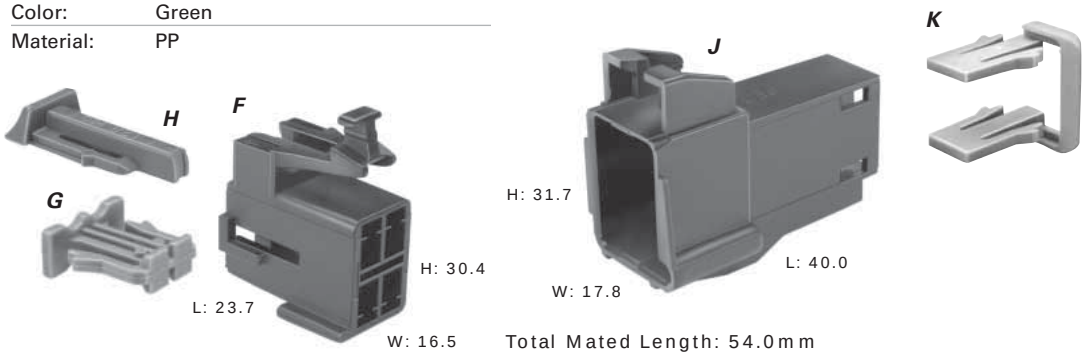

Total Mated Length: 54.0mm

TANGLESS

F. Part No: 12129136 (Black) 15479020 (Cream)

Description:	Connector 4F
Size:	23.7L x 30.4H x 16.5W
Material:	PA66 HS IM
Terminals:	See Page 2.24

G. Part No: 12129138

Description:	TPA
Color:	Lt. Gray
Material:	PA66 HS IM

H. Part No: 12052834

Description:	CPA
Color:	Green
Material:	PP

J. Part No: 12129135

Description:	Connector 4M (Clip Slot–Self Locking)
Size:	40.0L x 31.7H x 17.8W
Color:	Black
Material:	PA66 HS IM
Terminals:	See Page 2.25

K. Part No: 12129137

Description:	TPA
Color:	Lt. Gray
Material:	PA66 HS IM

NOTE: Specifications in this catalog are for general reference only and are subject to change without notice. To verify product information, please contact a Delphi representative.

Peters de Laet
503-661-5088 – phone 503-661-5328 – fax
www.pdel.com

280

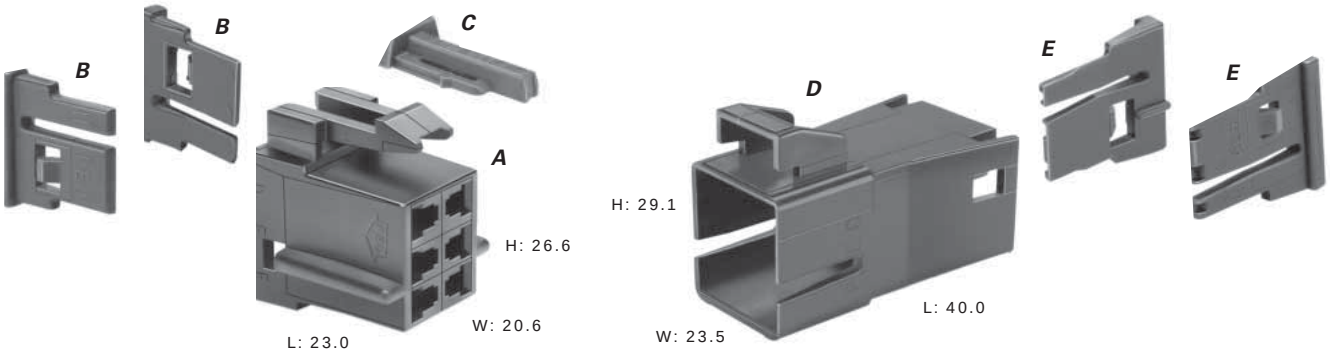

Total Mated Length: 57.0mm

A. Part No: 12064752 (Black)
15479022 (Cream)

Description:	Connector 6F
Size:	23.0L x 26.6H x 20.6W
Material:	PA66 HS IM
Terminals:	See Page 2.24

B. Part No: 12064753

Description:	TPA
Number Req:	2
Color:	Md. Gray
Material:	PA66 HS IM

C. Part No: 12052834

Description:	CPA
Color:	Green
Material:	PP

D. Part No: 12064754

Description:	Connector 6M (Clip Slot–Self Locking)
Size:	40.0L x 29.1H x 23.5W
Color:	Black
Material:	PA6
Terminals:	See Page 2.25

E. Part No: 12064755

Description:	TPA
Number Req:	2
Color:	Blue
Material:	PA66 HS IM

NOTE: Specifications in this catalog are for general reference only and are subject to change without notice. To verify product information, please contact a Delphi representative.

Peters de Laet
503-661-5088 – phone 503-661-5328 – fax
www.pdel.com

280

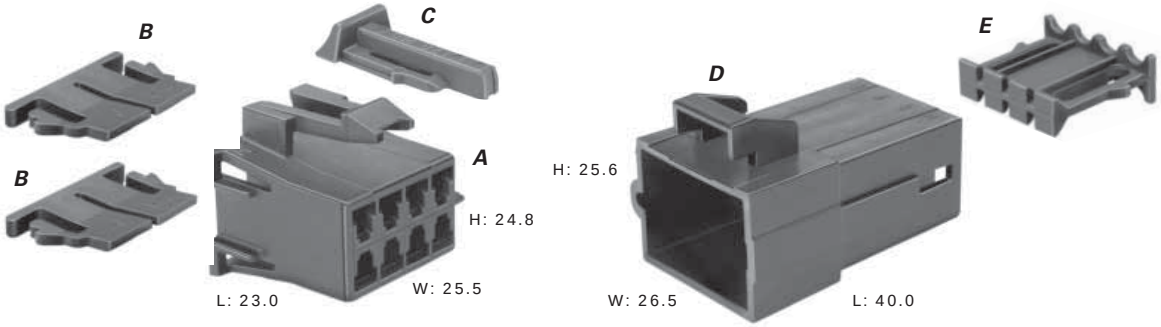

Total Mated Length: 54.0mm

A. Part No: 12064998

Description:	Connector 8F
Size:	23.0L x 24.8H x 25.5W
Color:	Black
Material:	PA66 HS IM
Terminals:	See Page 2.24

B. Part No: 12064999

Description:	TPA
Number Req:	2
Color:	Blue
Material:	PBT

C. Part No: 12052834

Description:	CPA
Color:	Green
Material:	PP

D. Part No: 12066195

Description:	Connector 8M (Clip Slot)
Size:	40.0L x 25.6H x 26.5W
Color:	Black
Material:	PA66 HS IM
Terminals:	See Page 2.25

E. Part No: 12065141

Description:	TPA
Color:	Md. Gray
Material:	PA66 HS IM

NOTE: Specifications in this catalog are for general reference only and are subject to change without notice. To verify product information, please contact a Delphi representative.

Peters de Laet
503-661-5088 – phone 503-661-5328 – fax
www.pdel.com

280

Cross Sectional View

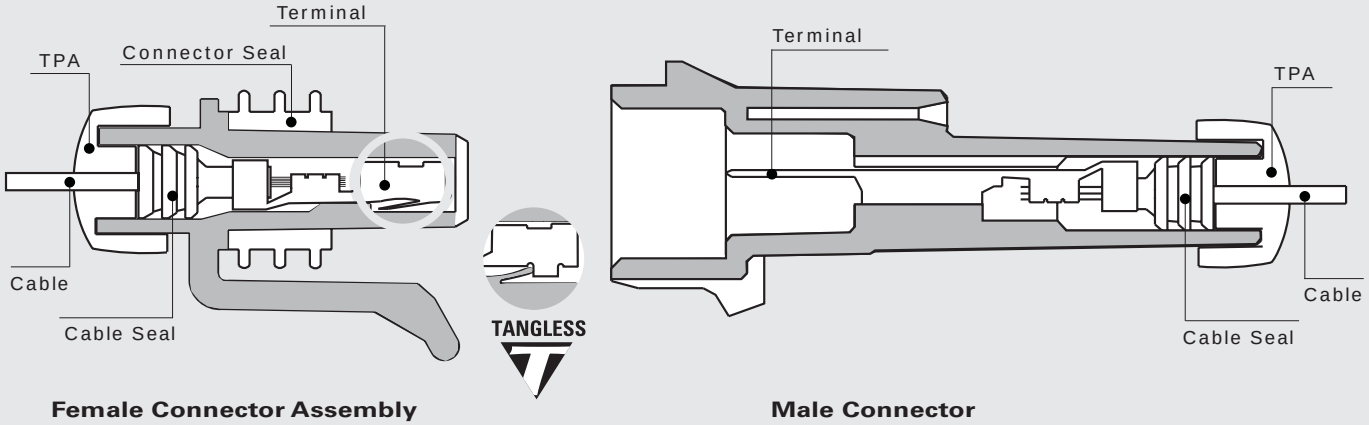

Female Connector Assembly **Male Connector**

TANGLESS

280 Tangless Female Terminals Sealed

Part #	Cable Range (mm²)	Material	Plating
12110853	5.0-3.0	Tin Brass	Tin
12129409	2.0-1.0	Tin Brass	Tin
12110845*	3.0-2.0	Tin Brass	Tin
12110847*	1.0-0.80	Tin Brass	Tin
12110846*	0.50-0.35	Tin Brass	Tin

***Thin Stock**—Electrical current restrictions apply.

TANGLESS

280 Flexlock Female Connector Assemblies Sealed

# Cavities	Conn. Asm.	Color	Material	TPA
7	12110751	Black	PA66 HS IM	12110754
15	12161186	Black	PA66 HS IM	12110782

280 Female Terminals Sealed

Part #	Cable Range (mm²)	Material	Plating
12077413	3.0	Tin Brass	Tin
12129493	3.0-2.0	Tin Brass	Tin
12077411	1.0-0.80-0.50	Tin Brass	Tin
12084201	0.50-0.35	Tin Brass	Tin
12176387	5.0	Beryllium Copper	Silver/Nickel
12176388	3.0-2.0	Beryllium Copper	Silver/Nickel
12176389	1.0-0.80	Beryllium Copper	Silver/Nickel

280.1 Female Pull-to-Seat Terminals Sealed

Part #	Cable Range (mm²)	Material	Plating
12077939	1.0-0.80-0.50	Silicon Bronze	Tin
12103360	0.50-0.35	Silicon Bronze	Tin

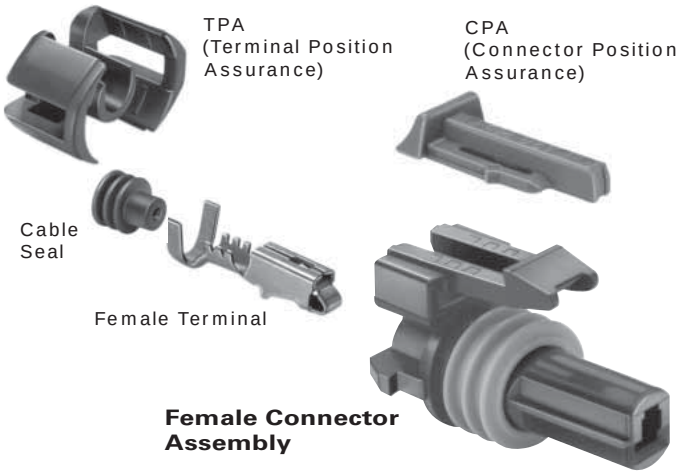

Female Connector Assembly

280 Female Connector Assemblies Sealed

# Cavities	Conn. Asm.	Color	Material	TPA
1	12065172	Black	PA66 HS IM	12065249
2	15300027	Black	PA66 HS IM	15300014
2	12124819	Black	PBT	12020807
3	12040977	Black	PA66 HS IM	12034145
4	12129565	Md. Gray	PA66 HS IM	15300016
5	12084891	Md. Gray	PA66 HS IM	15324857

280 Metri-Pack Cable Seals

Reel Part #	Loose Part #	Cable Dia.	Material	Color
12015360	15324981	4.30-3.45	Silicone	Blue
12015359	15324980	3.49-2.81	Silicone	Gray
12015284	15324982	2.85-2.03	Silicone	Green
12041352	15324984	2.42-2.03	Silicone	Tan
12089444	15324985	2.15-1.60	Silicone	Purple
12034365	15324983	1.70-1.29	Silicone	Dk. Red

NOTE: Specifications in this catalog are for general reference only and are subject to change without notice. To verify product information, please contact a Delphi representative.

Peters de Laet
503-661-5088 – phone 503-661-5328 – fax
www.pdel.com

280

Sealed System Application Information

280 Series Terminals – Tin Plated

CABLE RANGE (mm²): 0.35-5.0

CURRENT RANGE (AMPS): 0-30

TEMP RANGE °C: ..... -40 to 125

RESISTANCE: ..... <10mΩ@20mV

VOLTAGE DROP: ..... <3.0mV/amp

CENTERLINE SPACING (mm): 7.7

BLADE WIDTH (mm): 2.8

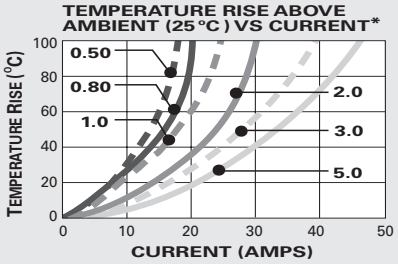

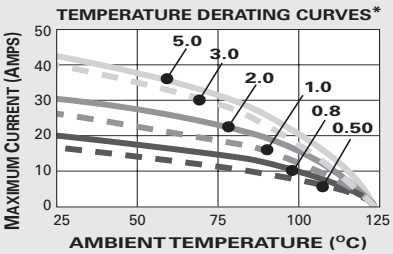

*The test data are based on single circuits in free space and were generated using a "Lumped Resistance" model. This model does not account for all of the variables that would be present in an actual application. For actual product performance, contact your regional support representative.

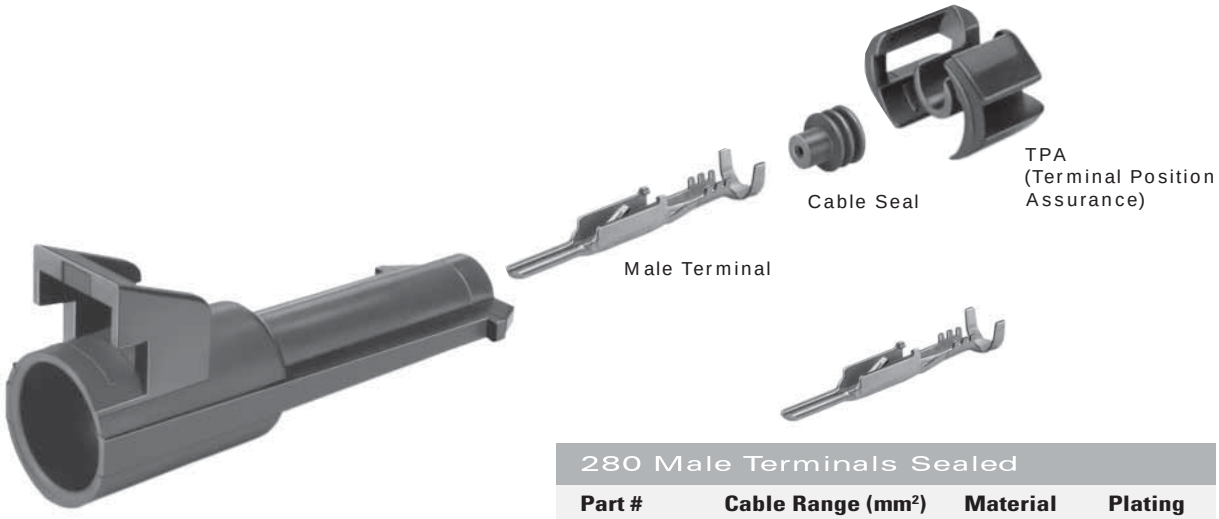

Male Connector

280 Male Terminals Sealed

Part #	Cable Range (mm²)	Material	Plating
12048254	3.0	Tin Brass	Tin
12129497	3.0-2.0	Tin Brass	Tin
12048159	0.80-0.50	Tin Brass	Tin
12124977	0.50-0.35	Tin Brass	Tin

280 Male Connectors Sealed

# Cavities	Connector	Color	Material	TPA
1	12065171	Black	PA66 HS IM	12065249
2	15300002	Black	PA66 HS IM	15300014
2	12059450	Black	PA66 HS IM	12065279
3	15300003	Black	PA66 HS IM	15300015
4	12129600	Dk.Gray	PBT 30% GF	15324063
5	12186400	Gray	PBT 30% GF	12084673
7	12110753	Black	PA66 HS IM	12110754
15	12161187	Black	PA66 HS IM 14% GF	12176865

280 Metri-Pack Cavity Plug*

Part #	Cavity Inside Diameter	Material	Color
12010300	6.7mm	Silicone	Green

*Cavity plugs seal unused female and male cavities.

SECTION NOTES:

- Due to rigid tolerances of connector cavities, it is critical to meet all crimp dimensions as specified.
- Female Connections for device applications, see page 2.38.

NOTE: Specifications in this catalog are for general reference only and are subject to change without notice. To verify product information, please contact a Delphi representative.

Peters de Laet
503-661-5088 – phone 503-661-5328 – fax
www.pdel.com

280

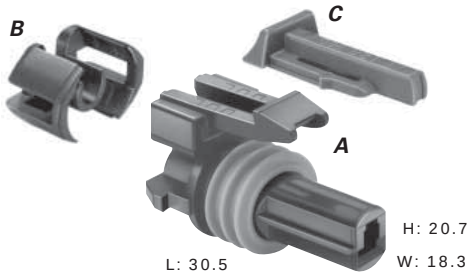

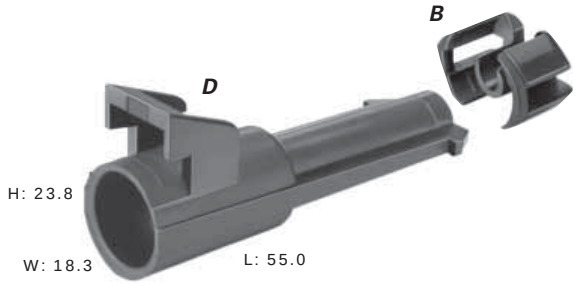

Total Mated Length: 70.3mm

A. Part No: 12065172

Description:	Connector Assembly 1F
Size:	30.5L x 20.7H x 18.3W
Color:	Black
Material:	PA66 HS IM
Terminals:	See Page 2.30
Seals/Plugs:	See Page 2.30, 2.31

B. Part No: 12065249

Description:	TPA
Number Req:	2
Color:	Black
Material:	PA66 HS IM

C. Part No: 12052834

Description:	CPA
Color:	Green
Material:	PP

D. Part No: 12065171

Description:	Connector 1M
Size:	55.0L x 23.8H x 18.3W
Color:	Black
Material:	PA66 HS IM
Terminals:	See Page 2.31
Seals/Plugs:	See Page 2.30, 2.31

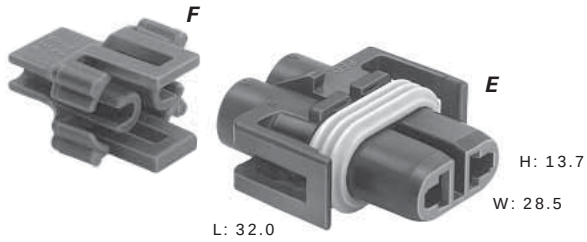

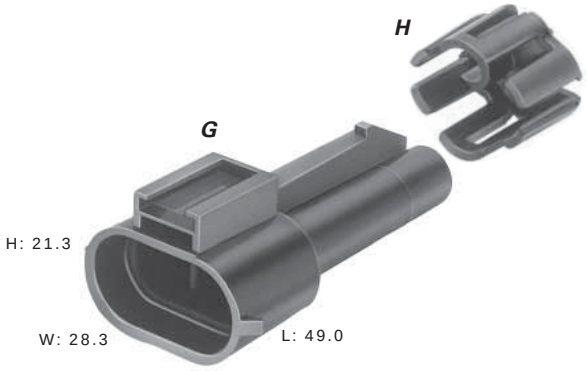

Total Mated Length: 81.9mm

E. Part No: 12124819

Description:	Connector Assembly 2F
Size:	32.0L x 13.7H x 28.5W
Color:	Black
Material:	PBT
Terminals:	See Page 2.30
Seals/Plugs:	See Page 2.30, 2.31

F. Part No: 12020807

Description:	TPA
Color:	Md. Gray
Material:	PA66 HS IM

G. Part No: 12059450

Description:	Connector 2M (Clip Slot)
Size:	49.0L x 21.3H x 28.3W
Color:	Black
Material:	PA66 HS IM
Terminals:	See Page 2.31
Seals/Plugs:	See Page 2.30, 2.31

H. Part No: 12065279

Description:	TPA
Color:	Black
Material:	PA6

NOTE: Specifications in this catalog are for general reference only and are subject to change without notice. To verify product information, please contact a Delphi representative.

Peters de Laet
503-661-5088 – phone 503-661-5328 – fax
www.pdel.com

280

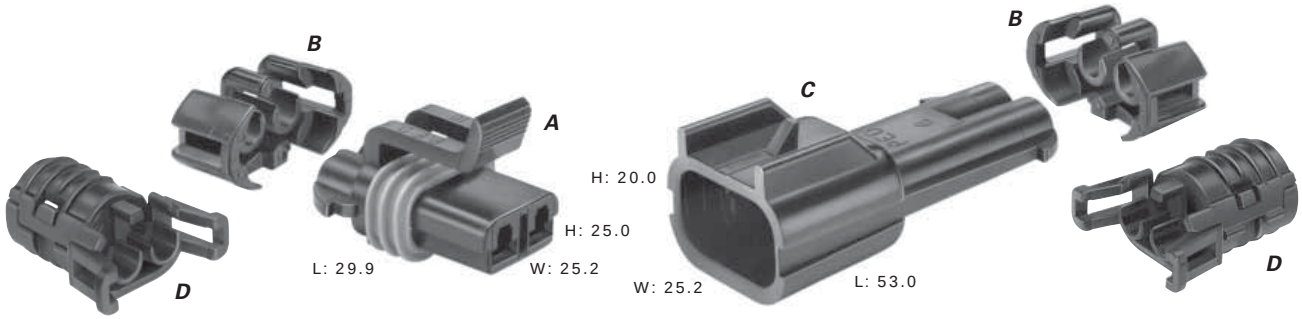

Total Mated Length: 66.8mm

A. Part No: 15300027

Description:	Connector Assembly 2F
Size:	29.9L x 25.0H x 25.2W
Color:	Black
Material:	PA66 HS IM
Terminals:	See Page 2.30
Seals/Plugs:	See Page 2.30, 2.31

B. Part No: 15300014

Description:	TPA
Number Req.:	2
Color:	Blue
Material:	PA66 HS IM

C. Part No: 15300002

Description:	Connector 2M
Size:	53.0L x 20.0H x 25.2W
Color:	Black
Material:	PA66 HS IM
Terminals:	See Page 2.31
Seals/Plugs:	See Page 2.30, 2.31

D. Part No: 15327747 (Optional)

Description:	Conduit TPA
Number Req.:	2
Color:	Black
Material:	PA6

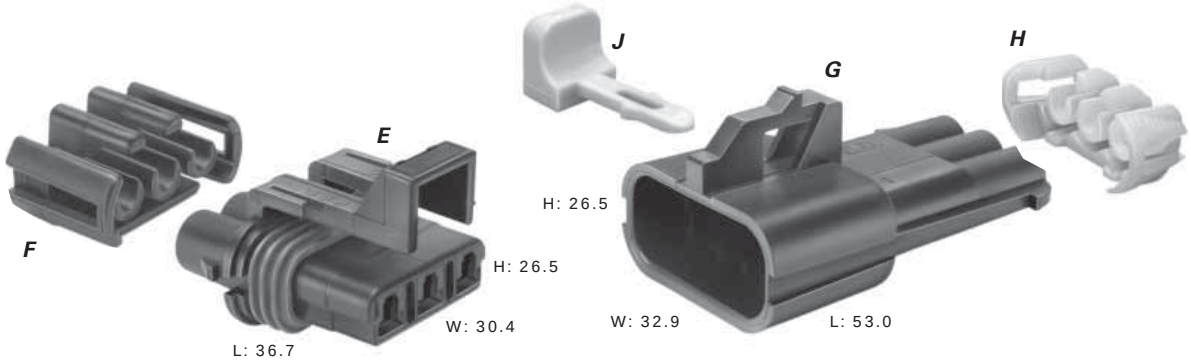

Total Mated Length: 76.1mm

E. Part No: 12040977

Description:	Connector Assembly 3F
Size:	36.7L x 26.5H x 30.4W
Color:	Black
Material:	PA66 HS IM
Terminals:	See Page 2.30
Seals/Plugs:	See Page 2.30, 2.31

F. Part No: 12034145

Description:	TPA
Color:	Black
Material:	PA66 HS IM

G. Part No: 15300003

Description:	Connector 3M (Clip Slot)
Size:	53.0L x 26.5H x 32.9W
Color:	Black
Material:	PA66 HS IM
Terminals:	See Page 2.31
Seals/Plugs:	See Page 2.30, 2.31

H. Part No: 15300015

Description:	TPA
Color:	Cream
Material:	PA66 HS IM

J. Part No: 12020833

Description:	CPA
Color:	Gray
Material:	PBT

NOTE: Specifications in this catalog are for general reference only and are subject to change without notice. To verify product information, please contact a Delphi representative.

Peters de Laet
503-661-5088 – phone 503-661-5328 – fax
www.pdel.com

280

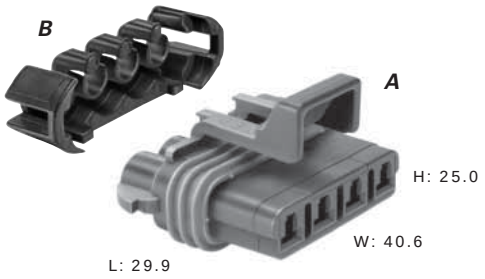

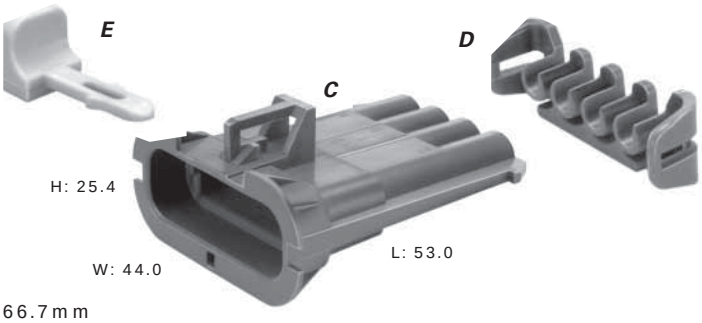

Total Mated Length: 66.7mm

A. Part No: 12129565

Description:	Connector Assembly 4F
Size:	29.9L x 25.0H x 40.6W
Color:	Md. Gray
Material:	PA66 HS IM
Terminals:	See Page 2.30
Seals/Plugs:	See Page 2.30, 2.31

B. Part No: 15300016

Description:	TPA
Color:	Black
Material:	PA66 HS IM

C. Part No: 12129600

Description:	Connector 4M (Clip Slot–Self Locking)
Size:	53.0L x 25.4H x 44.0W
Color:	Dk. Gray
Material:	PBT 30% GF
Terminals:	See Page 2.31
Seals/Plugs:	See Page 2.30, 2.31

D. Part No: 15324063

Description:	TPA
Color:	Blue
Material:	PA66 HS IM

E. Part No: 12020833

Description:	CPA
Color:	Gray
Material:	PBT

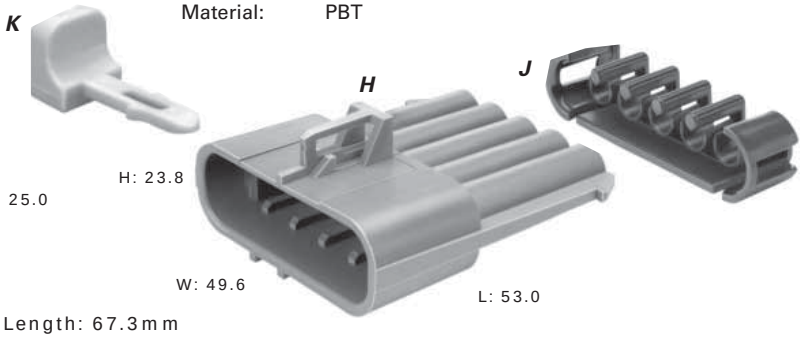

Total Mated Length: 67.3mm

F. Part No: 12084891

Description:	Connector Assembly 5F
Size:	29.9L x 25.0H x 48.3W
Color:	Md. Gray
Material:	PA66 HS IM
Terminals:	See Page 2.30
Seals/Plugs:	See Page 2.30, 2.31

G. Part No: 15324857

Description:	TPA
Color:	Black
Material:	PA66 HS IM

H. Part No: 12186400

Description:	Connector 5M (Clip Slot–Self Locking)
Size:	53.0L x 23.8H x 49.6W
Color:	Gray
Material:	PBT 30% GF
Terminals:	See Page 2.31
Seals/Plugs:	See Page 2.30, 2.31

J. Part No: 12084673

Description:	TPA
Color:	Black
Material:	PA66 HS IM

K. Part No: 12020833

Description:	CPA
Color:	Gray
Material:	PBT

NOTE: Specifications in this catalog are for general reference only and are subject to change without notice. To verify product information, please contact a Delphi representative.

Peters de Laet
503-661-5088 – phone 503-661-5328 – fax
www.pdel.com

280

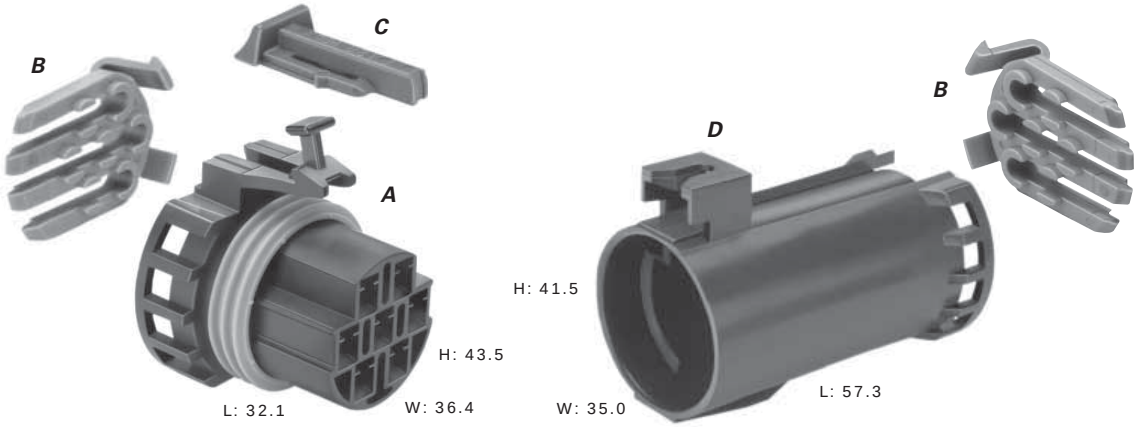

Total Mated Length: 77.3mm

TANGLESS

A. Part No: 12110751 (Black)
12129613 (Md. Gray)
12146841 (Cream)

Description:	Connector Assembly 7F
Size:	32.1L x 43.5H x 36.4W
Material:	PA66 HS IM
Terminals:	See Page 2.30
Seals/Plugs:	See Page 2.30, 2.31

B. Part No: 12110754

Description:	TPA
Number Req:	2
Color:	Lt. Gray
Material:	PA66 HS IM

C. Part No: 12052834

Description:	CPA
Color:	Green
Material:	PP

D. Part No: 12110753 (Black)
12129614 (Md. Gray)
12146840 (Cream)

Description:	Connector 7M (Clip Slot–Self Locking)
Size:	57.3L x 41.5H x 35.0W
Material:	PA66 HS IM
Terminals:	See Page 2.31
Seals/Plugs:	See Page 2.30, 2.31

NOTE: Specifications in this catalog are for general reference only and are subject to change without notice. To verify product information, please contact a Delphi representative.

Peters de Laet
503-661-5088 – phone 503-661-5328 – fax
www.pdel.com

280

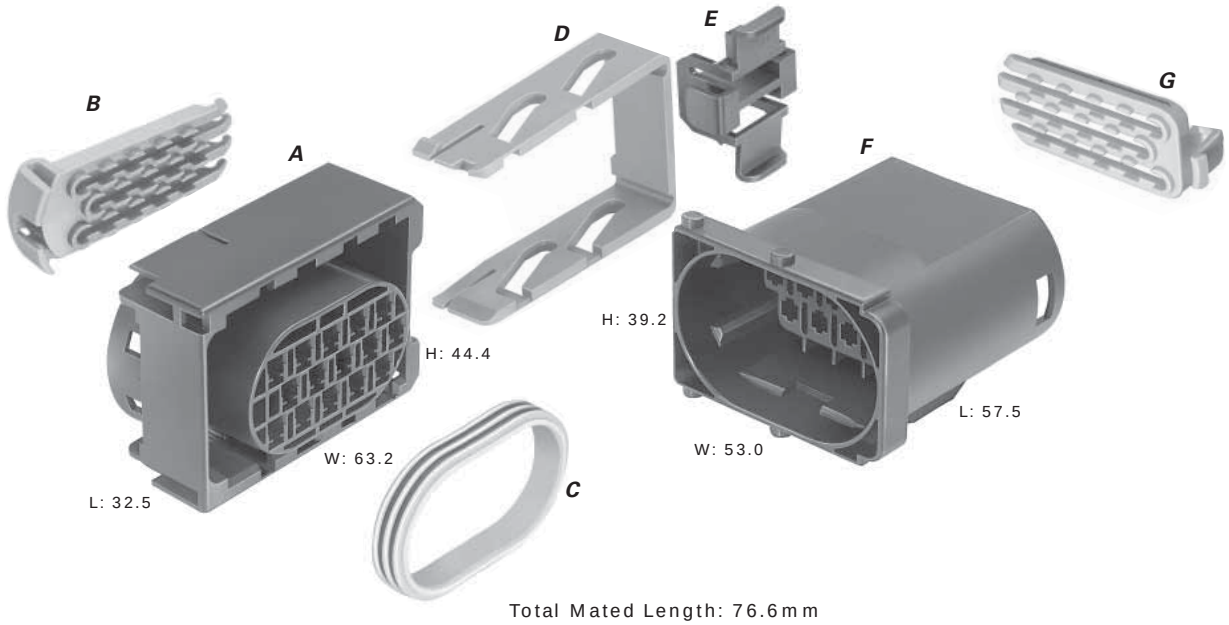

Total Mated Length: 76.6mm

TANGLESS

A. Part No: 12161186

Description:	Connector 15F
Size:	32.5L x 44.4H x 63.2W
Color:	Black
Material:	PA66 HS IM
Terminals:	See Page 2.30
Seals/Plugs:	See Page 2.30, 2.31

B. Part No: 12110782

Description:	TPA
Color:	Md. Gray
Material:	PA66 HS IM

C. Part No: 12110822

Description:	Connector Seal
Color:	Green
Material:	Silicone

D. Part No: 12161185

Description:	CPA Slide Lock Assist
Color:	Dk. Gray
Material:	PA66 HS IM 14% GF

E. Part No: 12176640

Description:	Spacer Lock
Color:	Black
Material:	PP

F. Part No: 12161187

Description:	Connector 15M (Clip Slot–Self Locking)
Size:	57.5L x 39.2H x 53.0W
Color:	Black
Material:	PA66 HS IM 14% GF
Terminals:	See Page 2.31
Seals/Plugs:	See Page 2.30, 2.31

G. Part No: 12176865

Description:	TPA
Color:	Lt. Gray
Material:	PA66 HS IM

NOTE: Specifications in this catalog are for general reference only and are subject to change without notice. To verify product information, please contact a Delphi representative.

Peters de Laet
503-661-5088 – phone 503-661-5328 – fax
www.pdel.com

280 Device Connections

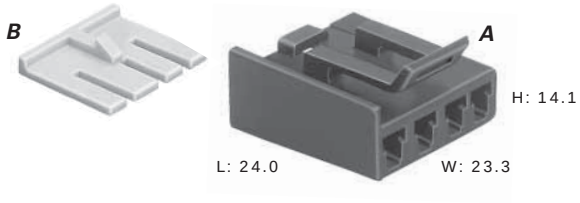

A. Part No: 12052856

Description:	Connector 4F
Size:	24.0L x 14.1H x 23.3W
Color:	Black
Material:	PA66 HS IM
Terminals:	See Page 2.24
Typical App:	Dimmer Switch

B. Part No: 15324456

Description:	TPA
Color:	Dk. Green
Material:	PA66 HS IM

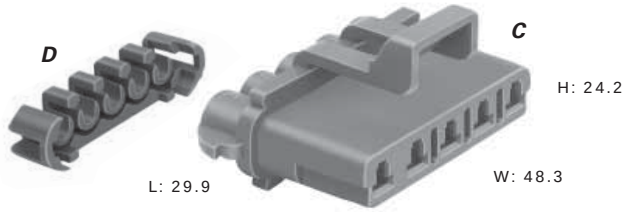

C. Part No: 12084890

Description:	Connector 5F
Size:	29.9L x 24.2H x 48.3W
Color:	Md. Gray
Material:	PA66 HS IM
Terminals:	See Page 2.24
Typical App:	Tail Lamp Module

D. Part No: 15324857

Description:	TPA
Color:	Black
Material:	PA66 HS IM

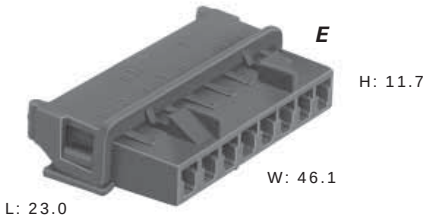

E. Part No: 12041301*

Description:	Connector 8F
Size:	23.0L x 11.7H x 46.1W
Color:	Black
Material:	PP
Terminals:	See Page 2.24
Typical App:	Various

*Hinged secondary lock.

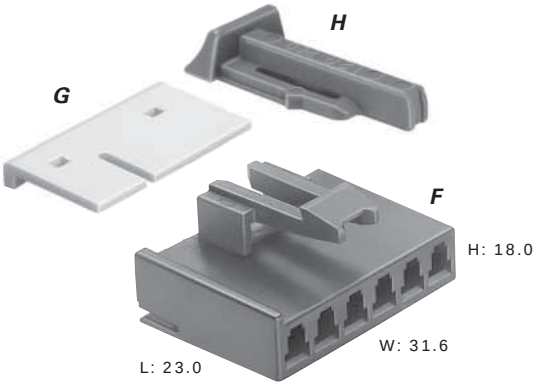

F. Part No: 12092254

Description:	Connector 6F
Size:	23.0L x 18.0H x 31.6W
Color:	Black
Material:	PA66 HS IM
Terminals:	See Page 2.24
Typical App:	Wiper Switch

G. Part No: 12092252

Description:	TPA
Color:	Cream
Material:	PA6

H. Part No: 12052834

Description:	CPA
Color:	Green
Material:	PP

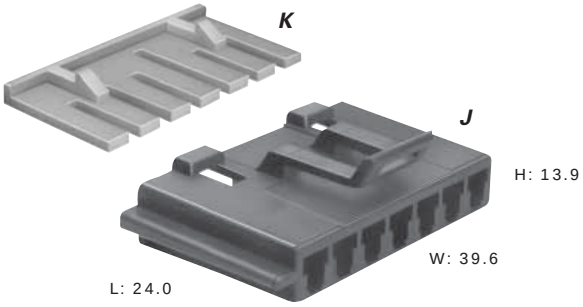

J. Part No: 12052854

Description:	Connector 7F
Size:	24.0L x 13.9H x 39.6W
Color:	Black
Material:	PA66 HS IM
Terminals:	See Page 2.24
Typical App:	Wiper Switch

K. Part No: 12124811

Description:	TPA
Color:	Cream
Material:	PA66 HS IM

NOTE: Specifications in this catalog are for general reference only and are subject to change without notice. To verify product information, please contact a Delphi representative.

Peters de Laet
503-661-5088 – phone 503-661-5328 – fax
www.pdel.com

280 Device Connections

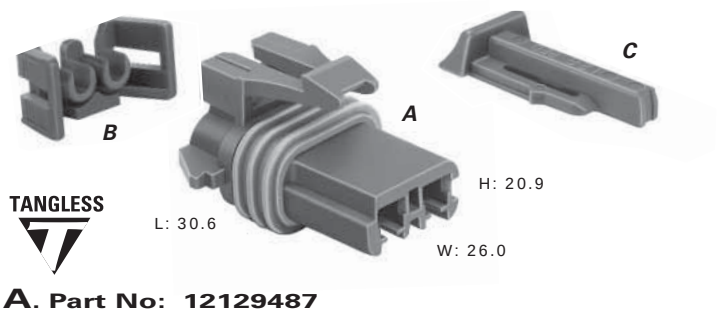

TANGLESS

A. Part No: 12129487

Description:	Connector Assembly 2F
Size:	30.6L x 20.9H x 26.0W
Color:	Md. Gray
Material:	PA66 HS IM
Terminals:	See Page 2.30
Seals/Plugs:	See Page 2.30, 2.31
Typical App:	Window Lift Motor

B. Part No: 12077904

Description:	TPA
Color:	Blue
Material:	PA66 HS IM

C. Part No: 12052834

Description:	CPA
Color:	Green
Material:	PP

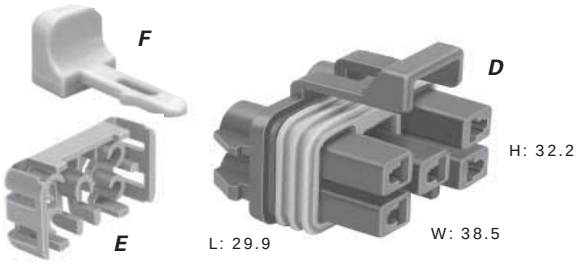

D. Part No: 12124634

Description:	Connector Assembly 5F
Size:	29.9L x 32.2H x 38.5W
Color:	Black
Material:	PA6
Terminals:	See Page 2.30
Seals/Plugs:	See Page 2.30, 2.31
Typical App:	Wiper Switch

E. Part No: 12052816

Description:	TPA
Color:	Md. Gray
Material:	PA66 HS IM

F. Part No: 12020833

Description:	CPA
Color:	Gray
Material:	PBT

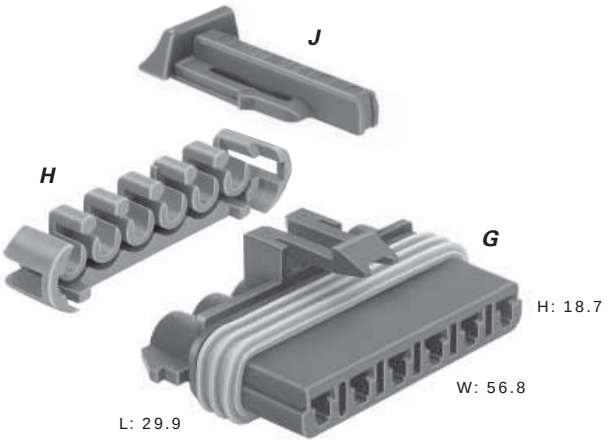

G. Part No: 12059573

Description:	Connector Assembly 6F
Size:	29.9L x 18.7H x 56.8W
Color:	Black
Material:	PA66
Terminals:	See Page 2.30
Seals/Plugs:	See Page 2.30, 2.31
Typical App:	Various

H. Part No: 12059195

Description:	TPA
Color:	Blue
Material:	PA6

J. Part No: 12052834

Description:	CPA
Color:	Green
Material:	PP

NOTE: Specifications in this catalog are for general reference only and are subject to change without notice. To verify product information, please contact a Delphi representative.

Peters de Laet
503-661-5088 – phone 503-661-5328 – fax
www.pdel.com

280.1 Pull-to-Seat

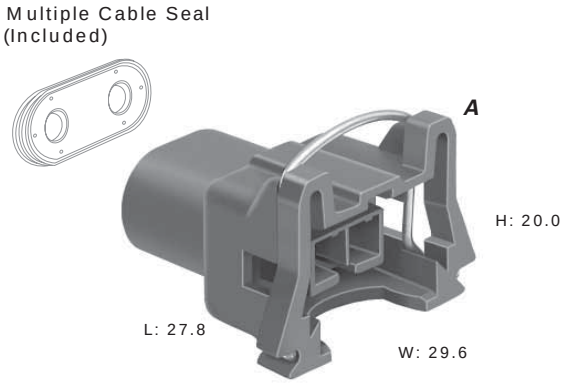

A. Part No:	**12129142 (Black/Gray Seal)**
	2.66 - 2.0 Cable O.D.
Part No:	**12129140 (Black/Purple Seal)**
	2.15 - 1.65 Cable O.D.
Part No:	**12110179 (Black/Orange Red Seal)**
	1.85 - 1.47 Cable O.D.
Description:	Connector Assembly 2F
Size:	27.8L x 20.0H x 29.6W
Material:	PA66 HS 33% GF
Terminals:	See Page 2.30
Typical App:	Fuel Injector

NOTE: Specifications in this catalog are for general reference only and are subject to change without notice. To verify product information, please contact a Delphi representative.

Peters de Laet
503-661-5088 – phone 503-661-5328 – fax
www.pdel.com

Peters de Laet
503-661-5088 – phone 503-661-5328 – fax
www.pdel.com

480

Available in device and in-line connections for vehicle applications, Metri-Pack 480 Series connectors can meet or exceed the requirements for most marine, appliance, and industrial control applications.

Ideally suited for high current applications that do not require environmental protection, Metri-Pack 480 Series products are extremely rugged and versatile.

Available in device and in-line connections for underhood vehicle applications, Metri-Pack 480 Series sealed connectors can meet or exceed the requirements for most marine, appliance, and industrial control applications.

Utilizing triple-rib peripheral silicone rubber seals, Metri-Pack 480 Series sealed systems are ideally suited for high current applications that require protection from environmental hazards.

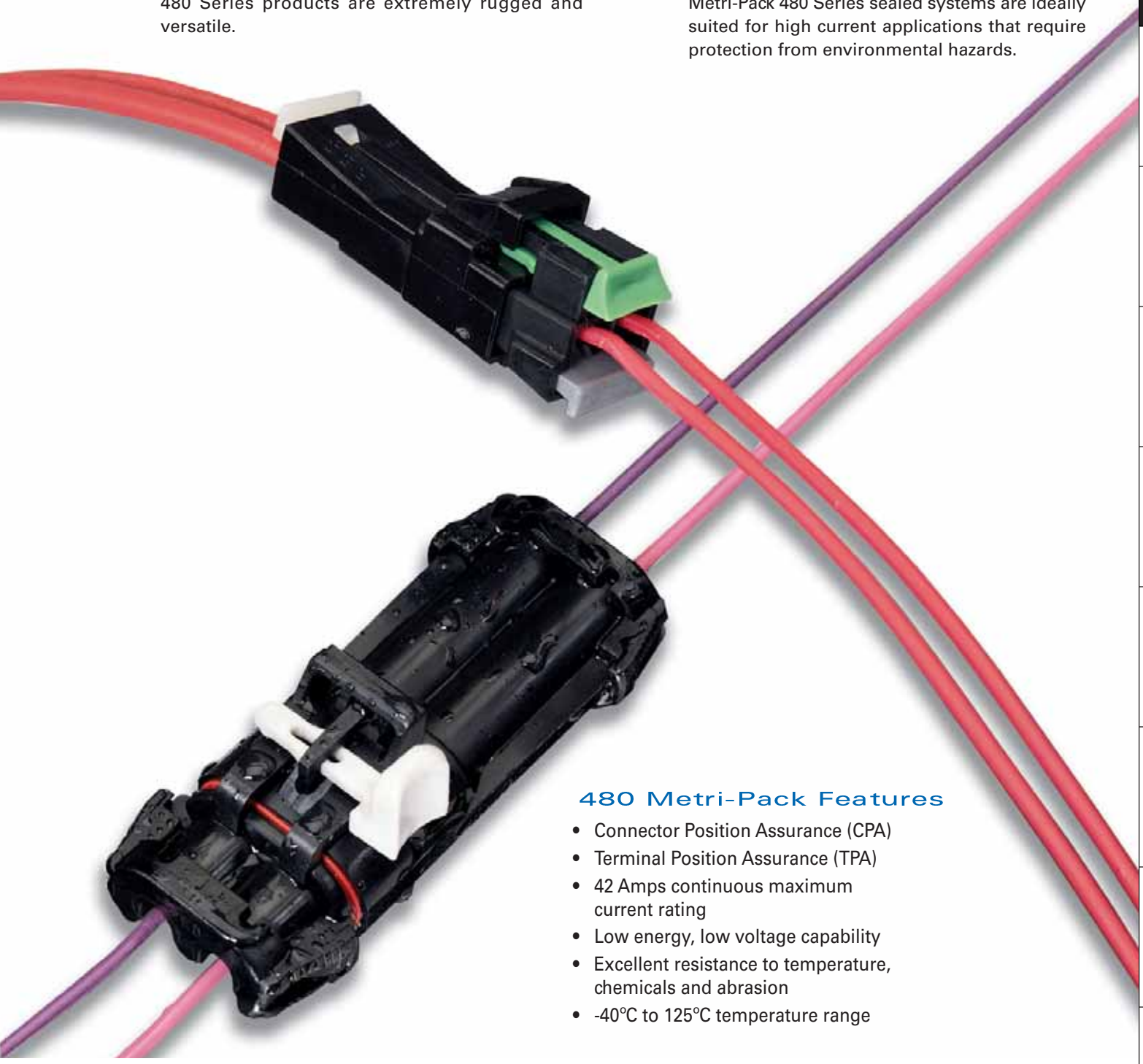

480 Metri-Pack Features

- Connector Position Assurance (CPA)
- Terminal Position Assurance (TPA)
- 42 Amps continuous maximum current rating
- Low energy, low voltage capability
- Excellent resistance to temperature, chemicals and abrasion
- -40°C to 125°C temperature range

Peters de Laet
503-661-5088 – phone 503-661-5328 – fax
www.pdel.com

480

Cross Sectional View

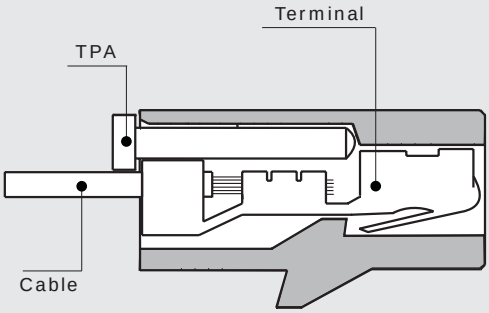

Female Connector

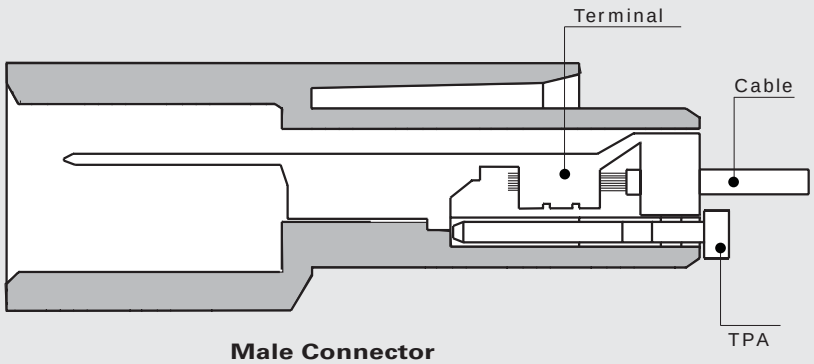

Male Connector

TPA
(Terminal Position
Assurance)

Female Terminal

CPA
(Connector Position
Assurance)

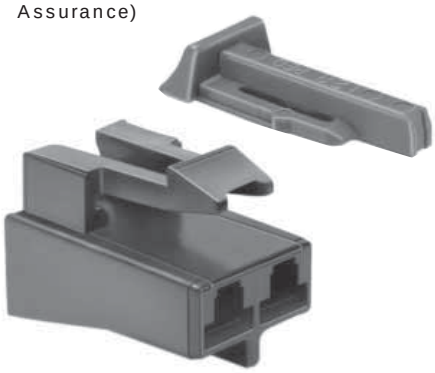

Female Connector

480 Female Terminals Unsealed

Part #	Cable Range (mm²)	Material	Plating
12084595	5.0-3.0	Tin Brass	Tin
12052221	3.0	Tin Brass	Tin
12124304	2.0-1.0	Tin Brass	Tin
12015860	0.80-0.50	Tin Brass	Tin
12052219	0.50-0.35	Tin Brass	Tin
12020366	2.0-1.0 (1 Req'd.)	Tin Brass	Tin
	0.80-0.50 (1 Req'd.)		

480 Female Connectors Unsealed

# Cavities	Connector	Color	Material	TPA
1	12015952	Md.Gray	PA66 HS IM	–
2	12064749	Black	PA66 HS IM	12059860

NOTE: Specifications in this catalog are for general reference only and are subject to change without notice. To verify product information, please contact a Delphi representative.

Peters de Laet
503-661-5088 – phone 503-661-5328 – fax
www.pdel.com

480

Unsealed System Application Information

CABLE RANGE (mm²): 0.35-5.0

CURRENT RANGE (AMPS): 0-42

TEMP RANGE °C: ..... -40 to 125

RESISTANCE: ..... <10mΩ@20mV

VOLTAGE DROP: ..... <3.0mV/amp

CENTERLINE SPACING (mm): 6.9

BLADE WIDTH (mm): 4.8

480 Series Terminals – Tin Plated

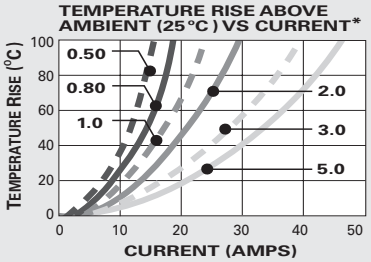

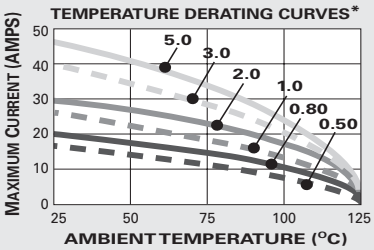

*The test data are based on single circuits in free space and were generated using a "Lumped Resistance" model. This model does not account for all of the variables that would be present in an actual application. For actual product performance, contact your regional support representative.

Male Connector

Male Terminal

TPA
(Terminal Position Assurance)

480 Male Connectors Unsealed

# Cavities	Connector	Color	Material	TPA
1	12015987	Md. Gray	PA66 HS IM	–
2	12064750	Black	PA66 HS IM	12064751

480 Male Terminals Unsealed

Part #	Cable Range (mm²)	Material	Plating
12033820	5.0-3.0	Tin Brass	Tin over Copper
12052827	3.0	Tin Brass	Tin over Copper
12020120	2.0-1.0	Tin Brass	Tin over Copper
12020119	0.80-0.50	Tin Brass	Tin over Copper
12066269	0.50-0.35	Tin Brass	Tin over Copper
12020784	0.35 (2 Req'd.)	Tin Brass	Tin over Copper

SECTION NOTES:

- Due to rigid tolerances of connector cavities, it is critical to meet all crimp dimensions as specified.
- Female connections for device applications, see page 2.49.

NOTE: Specifications in this catalog are for general reference only and are subject to change without notice. To verify product information, please contact a Delphi representative.

Peters de Laet
503-661-5088 – phone 503-661-5328 – fax
www.pdel.com

480

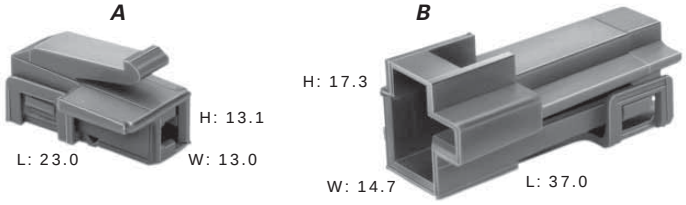

Total Mated Length: 49.6mm

A. Part No: 12015952*

Description:	Connector 1F
Size:	23.0L x 13.1H x 13.0W
Color:	Md. Gray
Material:	PA66 HS IM
Terminals:	See Page 2.42

*Hinged secondary lock

B. Part No: 12015987*

Description:	Connector 1M
Size:	37.0L x 17.3H x 14.7W
Color:	Md. Gray
Material:	PA66 HS IM
Terminals:	See Page 2.43

*Hinged secondary lock

NOTE: Specifications in this catalog are for general reference only and are subject to change without notice. To verify product information, please contact a Delphi representative.

Peters de Laet
503-661-5088 – phone 503-661-5328 – fax
www.pdel.com

480

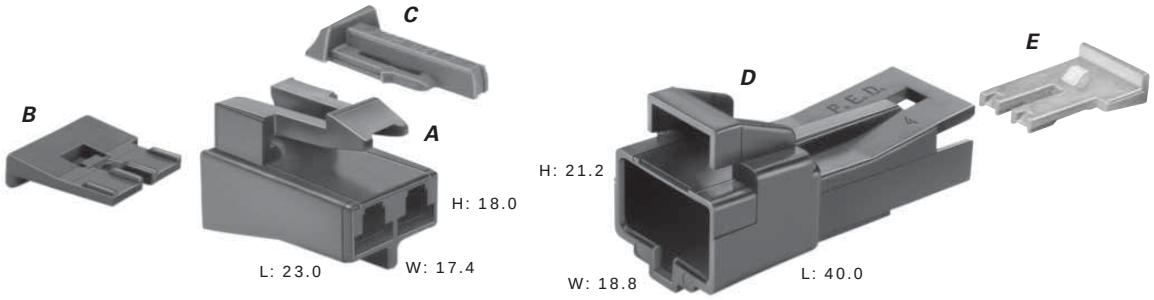

Total Mated Length: 53.9mm

A. Part No: 12064749

Description:	Connector 2F
Size:	23.0L x 18.0H x 17.4W
Color:	Black
Material:	PA66 HS IM
Terminals:	See Page 2.42

B. Part No: 12059860

Description:	TPA
Color:	Md. Gray
Material:	PA66 HS IM

C. Part No: 2052834

Description:	CPA
Color:	Green
Material:	PP

D. Part No: 12064750

Description:	Connector 2M (Clip Slot)
Size:	40.0L x 21.2H x 18.8W
Color:	Black
Material:	PA66 HS IM
Terminals:	See Page 2.43

E. Part No: 12064751

Description:	TPA
Color:	Cream
Material:	PA66 HS IM

NOTE: Specifications in this catalog are for general reference only and are subject to change without notice. To verify product information, please contact a Delphi representative.

Peters de Laet
503-661-5088 – phone 503-661-5328 – fax
www.pdel.com

480

Cross Sectional View

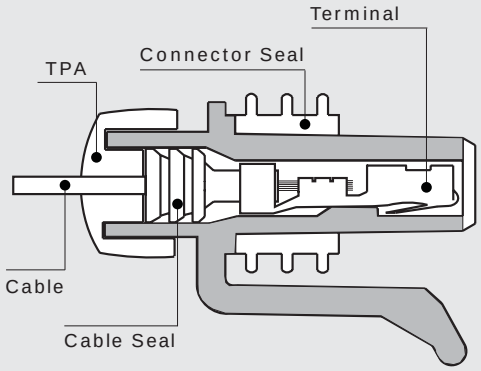

Female Connector Assembly

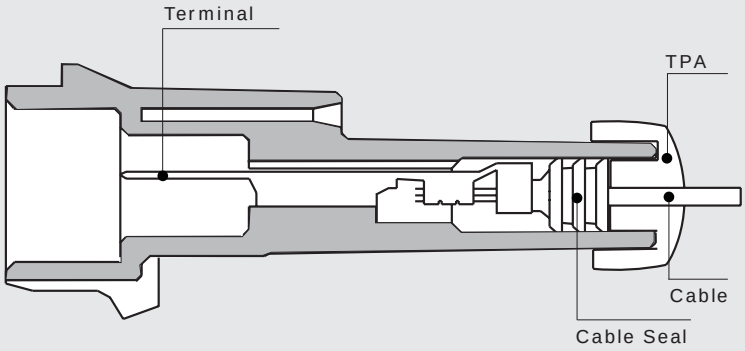

Male Connector

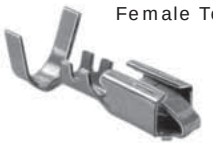

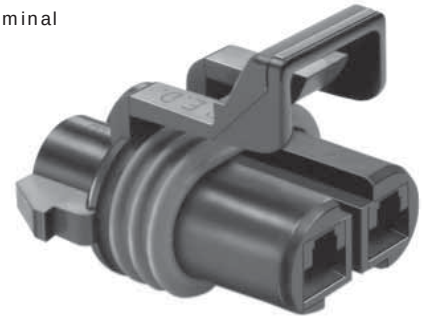

Female Connector Assembly

480 Female Terminals Sealed

Part #	Cable Range (mm²)	Material	Plating
12052139	5.0-3.0	Tin Brass	Tin
12048451	2.0-1.0	Tin Brass	Tin
12048450	0.80-0.50	Tin Brass	Tin

480 Metri-Pack Cable Seals

Reel Part #	Loose Part #	Cable Dia.	Material	Color
12065703	15324987	5.16-4.40	Silicone	Orange
12052453	15324990	4.50-3.61	Silicone	Purple
12052452	15324989	3.76-2.81	Silicone	Red
12048433	15324988	2.85-2.01	Silicone	White
12052931	15324991	2.15-1.60	Silicone	Yellow
12162068	15324992	1.70-1.29	Silicone	Pink

480 Female Connector Assembly Sealed

# Cavities	Conn. Asm.	Color	Material	TPA
2	12052613	Black	PA66 HS IM	12059897

NOTE: Specifications in this catalog are for general reference only and are subject to change without notice. To verify product information, please contact a Delphi representative.

Peters de Laet
503-661-5088 – phone 503-661-5328 – fax
www.pdel.com

480

Sealed System Application Information

480 Series Terminals – Tin Plated

CABLE RANGE (mm²): 0.50-5.0

CURRENT RANGE (AMPS): 0-42

TEMP RANGE °C: ..... -40 to 125

RESISTANCE: ..... <10mΩ@20mV

VOLTAGE DROP: ..... <3.0mV/amp

CENTERLINE SPACING (mm): 9.5

BLADE WIDTH (mm): 4.8

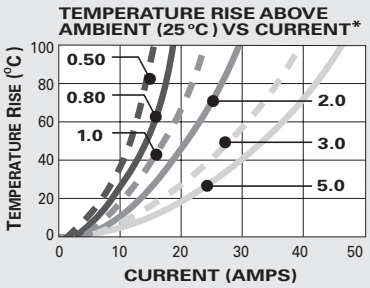

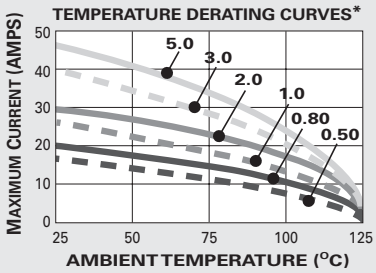

*The test data are based on single circuits in free space and were generated using a "Lumped Resistance" model. This model does not account for all of the variables that would be present in an actual application. For actual product performance, contact your regional support representative.

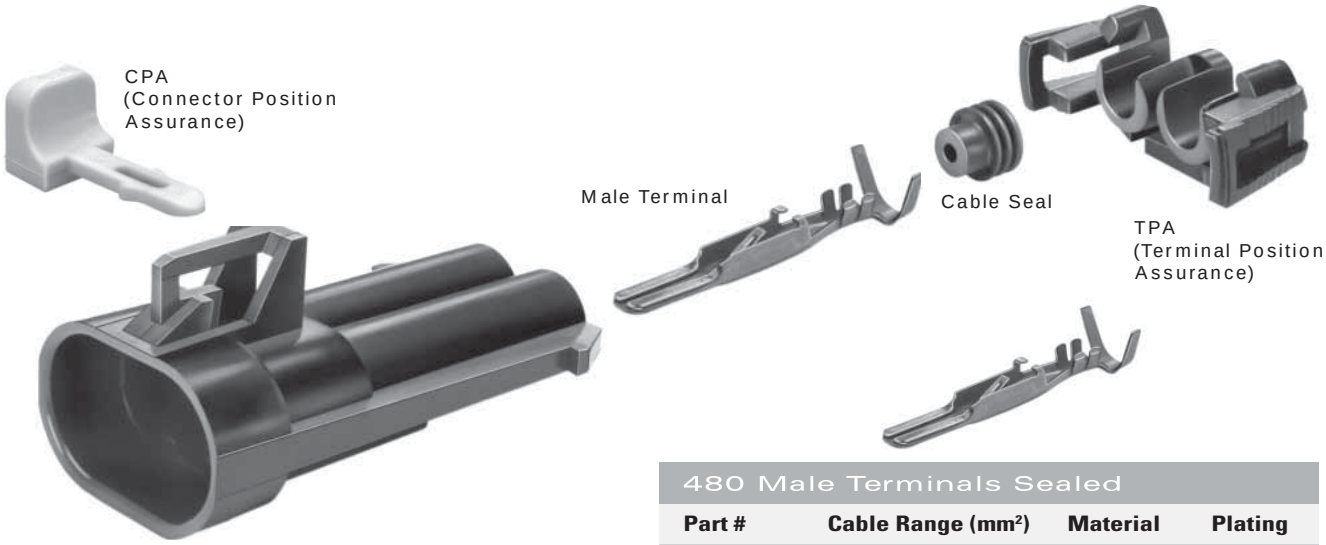

Male Connector

480 Male Terminals Sealed

Part #	Cable Range (mm²)	Material	Plating
12052172	5.0	Tin Brass	Tin
12065197	3.0	Tin Brass	Tin
12065196	2.0-1.0	Tin Brass	Tin

480 Male Connector Sealed

# Cavities	Connector	Color	Material	TPA
2	12065863	Black	PA66 HS IM	12059897

480 Metri-Pack Cavity Plug*

Part #	Cavity Inside Diameter	Material	Color
12066082	8.5mm	Silicone	Green

*Cavity plugs seal unused female and male cavities

SECTION NOTES:

- Due to rigid tolerances of connector cavities, it is critical to meet all crimp dimensions as specified.
- Female connections for device applications, see page 2.50.

NOTE: Specifications in this catalog are for general reference only and are subject to change without notice. To verify product information, please contact a Delphi representative.

Peters de Laet
503-661-5088 – phone 503-661-5328 – fax
www.pdel.com

480

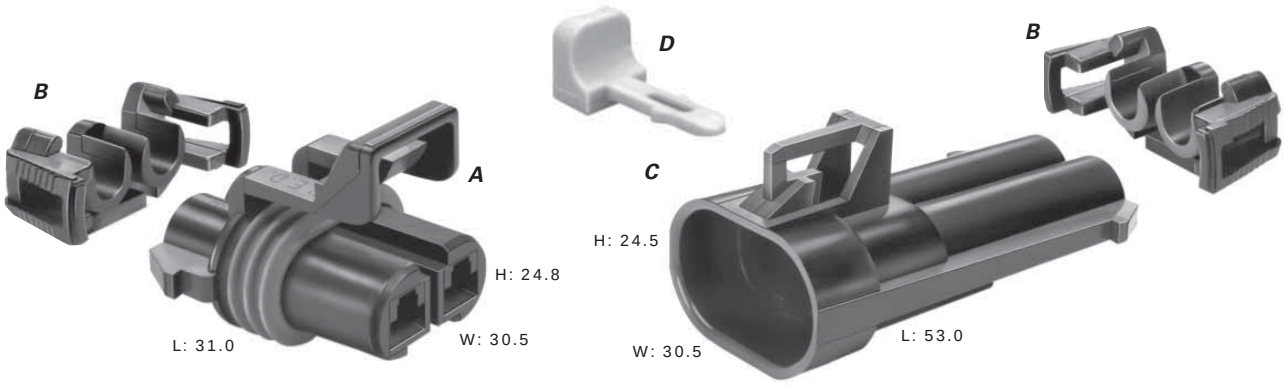

Total Mated Length: 69.2mm

A. Part No: 12052613

Description:	Connector Assembly 2F
Size:	31.0L x 24.8H x 30.5W
Color:	Black
Material:	PA66 HS IM
Terminals:	See Page 2.46
Seals/Plugs:	See Page 2.46, 2.47

B. Part No: 12059897

Description:	TPA
Number Req:	2
Color:	Black
Material:	PA66 HS IM

C. Part No: 12065863

Description:	Connector 2M (Clip Slot)
Size:	53.0L x 24.5H x 30.5W
Color:	Black
Material:	PA66 HS IM
Terminals:	See Page 2.47
Seals/Plugs:	See Page 2.46, 2.47

D. Part No: 12020833

Description:	CPA
Color:	Gray
Material:	PBT

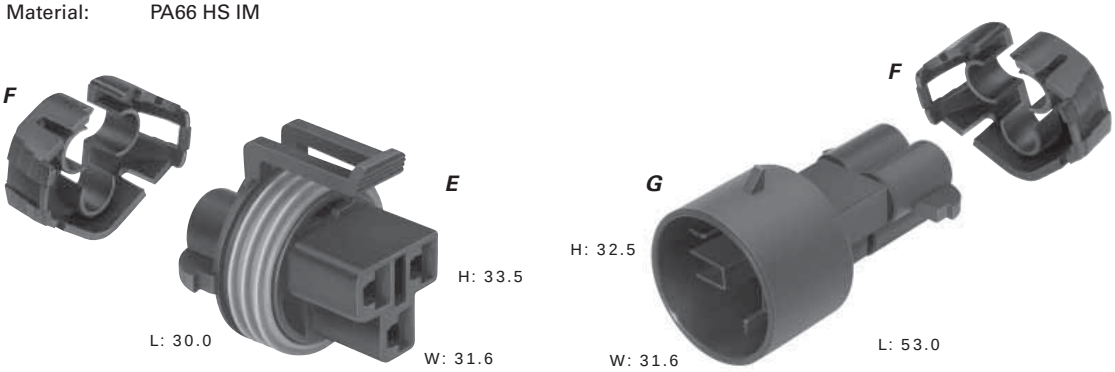

Total Mated Length: 66.5mm

E. Part No: 12131592

Description:	Connector Assembly 3F
Size:	30.0L x 33.5H x 31.6W
Color:	Black
Material:	PA66 25% GF
Terminals:	See Page 2.46
Seals/Plugs:	See Page 2.46, 2.47

F. Part No: 12131543

Description:	TPA
Number Req:	2
Color:	Black
Material:	PA66

G. Part No: 15344628

Description:	Connector 3M
Size:	53.0L x 32.5H x 31.6W
Color:	Black
Material:	PA6 25% GF
Terminals:	See Page 2.47
Seals/Plugs:	See Page 2.46, 2.47

NOTE: Specifications in this catalog are for general reference only and are subject to change without notice. To verify product information, please contact a Delphi representative.

Peters de Laet
503-661-5088 – phone 503-661-5328 – fax
www.pdel.com

480 Device Connections

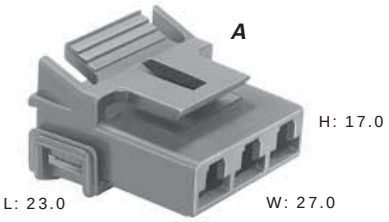

A. Part No: 12162512*

Description:	Connector 3F
Size:	23.0L x 17.0H x 27.0W
Color:	Black
Material:	PA66 HS IM
Terminals:	See Page 2.42
Typical App:	Switch

*Hinged secondary lock

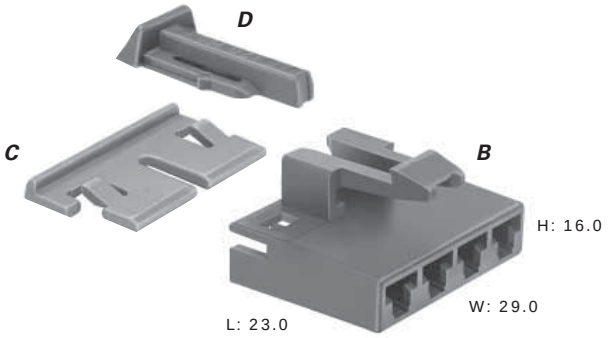

B. Part No: 12066571

Description:	Connector 4F
Size:	23.0L x 16.0H x 29.0W
Color:	Black
Material:	PA66 HS IM
Terminals:	See Page 2.42
Typical App:	Various

C. Part No: 12066572

Description:	TPA
Color:	Md. Gray
Material:	PA66 HS IM

D. Part No: 12052834

Description:	CPA
Color:	Green
Material:	PP

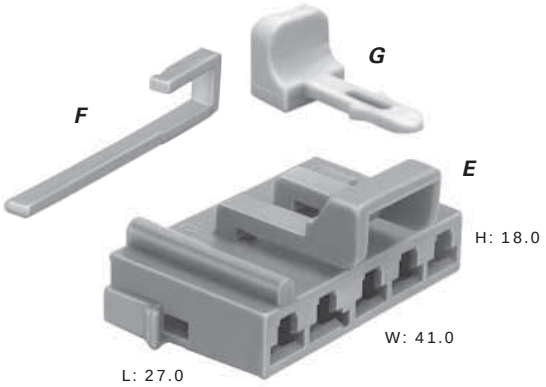

E. Part No: 12059296

Description:	Connector 5F
Size:	27.0L x 18.0H x 41.0W
Color:	Red
Material:	PA6
Terminals:	See Page 2.42
Typical App:	Switch

F. Part No: 12059297

Description:	Secondary Lock
Color:	Natural
Material:	PBT

G. Part No: 12020833

Description:	CPA
Color:	Gray
Material:	PBT

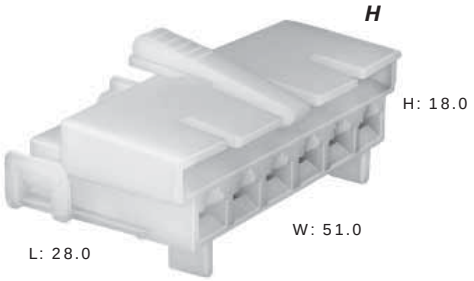

H. Part No: 12034061*

Description:	Connector 6F
Size:	28.0L x 18.0H x 51.0W
Color:	Cream
Material:	PA66 HS IM
Terminals:	See Page 2.42
Typical App:	Switch

*Hinged secondary lock

NOTE: Specifications in this catalog are for general reference only and are subject to change without notice. To verify product information, please contact a Delphi representative.

Peters de Laet
503-661-5088 – phone 503-661-5328 – fax
www.pdel.com

480 Device Connections

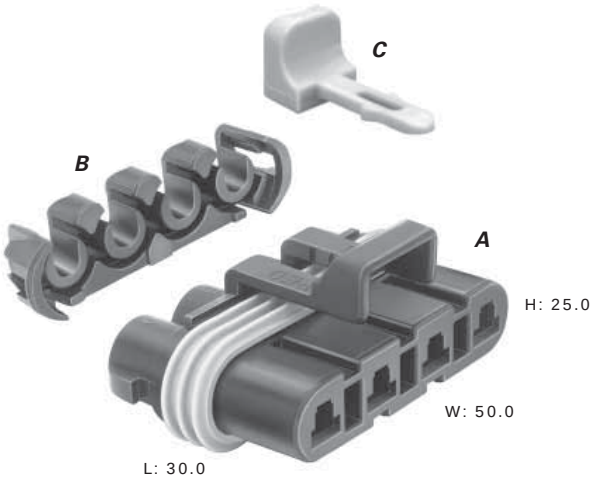

A. Part No: 12048412

Description:	Connector Assembly 4F
Size:	30.0L x 25.0H x 50.0W
Color:	Black
Material:	PA66 HS IM
Terminals:	See Page 2.46
Seals/Plugs:	See Page 2.46, 2.47
Typical App:	Resistor Pack

B. Part No: 12048413

Description:	TPA
Color:	Black
Material:	PA66 HS IM

C. Part No: 12020833

Description:	CPA
Color:	Gray
Material:	PBT

NOTE: Specifications in this catalog are for general reference only and are subject to change without notice. To verify product information, please contact a Delphi representative.

Peters de Laet
503-661-5088 – phone 503-661-5328 – fax
www.pdel.com

630

Available in device and in-line connections for vehicle applications, Metri-Pack 630 Series connectors can meet or exceed the requirements for most marine, appliance, and industrial control applications.

Ideally suited for high current applications that do not require environmental protection, Metri-Pack 630 Series products are extremely rugged and versatile.

Available in device and in-line connections for underhood vehicle applications, Metri-Pack 630 Series sealed connectors can meet or exceed the requirements for most marine, appliance, and industrial control applications.

Utilizing triple-rib peripheral silicone rubber seals, Metri-Pack 630 Series sealed systems are ideally suited for high current applications that require protection from environmental hazards.

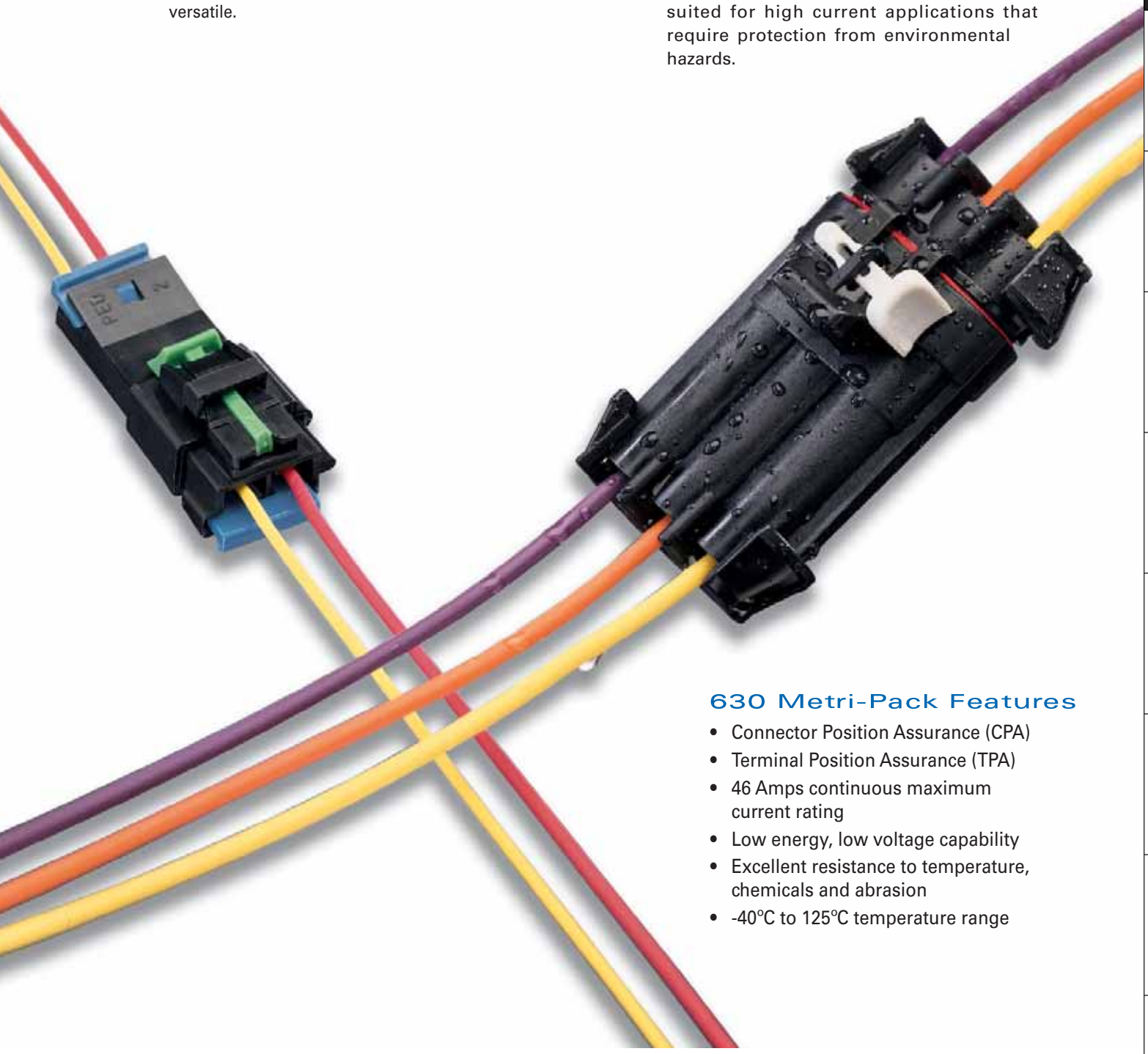

630 Metri-Pack Features

- Connector Position Assurance (CPA)
- Terminal Position Assurance (TPA)
- 46 Amps continuous maximum current rating
- Low energy, low voltage capability
- Excellent resistance to temperature, chemicals and abrasion
- -40°C to 125°C temperature range

Peters de Laet
503-661-5088 – phone 503-661-5328 – fax
www.pdel.com

630

Cross Sectional View

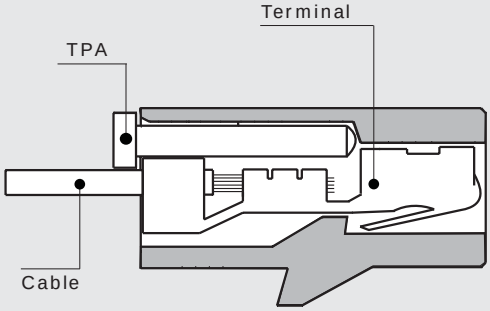

Female Connector

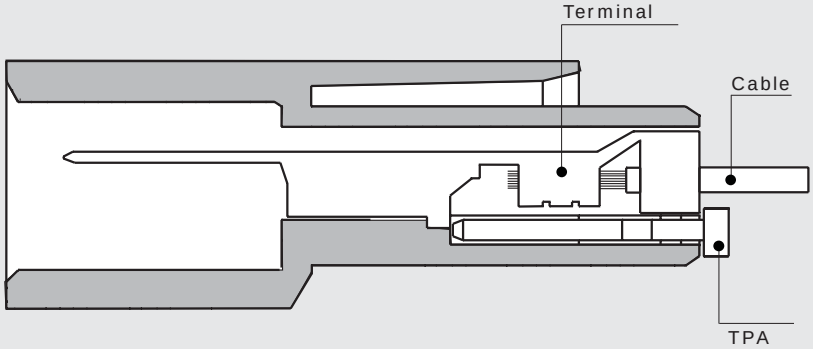

Male Connector

TPA
(Terminal Position
Assurance)

Female Terminal

CPA
(Connector Position
Assurance)

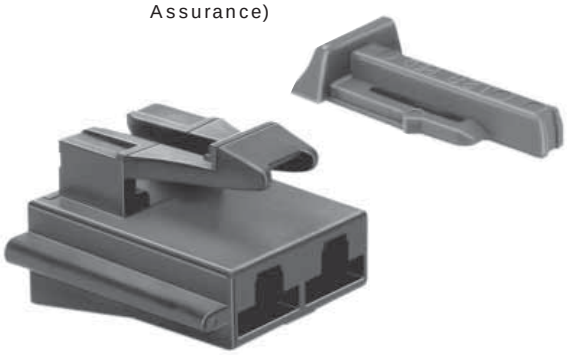

Female Connector

630 Female Terminals Unsealed

Part #	Cable Range (mm²)	Material	Plating
12084590	5.0-3.0	Tin Brass	Tin
12052224	3.0	Tin Brass	Tin
12084596	5.0-3.0 (2 Req'd.)	Tin Brass	Tin
12015870	2.0-1.0	Tin Brass	Tin
12015869	0.80-0.50	Tin Brass	Tin
12020035	0.80-0.50 (2 Req'd.)	Tin Brass	Tin
12052222	0.50-0.35	Tin Brass	Tin

630 Female Connectors Unsealed

# Cavities	Connector	Color	Material	TPA
2	12129939	Black	PA66 HS IM	12129940
4	12015664	Black	PA66 HS IM	–

NOTE: Specifications in this catalog are for general reference only and are subject to change without notice. To verify product information, please contact a Delphi representative.

Peters de Laet
503-661-5088 – phone 503-661-5328 – fax
www.pdel.com

630

Unsealed System Application Information

630 Series Terminals – Tin Plated

CABLE RANGE (mm²): 0.35-5.0

CURRENT RANGE (AMPS): 0-46

TEMP RANGE °C: ..... -40 to 125

RESISTANCE: ..... <10mΩ@20mV

VOLTAGE DROP: ..... <3.0mV/amp

CENTERLINE SPACING (mm): 8.5

BLADE WIDTH (mm): 6.3

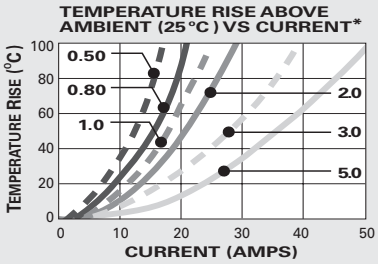

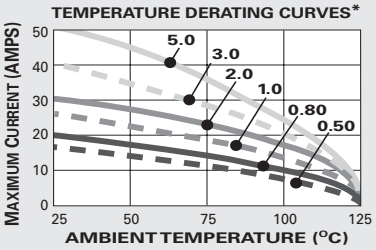

*The test data are based on single circuits in free space and were generated using a "Lumped Resistance" model. This model does not account for all of the variables that would be present in an actual application. For actual product performance, contact your regional support representative.

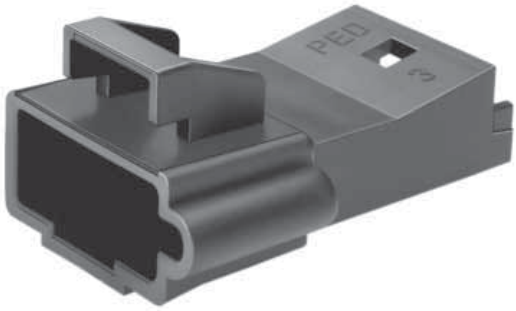

Male Connector

Male Terminal

TPA
(Terminal Position Assurance)

630 Male Connectors Unsealed

# Cavities	Connector	Color	Material	TPA
2	12129938	Black	PA66 HS IM	12129940
4	12052623	Black	PA66 HS IM	–

630 Male Terminals Unsealed

Part #	Cable Range (mm²)	Material	Plating
12066493	5.0-3.0	Tin Brass	Tin over Copper
12052826	3.0	Tin Brass	Tin over Copper
12020365	3.0 (2 Req'd.)	Tin Brass	Tin over Copper
12020126	2.0-1.0	Tin Brass	Tin over Copper
12020125	0.80-0.50	Tin Brass	Tin over Copper
12033972	0.80-0.50 (2 Req'd.)	Tin Brass	Tin over Copper
12066454	0.50-0.35	Tin Brass	Tin over Copper

SECTION NOTES:

- Due to rigid to tolerances of connector cavities, it is critical to meet all crimp dimensions as specified.

NOTE: Specifications in this catalog are for general reference only and are subject to change without notice. To verify product information, please contact a Delphi representative.

630

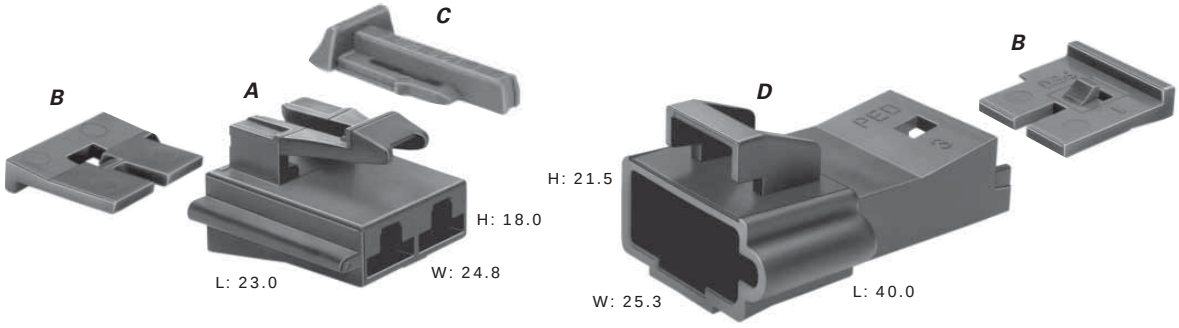

Total Mated Length: 53.0mm

A. Part No: 12129939

Description:	Connector 2F
Size:	23.0L x 18.0H x 24.8W
Color:	Black
Material:	PA66 HS IM
Terminals:	See Page 2.52

B. Part No: 12129940

Description:	TPA
Number Req:	2
Color:	Blue
Material:	PA66 HS IM

C. Part No: 12052834

Description:	CPA
Color:	Green
Material:	PP

D. Part No: 12129938

Description:	Connector 2M (Clip Slot-Self Locking)
Size:	40.0L x 21.5H x 25.3W
Color:	Black
Material:	PA66 HS IM
Terminals:	See Page 2.53

NOTE: Specifications in this catalog are for general reference only and are subject to change without notice. To verify product information, please contact a Delphi representative.

Peters de Laet
503-661-5088 – phone 503-661-5328 – fax
www.pdel.com

630

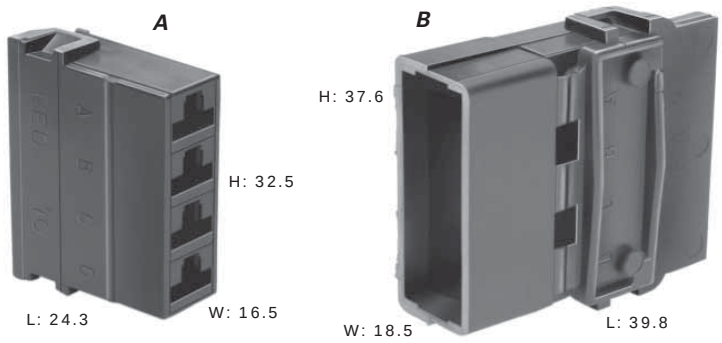

Total Mated Length: 53.1mm

A. Part No: 12015664*

Description:	Connector 4F
Size:	24.3L x 32.5H x 16.5W
Color:	Black
Material:	PA66 HS IM
Terminals:	See Page 2.52

*Hinged secondary lock.

B. Part No: 12052623*

Description:	Connector 4M
Size:	39.8L x 37.6H x 18.5W
Color:	Black
Material:	PA66 HS IM
Terminals:	See Page 2.53

*Hinged secondary lock.

NOTE: Specifications in this catalog are for general reference only and are subject to change without notice. To verify product information, please contact a Delphi representative.

Peters de Laet
503-661-5088 – phone 503-661-5328 – fax
www.pdel.com

630

Cross Sectional View

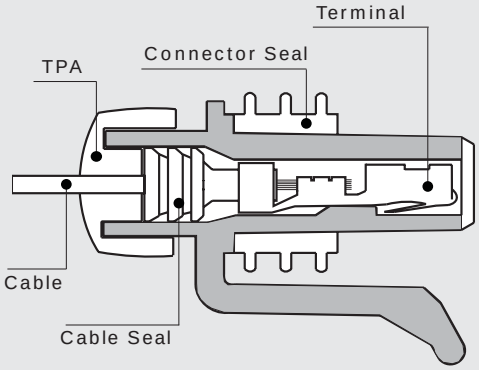

Female Connector Assembly

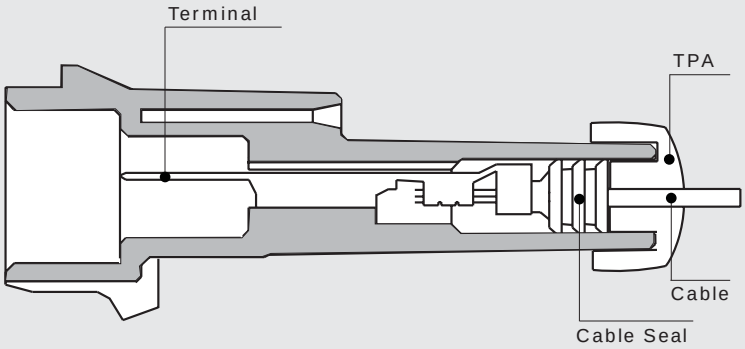

Male Connector

630 Female Terminals Sealed

Part #	Cable Range (mm²)	Material	Plating
12052456	5.0-3.0	Tin Brass	Tin
12052455	2.0-1.0	Tin Brass	Tin
12052457	0.80-0.50	Tin Brass	Tin

630 Female Pull-to-Seat Terminals

Part #	Cable Range (mm²)	Material	Plating
12033997	3.0	Tin Brass	Tin
12066614	2.0-1.0	Tin Brass	Tin
12020156	0.80-0.50	Tin Brass	Tin

630 Metri-Pack Cable Seals

Reel Part #	Loose Part #	Cable Dia.	Material	Color
12059257	15324993	5.15-4.40	Silicone	Green
12059260	15324996	4.50-3.61	Silicone	Blue
12059258	15324994	3.75-2.81	Silicone	Lt. Gray
12059259	15324995	2.85-2.01	Silicone	Dk. Red
12077760	15324997	2.40-1.65	Silicone	Tan

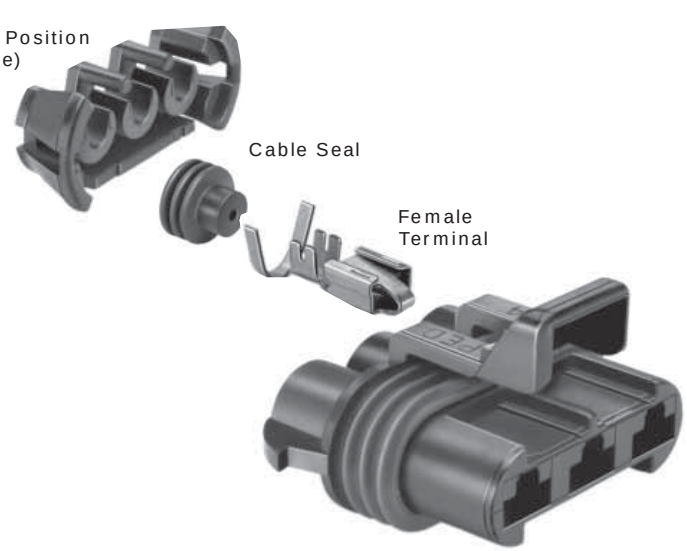

Female Connector Assembly

630 Female Connector Assembly Sealed

# Cavities	Conn. Asm.	Color	Material	TPA
3	12124685	Black	PBT 30% GF	12045699

NOTE: Specifications in this catalog are for general reference only and are subject to change without notice. To verify product information, please contact a Delphi representative.

Peters de Laet
503-661-5088 – phone 503-661-5328 – fax
www.pdel.com

630

Sealed System Application Information

CABLE RANGE (mm²): 0.50-5.0

CURRENT RANGE (AMPS): 0-46

TEMP RANGE °C: ..... -40 to 125

RESISTANCE: ..... <10mΩ@20mV

VOLTAGE DROP: ..... <3.0mV/amp

CENTERLINE SPACING (mm): 10.8

BLADE WIDTH (mm): 6.3

630 Series Terminals – Tin Plated

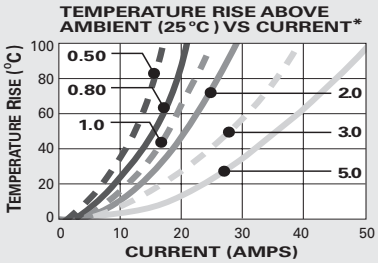

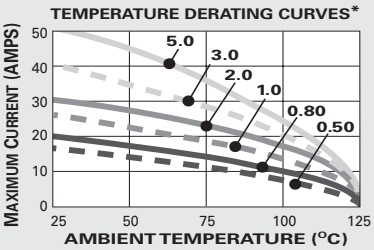

*The test data are based on single circuits in free space and were generated using a "Lumped Resistance" model. This model does not account for all of the variables that would be present in an actual application. For actual product performance, contact your regional support representative.

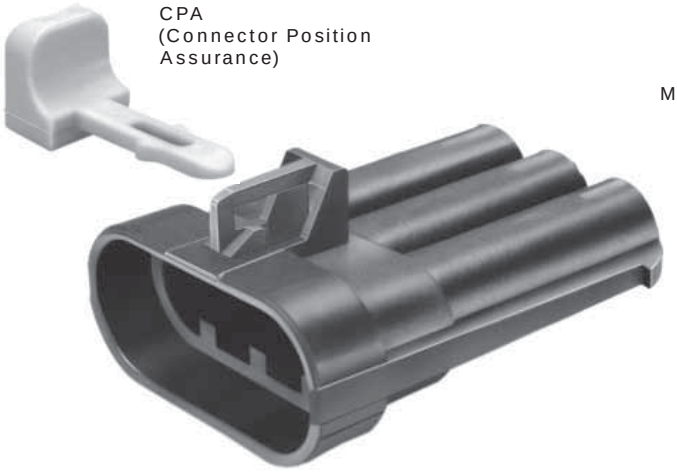

Male Connector

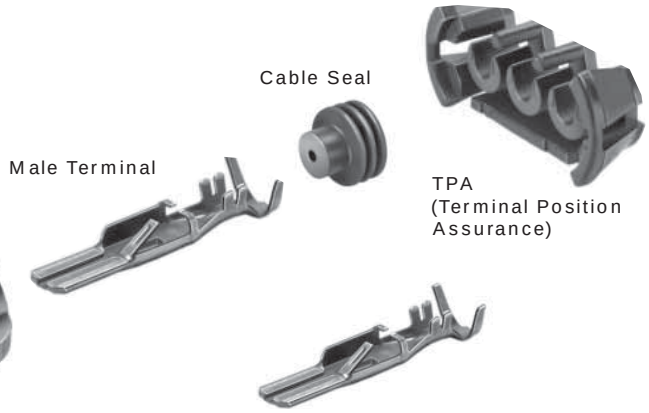

630 Male Terminals Sealed

Part #	Cable Range (mm²)	Material	Plating
12064736	5.0	Tin Brass	Tin
12064737	3.0	Tin Brass	Tin
12064735	2.0-1.0	Tin Brass	Tin
12064734	0.80-0.50	Tin Brass	Tin

630 Male Connector Sealed

# Cavities	Connector	Color	Material	TPA
3	15358681	Black	PBT 30% GF	12045699

630 Metri-Pack Cavity Plug*

Part #	Cavity Inside Diameter	Material	Color
12059255	9.8mm	Silicone	Green

*Cavity plugs seal unused female and male cavities.

SECTION NOTES:

- Due to rigid tolerances of connector cavities, it is critical to meet all crimp dimensions as specified.

NOTE: Specifications in this catalog are for general reference only and are subject to change without notice. To verify product information, please contact a Delphi representative.

Peters de Laet
503-661-5088 – phone 503-661-5328 – fax
www.pdel.com

630

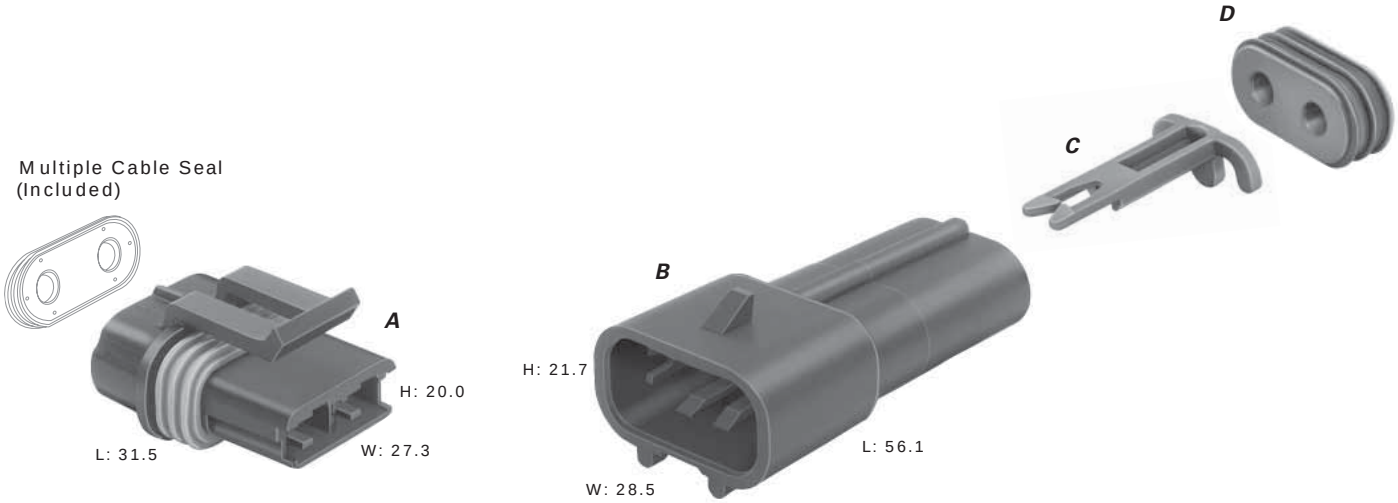

Total Mated Length: 67.5mm

A. Part No: 12033769

Description:	Connector Assembly 2F
Size:	31.5L x 20.0H x 27.3W
Color:	Black
Material:	PA66 HS IM
Terminals:	See Page 2.56, Pull-To-Seat Terminals

B. Part No: 12034269

Description:	Connector 2M
Size:	56.1L x 21.7H x 28.5W
Color:	Black
Material:	PA66 HS IM
Terminals:	See Page 2.57

C. Part No: 12034363

Description:	TPA
Color:	Md. Gray
Material:	PA66 HS IM

D. Part No: 12034364

Description:	Seal
Color:	Gray
Material:	Silicone

NOTE: Specifications in this catalog are for general reference only and are subject to change without notice. To verify product information, please contact a Delphi representative.

Peters de Laet
503-661-5088 – phone 503-661-5328 – fax
www.pdel.com

630

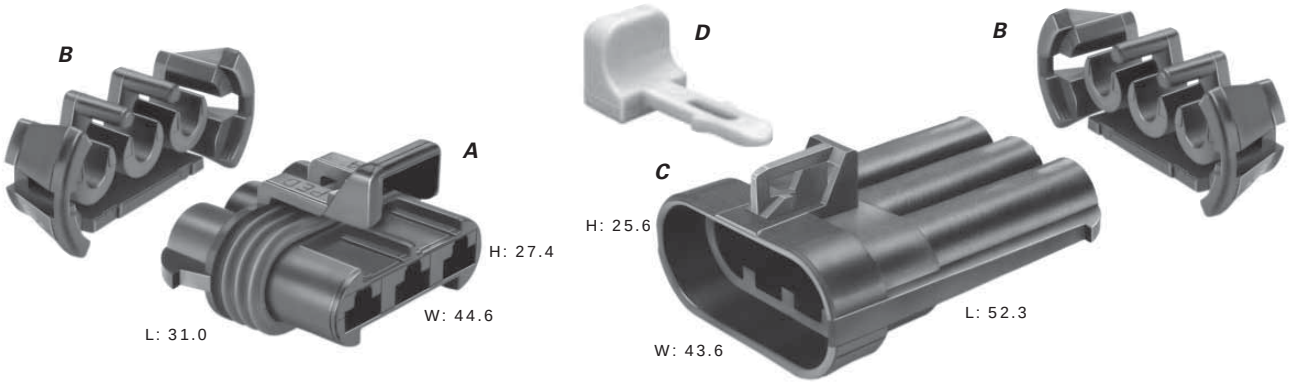

Total Mated Length: 69.5mm

A. Part No: 12124685

Description:	Connector Assembly 3F
Size:	31.0L x 27.4H x 44.6W
Color:	Black
Material:	PBT 30% GF
Terminals:	See Page 2.56
Seals/Plugs:	See Page 2.56, 2.57

B. Part No: 12045699

Description:	TPA
Number Req:	2
Color:	Black
Material:	PA66 HS IM

C. Part No: 15358681

Description:	Connector 3M (Clip Slot)
Size:	52.3L x 25.6H x 43.6W
Color:	Black
Material:	PBT 30% GF
Terminals:	See Page 2.57
Seals/Plugs:	See Page 2.56, 2.57

D. Part No: 12020833

Description:	CPA
Color:	Gray
Material:	PBT

NOTE: Specifications in this catalog are for general reference only and are subject to change without notice. To verify product information, please contact a Delphi representative.

Peters de Laet
503-661-5088 – phone 503-661-5328 – fax
www.pdel.com

Peters de Laet
503-661-5088 – phone 503-661-5328 – fax
www.pdel.com

800

Available in device and in-line connections for vehicle applications, Metri-Pack 800 Series connectors can meet or exceed the requirements for most marine, appliance, and industrial control applications.

Ideally suited for high current applications that do not require environmental protection, Metri-Pack 800 Series products are extremely rugged and versatile.

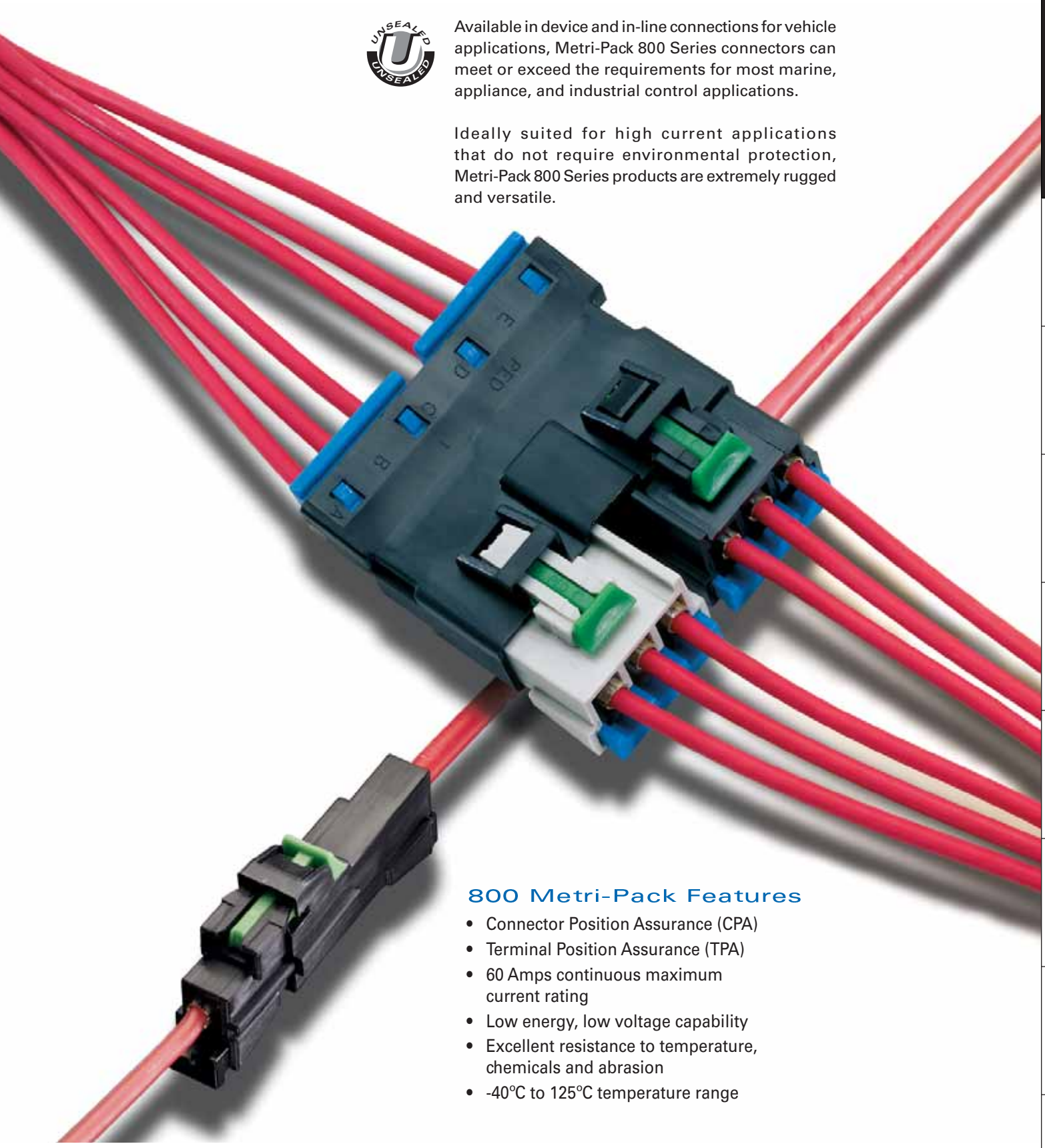

800 Metri-Pack Features

- Connector Position Assurance (CPA)
- Terminal Position Assurance (TPA)
- 60 Amps continuous maximum current rating
- Low energy, low voltage capability
- Excellent resistance to temperature, chemicals and abrasion
- -40°C to 125°C temperature range

Peters de Laet
503-661-5088 – phone 503-661-5328 – fax
www.pdel.com

800 MAXI™ Fuse

Cross Sectional View

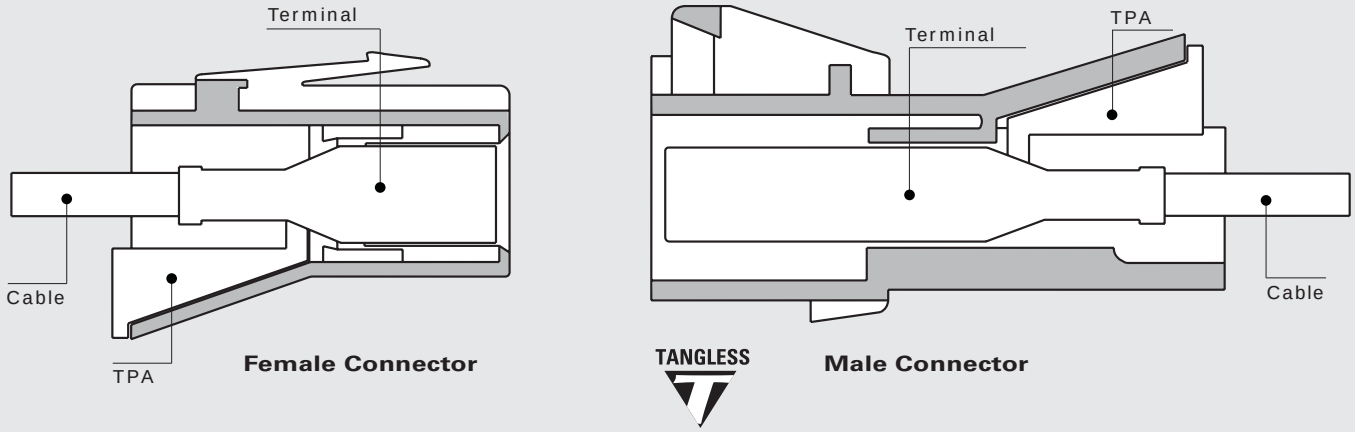

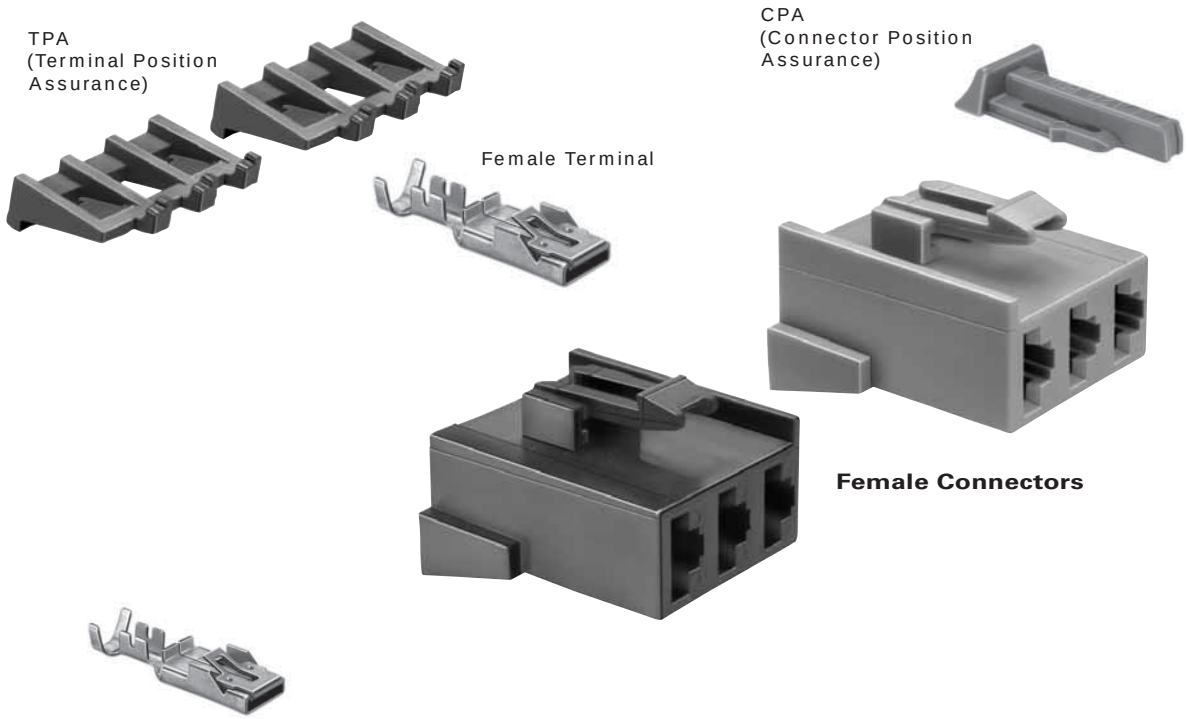

800 Female Terminals Unsealed			
Part #	**Cable Range (mm²)**	**Material**	**Plating**
12110127	5.0	Tin Brass	Silver/Nickel
12092445	5.0 (2 Req'd.)	Tin Brass	Silver/Nickel
12092444	3.0 (2 Req'd.)	Tin Brass	Silver/Nickel
12065916	3.0-2.0	Tin Brass	Silver/Nickel

800 Female Connectors Unsealed				
# Cavities	**Connector**	**Color**	**Material**	**TPA**
1way: 1	12160893	Black	PA6	12160895
6way: 3	12092399	Lt. Gray	PA66 HS IM	12092401
6way: 3	12092400	Black	PA66 HS IM	12092401

NOTE: Specifications in this catalog are for general reference only and are subject to change without notice. To verify product information, please contact a Delphi representative.

Peters de Laet
503-661-5088 – phone 503-661-5328 – fax
www.pdel.com

800 MAXI™ Fuse

Unsealed System Application Information

CABLE RANGE (mm²): 2.0-5.0

CURRENT RANGE (AMPS): 0-60

TEMP RANGE °C: ..... -40 to 125

RESISTANCE: ..... <10mΩ@20mV

VOLTAGE DROP: ..... <3.0mV/amp

CENTERLINE SPACING (mm): 10.3

BLADE WIDTH (mm): 8.0

800 Series Terminals – Tin Plated

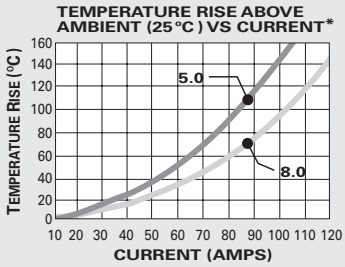

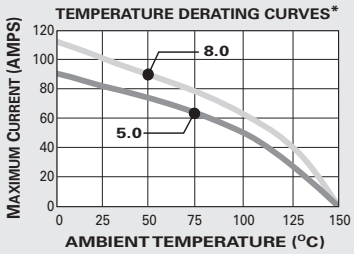

*The test data are based on single circuits in free space and were generated using a "Lumped Resistance" model. This model does not account for all of the variables that would be present in an actual application. For actual product performance, contact your regional support representative.

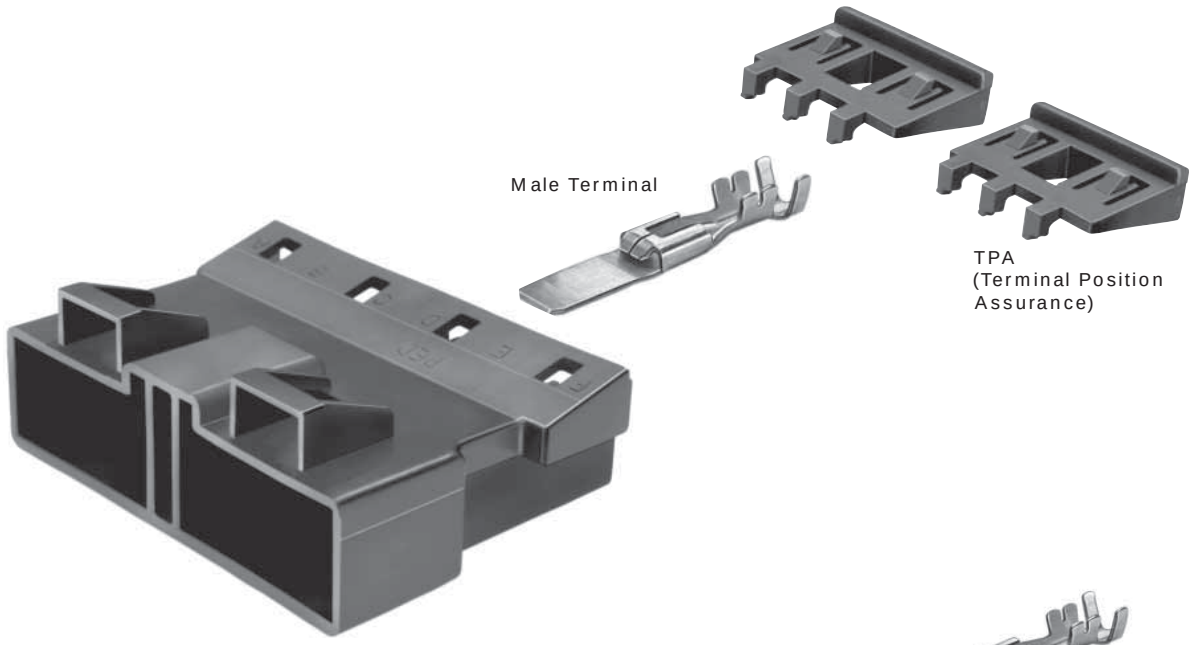

Male Connector

TANGLESS

800 Male Connectors Unsealed				
# Cavities	**Connector**	**Color**	**Material**	**TPA**
1	12160894	Black	PA6	12160895
6	12110698	Black	PA66 HS IM	12092401

TANGLESS

800 Male Tangless Terminals Unsealed			
Part #	**Cable Range (mm²)**	**Material**	**Plating**
12110700	5.0	Tin Brass	Silver/Nickel

SECTION NOTES:

- Due to rigid tolerances of connector cavities, it is critical to meet all crimp dimensions as specified.

NOTE: Specifications in this catalog are for general reference only and are subject to change without notice. To verify product information, please contact a Delphi representative.

800 MAXI™ Fuse

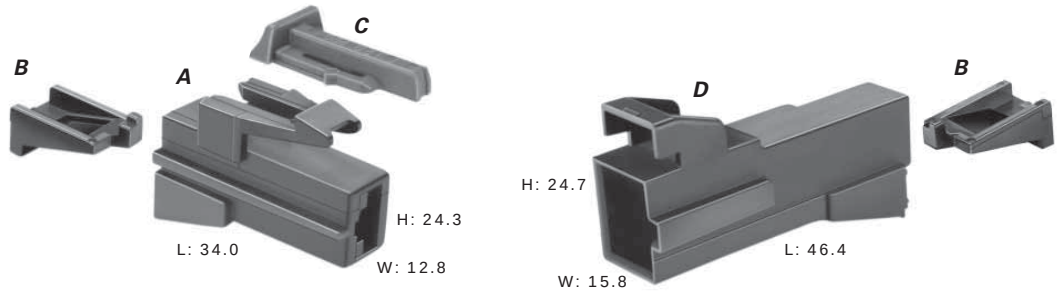

TANGLESS

Total Mated Length: 65.7mm

A. Part No: 12160893

Description:	Connector 1F
Size:	34.0L x 24.3H x 12.8W
Color:	Black
Material:	PA6
Terminals:	See Page 2.62

B. Part No: 12160895

Description:	TPA
Number Req:	2
Color:	Md. Gray
Material:	PA6

C. Part No: 12052834

Description:	CPA
Color:	Green
Material:	PP

D. Part No: 12160894

Description:	Connector 1M (Clip Slot–Self Locking)
Size:	46.4L x 24.7H x 15.8W
Color:	Black
Material:	PA6
Terminals:	See Page 2.63

NOTE: Specifications in this catalog are for general reference only and are subject to change without notice. To verify product information, please contact a Delphi representative.

Peters de Laet
503-661-5088 – phone 503-661-5328 – fax
www.pdel.com

800 MAXI™ Fuse

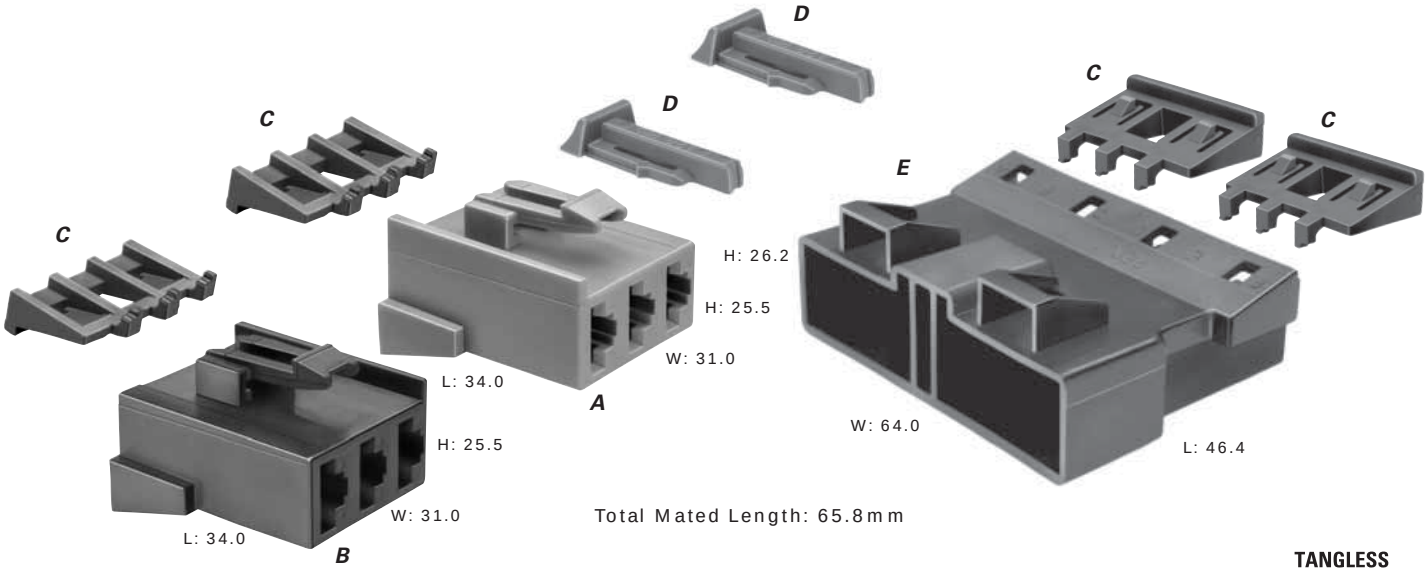

TANGLESS

A. Part No: 12092399

Description:	Connector 3F
Size:	34.0L x 25.5H x 31.0W
Color:	Lt. Gray
Material:	PA66 HS IM
Terminals:	See Page 2.62

B. Part No: 12092400

Description:	Connector 3F
Size:	34.0L x 25.5H x 31.0W
Color:	Black
Material:	PA66 HS IM
Terminals:	See Page 2.62

C. Part No: 12092401

Description:	TPA
Number Req:	4
Color:	Blue
Material:	PA66 HS IM

D. Part No: 12052834

Description:	CPA
Number Req:	2
Color:	Green
Material:	PP

E. Part No: 12110698

Description:	Connector 6M (Clip Slot–Self Locking)
Size:	46.4L x 26.2H x 64.0W
Color:	Black
Material:	PA66 HS IM
Terminals:	See Page 2.63

NOTE: Specifications in this catalog are for general reference only and are subject to change without notice. To verify product information, please contact a Delphi representative.

Peters de Laet
503-661-5088 – phone 503-661-5328 – fax
www.pdel.com

Peters de Laet
503-661-5088 – phone 503-661-5328 – fax
www.pdel.com

Mixed

Available in device and in-line connections for vehicle applications, Metri-Pack Mixed Series connectors can meet or exceed the requirements for most marine, appliance, and industrial control applications.

Ideally suited for combination low energy and high current applications that do not require environmental protection, Metri-Pack Mixed Series products are extremely versatile.

Available in device and in-line connections for underhood vehicle applications, Metri-Pack Mixed Series sealed connectors can meet or exceed the requirements for most marine, appliance, and industrial control applications.

Utilizing triple-rib peripheral silicone rubber seals, Metri-Pack Mixed Series sealed systems are ideally suited for combination, low-energy electronic, and high current applications that require protection from environmental hazards.

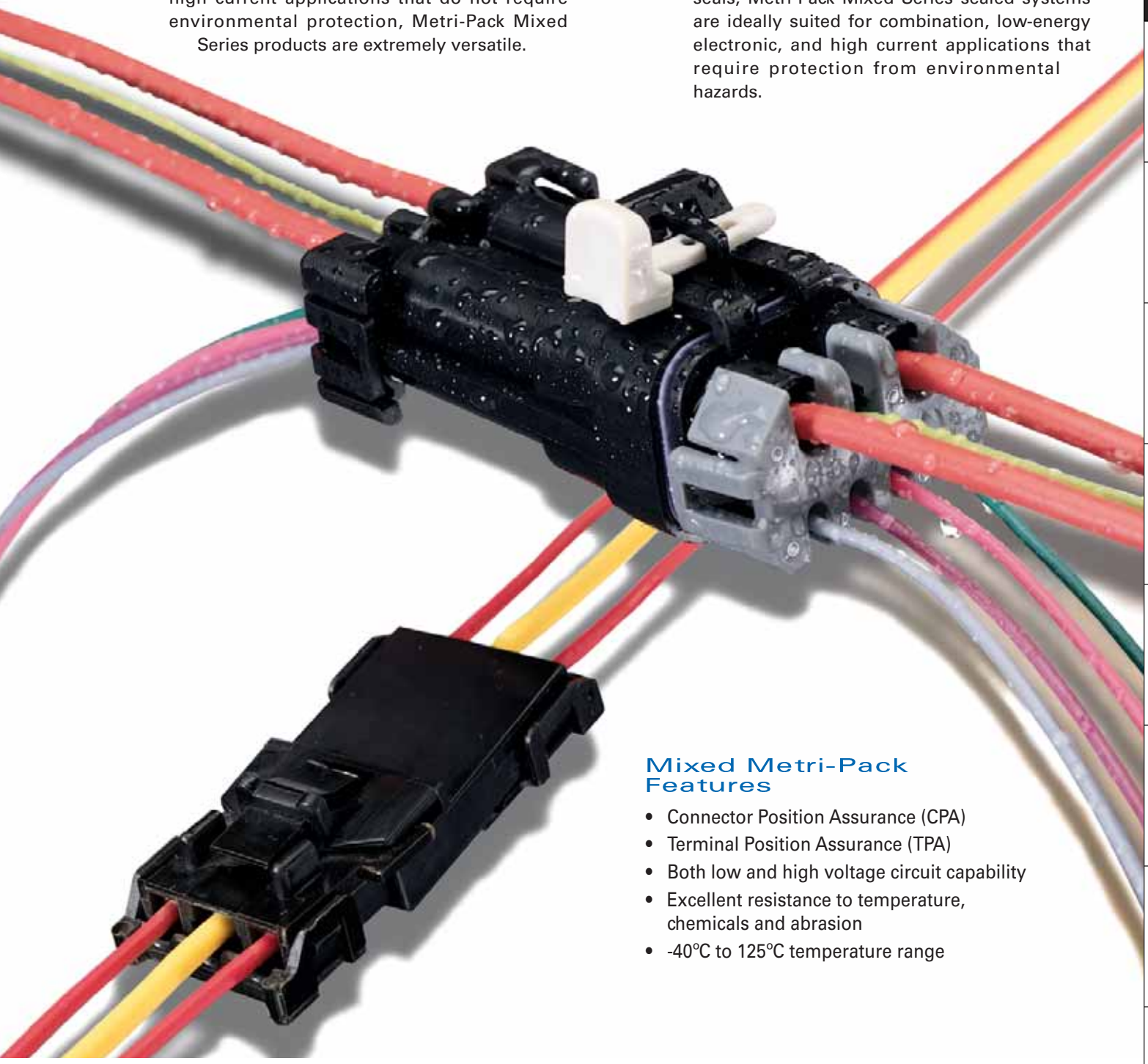

Mixed Metri-Pack Features

- Connector Position Assurance (CPA)
- Terminal Position Assurance (TPA)
- Both low and high voltage circuit capability
- Excellent resistance to temperature, chemicals and abrasion
- -40°C to 125°C temperature range

Peters de Laet
503-661-5088 – phone 503-661-5328 – fax
www.pdel.com

Mixed

Unsealed System Application Information

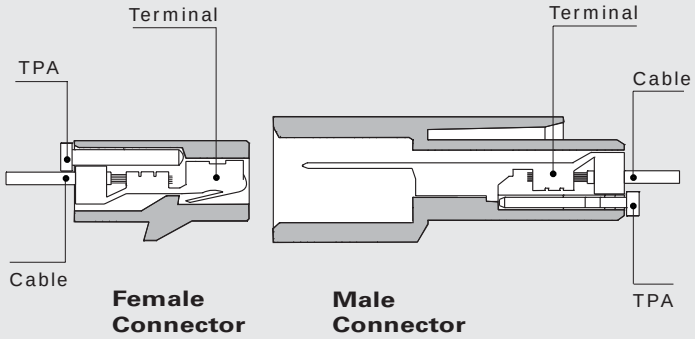

280 Series Terminals – Tin Plated

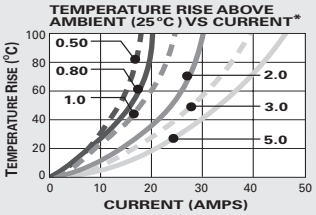

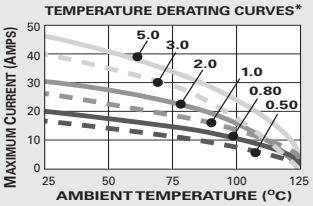

CABLE RANGE (mm²): 0.35-5.0
CURRENT RANGE (AMPS): 0-30
TEMP RANGE °C: ..... -40 to 125
RESISTANCE: ..... <10mΩ@20mV

VOLTAGE DROP: ..... <3.0mV/amp
CENTERLINE SPACING (mm): .....
..... Connector Dependent
BLADE WIDTH (mm): 2.8

*The test data are based on single circuits in free space and were generated using a "Lumped Resistance" model. This model does not account for all of the variables that would be present in an actual application. For actual product performance, contact your regional support representative.

280 Female Terminals Unsealed

Part #	Cable Range (mm²)	Material	Plating
12015858	5.0-3.0	Tin Brass	Tin
12129494	3.0-2.0	Tin Brass	Tin
12066214	2.0-1.0	Tin Brass	Tin
12034046	0.80-0.50	Tin Brass	Tin
12052217	0.50-0.35	Tin Brass	Tin
12162597*	3.0-2.0	Tin Brass	Tin
12162595*	1.0-0.80	Tin Brass	Tin
12162596*	0.50-0.35	Tin Brass	Tin

*Thin Stock—Electrical current restrictions may apply.

480 Female Terminals Unsealed

Part #	Cable Range (mm²)	Material	Plating
12084595	5.0-3.0	Tin Brass	Tin
12052221	3.0	Tin Brass	Tin
12124304	2.0-1.0	Tin Brass	Tin
12015860	0.80-0.50	Tin Brass	Tin
12052219	0.50-0.35	Tin Brass	Tin
12020366	2.0-1.0 (1 Req'd.)	Tin Brass	Tin
	0.80-0.50 (1 Req'd.)		

630 Female Terminals Unsealed

Part #	Cable Range (mm²)	Material	Plating
12084590	5.0-3.0	Tin Brass	Tin
12052224	3.0	Tin Brass	Tin
12084596	5.0-3.0 (2 Req'd.)	Tin Brass	Tin
12015870	2.0-1.0	Tin Brass	Tin
12015869	0.80-0.50	Tin Brass	Tin
12020035	0.80-0.50 (2 Req'd.)	Tin Brass	Tin
12052222	0.50-0.35	Tin Brass	Tin

Female Terminals

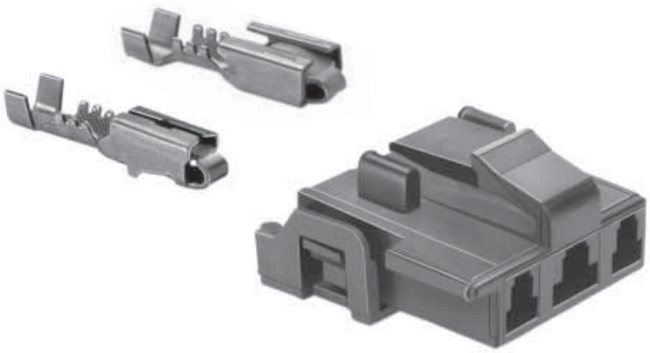

Female Connector

Mixed Metri-Pack Female Connector Unsealed

# Cavities	Connector	Color	Material
3	12020014	Black	PA66 HS IM

NOTE: Specifications in this catalog are for general reference only and are subject to change without notice. To verify product information, please contact a Delphi representative.

Peters de Laet
503-661-5088 – phone 503-661-5328 – fax
www.pdel.com

Mixed

Unsealed System Application Information

480 Series Terminals – Tin Plated

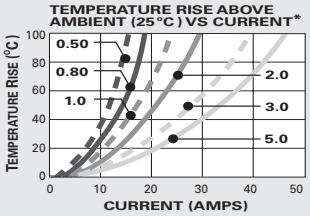

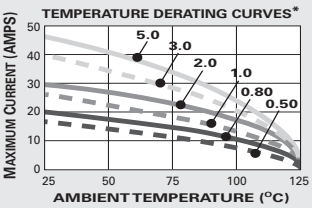

CABLE RANGE (mm²): 0.35-5.0
CURRENT RANGE (AMPS): 0-42
TEMP RANGE °C: ..... -40 to 125
RESISTANCE: ..... <10mΩ@20mV

VOLTAGE DROP: ..... <3.0mV/amp
CENTERLINE SPACING (mm): .....
..... Connector Dependent
BLADE WIDTH (mm): 4.8

630 Series Terminals – Tin Plated

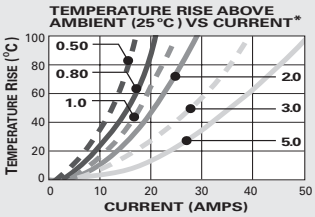

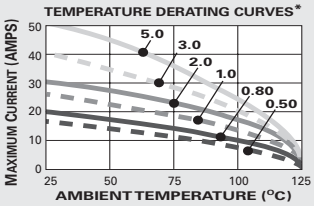

CABLE RANGE (mm²): 0.35-5.0
CURRENT RANGE (AMPS): 0-46
TEMP RANGE °C: ..... -40 to 125
RESISTANCE: ..... <10mΩ@20mV

VOLTAGE DROP: ..... <3.0mV/amp
CENTERLINE SPACING (mm): .....
..... Connector Dependent
BLADE WIDTH (mm): 6.3

*The test data are based on single circuits in free space and were generated using a "Lumped Resistance" model. This model does not account for all of the variables that would be present in an actual application. For actual product performance, contact your regional support representative.

Male Terminals

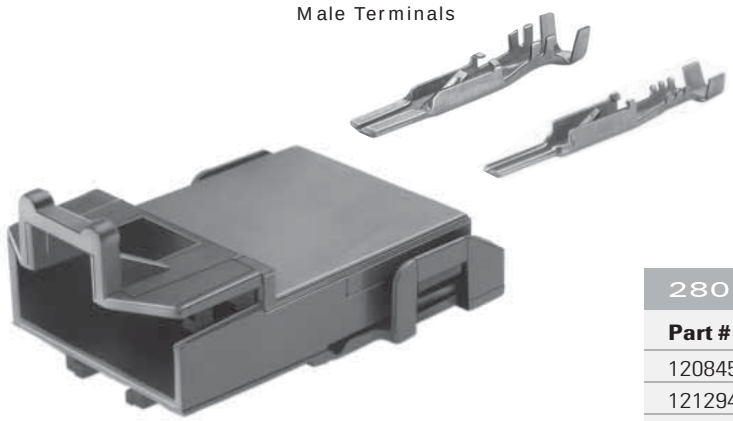

Male Connector

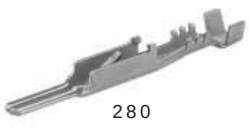

280

480

280 Male Terminals Unsealed

Part #	Cable Range (mm²)	Material	Plating
12084586	5.0-3.0	Tin Brass	Tin
12129498	3.0-2.0	Tin Brass	Tin
12020116	2.0-1.0	Tin Brass	Tin
12034047	0.80-0.50	Tin Brass	Tin
12066271	0.50-0.35	Tin Brass	Tin
12020782	0.35 (2 Req'd.)	Tin Brass	Tin

480 Male Terminals Unsealed

Part #	Cable Range (mm²)	Material	Plating
12033820	5.0-3.0	Tin Brass	Tin over Copper
12052827	3.0	Tin Brass	Tin over Copper
12020120	2.0-1.0	Tin Brass	Tin over Copper
12020119	0.80-0.50	Tin Brass	Tin over Copper
12066269	0.50-0.35	Tin Brass	Tin over Copper
12020784	0.35 (2 Req'd.)	Tin Brass	Tin over Copper

Mixed Metri-Pack Male Connector Unsealed

# Cavities	Connector	Color	Material
3	12045681	Black	PA66 HS IM

SECTION NOTES:

- Due to rigid tolerances of connector cavities, it is critical to meet all crimp dimensions as specified.
- Female connections for device applications, see page 2.76.

NOTE: Specifications in this catalog are for general reference only and are subject to change without notice. To verify product information, please contact a Delphi representative.

Peters de Laet
503-661-5088 – phone 503-661-5328 – fax
www.pdel.com

Mixed

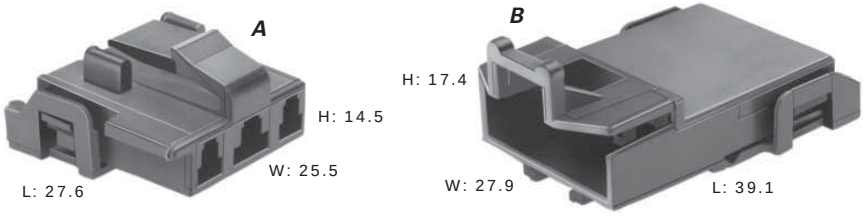

Total Mated Length: 55.6mm

A. Part No: 12020014*

Description:	Connector 3F
Size:	27.6L x 14.5H x 25.5W
Color:	Black
Material:	PA66 HS IM
Terminals:	See Page 2.68

*Hinged secondary lock.

B. Part No: 12045681*

Description:	Connector 3M (Clip Slot)
Size:	39.1L x 17.4H x 27.9W
Color:	Black
Material:	PA66 HS IM
Terminals:	See Page 2.69

*Hinged secondary lock.

KEY:

- ■ 280 SERIES
- ● 480 SERIES

Mixed connectors feature a combination of different terminal cavities, as indicated by the key.

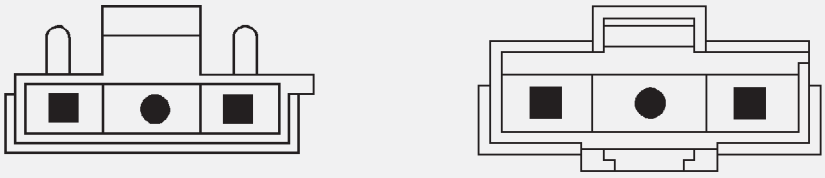

NOTE: Specifications in this catalog are for general reference only and are subject to change without notice. To verify product information, please contact a Delphi representative.

Peters de Laet
503-661-5088 – phone 503-661-5328 – fax
www.pdel.com

Peters de Laet
503-661-5088 – phone 503-661-5328 – fax
www.pdel.com

Mixed

Sealed System Application Information

150 Series Terminals – Tin Plated

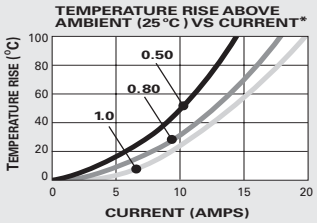

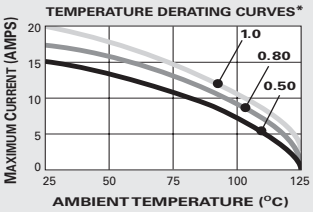

CABLE RANGE (mm²): 0.35-1.0
CURRENT RANGE (AMPS): 0-14
TEMP RANGE °C: ..... -40 to 125
RESISTANCE: ..... <10mΩ@20mV

VOLTAGE DROP: ... <10.0mV/amp
CENTERLINE SPACING (mm): .....
..... Connector Dependent
BLADE WIDTH (mm): 1.5

280 Series Terminals – Tin Plated

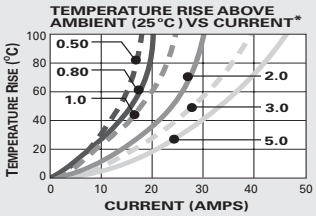

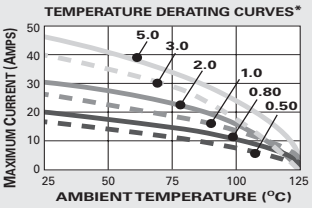

CABLE RANGE (mm²): 0.35-5.0
CURRENT RANGE (AMPS): 0-30
TEMP RANGE °C: ..... -40 to 125
RESISTANCE: ..... <10mΩ@20mV

VOLTAGE DROP: ..... <3.0mV/amp
CENTERLINE SPACING (mm): .....
..... Connector Dependent
BLADE WIDTH (mm): 2.8

*The test data are based on single circuits in free space and were generated using a "Lumped Resistance" model. This model does not account for all of the variables that would be present in an actual application. For actual product performance, contact your regional support representative.

150

280

480

630

150 Female Terminals Sealed

Part #	Cable Range (mm²)	Material	Plating
12048074	1.0-0.80-0.50	Silicon Bronze	Tin
12084200	0.50-0.35	Silicon Bronze	Tin
12160223	1.0-0.80	Beryllium Copper	Silver/Nickel
12160222	0.50-0.35	Beryllium Copper	Silver/Nickel

280 Female Terminals Sealed

Part #	Cable Range (mm²)	Material	Plating
12077413	3.0	Tin Brass	Tin
12129493	3.0-2.0	Tin Brass	Tin
12077411	1.0-0.80-0.50	Tin Brass	Tin
12084201	0.50-0.35	Tin Brass	Tin

480 Female Terminals Sealed

Part #	Cable Range (mm²)	Material	Plating
12052139	5.0-3.0	Tin Brass	Tin
12048451	2.0-1.0	Tin Brass	Tin
12048450	0.80-0.50	Tin Brass	Tin

630 Female Terminals Sealed

Part #	Cable Range (mm²)	Material	Plating
12052456	5.0-3.0	Tin Brass	Tin
12052455	2.0-1.0	Tin Brass	Tin
12052457	0.80-0.50	Tin Brass	Tin

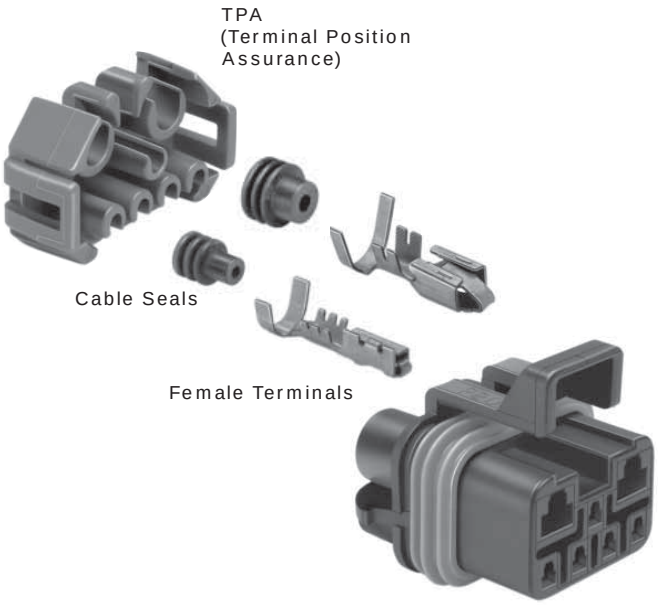

Female Connector Assembly

Mixed Metri-Pack Female Connector Assembly Sealed

# Cavities	Conn. Asm.	Color	Material	TPA
7	12059472	Black	PA66 HS IM	12052486

NOTE: Specifications in this catalog are for general reference only and are subject to change without notice. To verify product information, please contact a Delphi representative.

Peters de Laet
503-661-5088 – phone 503-661-5328 – fax
www.pdel.com

Mixed

Sealed System Application Information

480 Series Terminals – Tin Plated

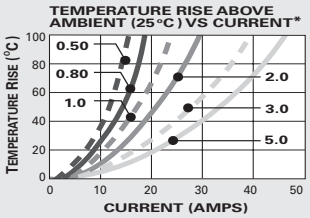

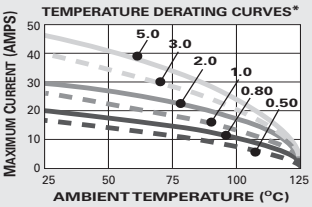

CABLE RANGE (mm²): 0.35-5.0
CURRENT RANGE (AMPS): 0-42
TEMP RANGE °C: ..... -40 to 125
RESISTANCE: ..... <10mΩ@20mV

VOLTAGE DROP: ..... <3.0mV/amp
CENTERLINE SPACING (mm): .....
..... Connector Dependent
BLADE WIDTH (mm): 4.8

630 Series Terminals – Tin Plated

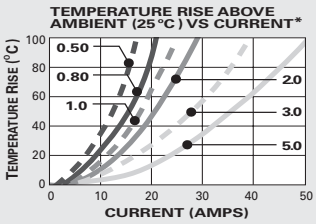

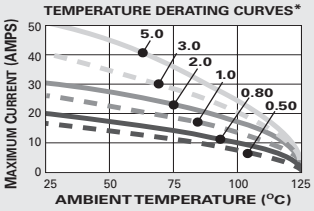

CABLE RANGE (mm²): 0.35-5.0
CURRENT RANGE (AMPS): 0-46
TEMP RANGE °C: ..... -40 to 125
RESISTANCE: ..... <10mΩ@20mV

VOLTAGE DROP: ..... <3.0mV/amp
CENTERLINE SPACING (mm): .....
..... Connector Dependent
BLADE WIDTH (mm): 6.3

*The test data are based on single circuits in free space and were generated using a "Lumped Resistance" model. This model does not account for all of the variables that would be present in an actual application. For actual product performance, contact your regional support representative.

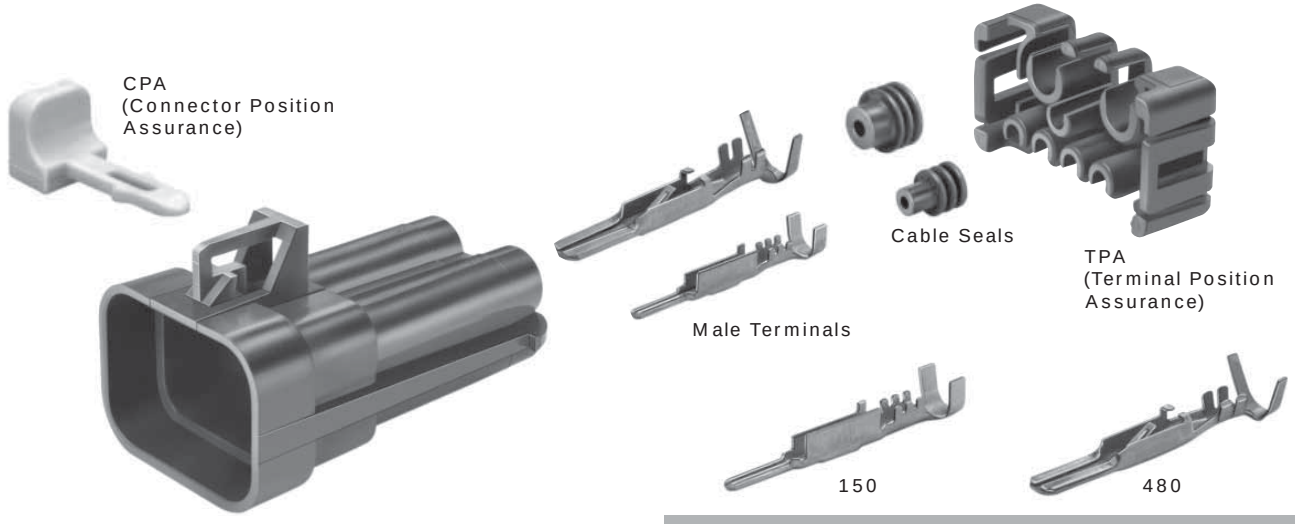

Male Connector

150 Male Terminals Sealed

Part #	Cable Range (mm²)	Material	Plating
12045773	0.80-0.50	Tin Brass	Tin
12077628	0.50-0.35	Tin Brass	Tin

480 Male Terminals Sealed

Part #	Cable Range (mm²)	Material	Plating
12052172	5.0	Tin Brass	Tin
12065197	3.0	Tin Brass	Tin
12065196	2.0-1.0	Tin Brass	Tin

Mixed Metri-Pack Male Connector Sealed

# Cavities	Connector	Color	Material	TPA
7	12052200	Black	PA66 HS IM	12052199

SECTION NOTES:

- Due to rigid tolerances of connector cavities, it is critical to meet all crimp dimensions as specified.
- Female connections for device applications, see pages 2.77 and 2.78.

NOTE: Specifications in this catalog are for general reference only and are subject to change without notice. To verify product information, please contact a Delphi representative.

Peters de Laet
503-661-5088 – phone 503-661-5328 – fax
www.pdel.com

Mixed

Cross Sectional View

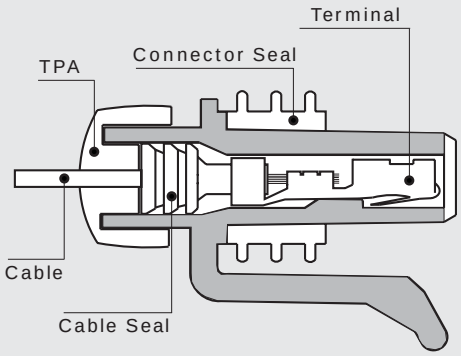

Female Connector Assembly

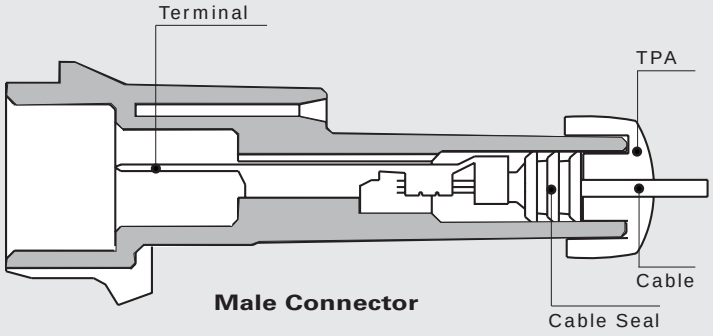

Male Connector

150 Metri-Pack Cable Seals

Reel Part#	Loose Part#	Cable Dia.	Material	Color
12052924	15324973	2.85-2.03	Silicone	Dk. Red
12089442	15324976	2.15-1.60	Silicone	White
12052925	15324974	1.70-1.29	Silicone	Blue
12124669	15324975	1.009-0.995	Silicone	Tan

280 Metri-Pack Cable Seals

Reel Part #	Loose Part #	Cable Dia.	Material	Color
12015360	15324981	4.30-3.45	Silicone	Blue
12015359	15324980	3.49-2.81	Silicone	Gray
12015284	15324982	2.85-2.03	Silicone	Green
12041352	15324984	2.42-2.03	Silicone	Tan
12089444	15324985	2.15-1.60	Silicone	Purple
12034365	15324983	1.70-1.29	Silicone	Dk. Red

480 Metri-Pack Cable Seals

Reel Part #	Loose Part #	Cable Dia.	Material	Color
12065703	15324987	5.16-4.40	Silicone	Orange
12052453	15324990	4.50-3.61	Silicone	Purple
12052452	15324989	3.76-2.81	Silicone	Red
12048433	15324988	2.85-2.01	Silicone	White
12052931	15324991	2.15-1.60	Silicone	Yellow
12162068	15324992	1.70-1.29	Silicone	Pink

630 Metri-Pack Cable Seals

Reel Part #	Loose Part #	Cable Dia.	Material	Color
12059257	15324993	5.15-4.40	Silicone	Green
12059260	15324996	4.50-3.61	Silicone	Blue
12059258	15324994	3.75-2.81	Silicone	Lt. Gray
12059259	15324995	2.85-2.01	Silicone	Dk. Red
12077760	15324997	2.40-1.65	Silicone	Tan

150 Metri-Pack Cavity Plug*

Part #	Cavity Inside Diameter	Material	Color
12059168	5.2mm	Silicone	Dk. Red

*Cavity plugs seal unused female and male cavities.

280 Metri-Pack Cavity Plug*

Part #	Cavity Inside Diameter	Material	Color
12010300	6.7mm	Silicone	Green

*Cavity plugs seal unused female and male cavities.

480 Metri-Pack Cavity Plug*

Part #	Cavity Inside Diameter	Material	Color
12066082	8.5mm	Silicone	Green

*Cavity plugs seal unused female and male cavities.

630 Metri-Pack Cavity Plug*

Part #	Cavity Inside Diameter	Material	Color
12059255	9.8mm	Silicone	Green

*Cavity plugs seal unused female and male cavities.

NOTE: Specifications in this catalog are for general reference only and are subject to change without notice. To verify product information, please contact a Delphi representative.

Peters de Laet
503-661-5088 – phone 503-661-5328 – fax
www.pdel.com

Mixed

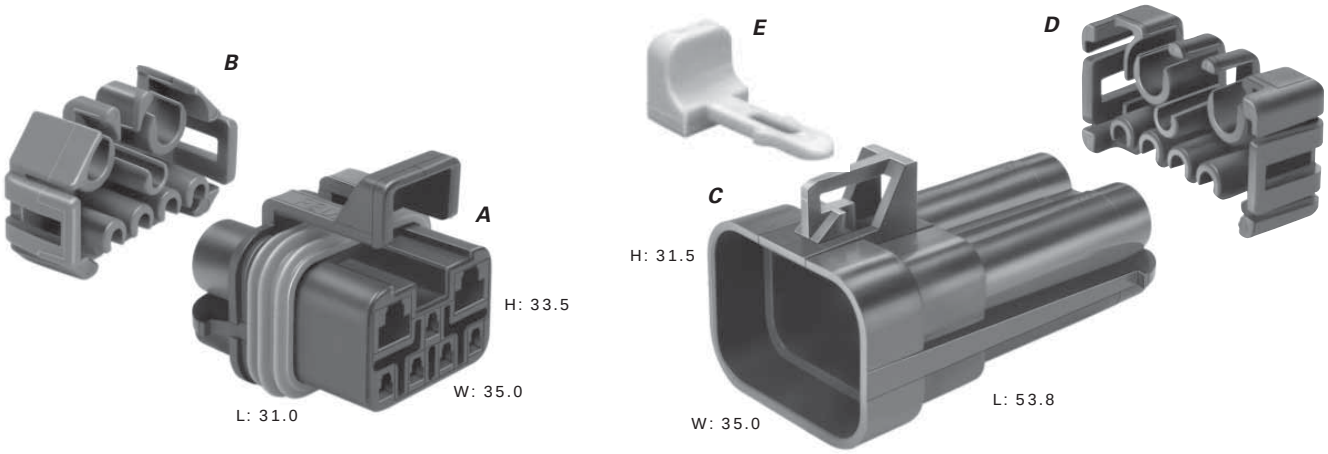

Total Mated Length: 69.3mm

A. Part No: 12059472

Description:	Connector Assembly 7F
Size:	31.0L x 33.5H x 35.0W
Color:	Black
Material:	PA66 HS IM
Terminals:	See Page 2.72
Seals/Plugs:	See Page 2.74

B. Part No: 12052486

Description:	TPA
Color:	Md. Gray
Material:	PA66 HS IM

C. Part No: 12052200

Description:	Connector 7M (Clip Slot)
Size:	53.8L x 31.5H x 35.0W
Color:	Black
Material:	PA66 HS IM
Terminals:	See Page 2.73
Seals/Plugs:	See Page 2.74

D. Part No: 12052199

Description:	TPA
Color:	Black
Material:	PA6

E. Part No: 12020833

Description:	CPA
Color:	Gray
Material:	PBT

KEY:

- ◪ 150 SERIES
- ● 480 SERIES

Mixed connectors feature a combination of different terminal cavities, as indicated by the key.

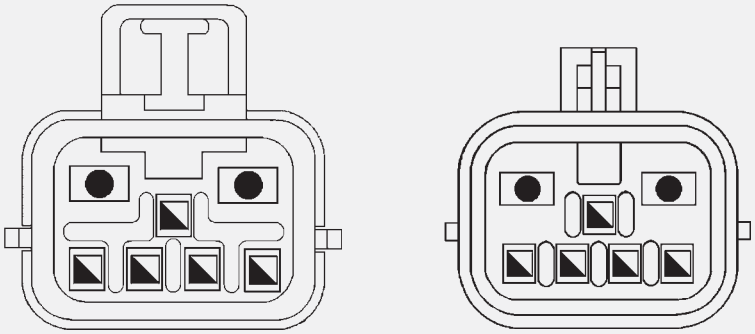

NOTE: Specifications in this catalog are for general reference only and are subject to change without notice. To verify product information, please contact a Delphi representative.

Peters de Laet
503-661-5088 – phone 503-661-5328 – fax
www.pdel.com

Mixed Device Connections

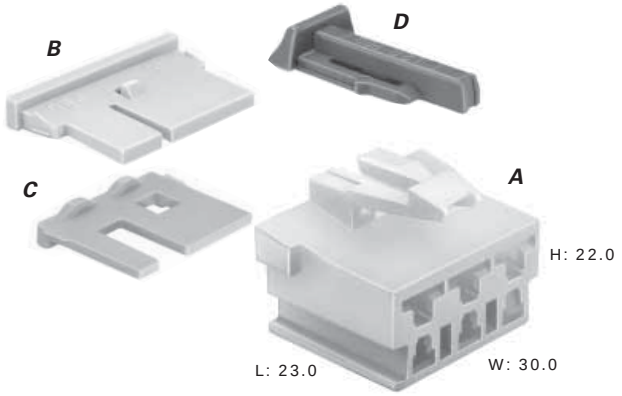

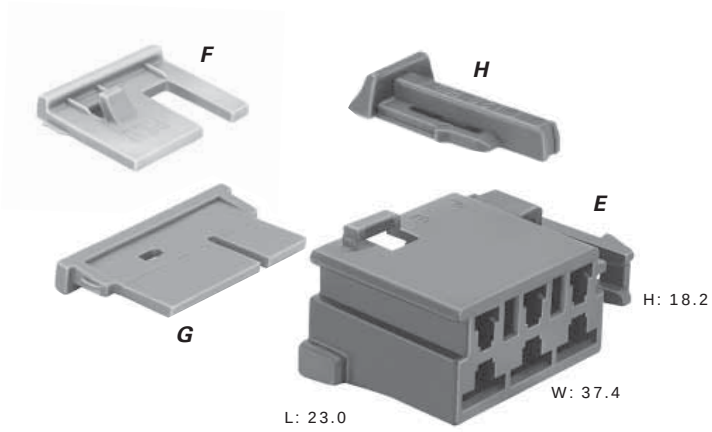

A. Part No: 12129842

Description:	Connector 6F
Size:	23.0L x 22.0H x 30.0W
Color:	Natural
Material:	PA66 HS IM
Terminals:	See Page 2.68
Typical App:	Switch

B. Part No: 12162301

Description:	TPA
Color:	Lt. Gray
Material:	PA66 HS IM

C. Part No: 12162300

Description:	TPA
Color:	Blue
Material:	PA66 HS IM

D. Part No: 12052834

Description:	CPA
Color:	Green
Material:	PP

E. Part No: 12162229 (Black) 12110075 (Cream)*

Description:	Connector 6F
Size:	23.0L x 18.2H x 37.4W
Material:	PA66 HS IM
Terminals:	See Page 2.68
Typical App:	Switch

*Reversed locking feature.

F. Part No: 12162300

Description:	TPA
Color:	Blue
Material:	PA66 HS IM

G. Part No: 12162299

Description:	TPA
Color:	Md. Gray
Material:	PA66 HS IM

H. Part No: 12052834

Description:	CPA
Color:	Green
Material:	PP

KEY:
- ■ 280 SERIES
- ▲ 630 SERIES

Mixed connectors feature a combination of different terminal cavities, as indicated by the key.

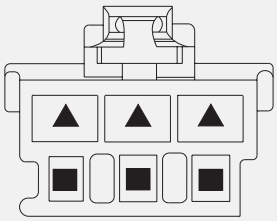

KEY:
- ■ 280 SERIES
- ▲ 630 SERIES

Mixed connectors feature a combination of different terminal cavities, as indicated by the key.

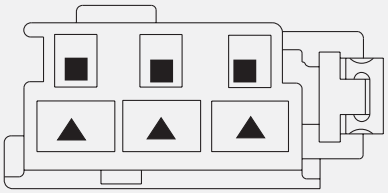

NOTE: Specifications in this catalog are for general reference only and are subject to change without notice. To verify product information, please contact a Delphi representative.

Peters de Laet
503-661-5088 – phone 503-661-5328 – fax
www.pdel.com

Mixed Device Connections

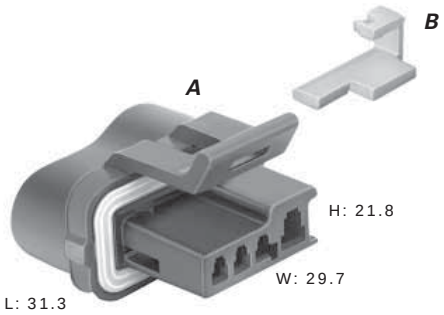

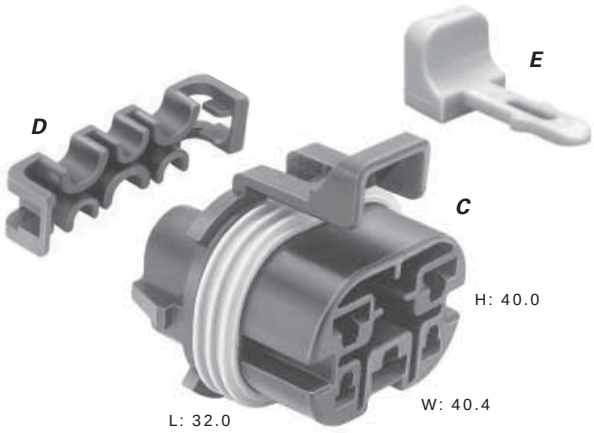

A. Part No: 12124898

Description:	Connector Assembly 4F
Size:	31.3L x 21.8H x 29.7W
Color:	Black
Material:	PBT
Terminals:	See Page 2.72
Seals/Plugs:	See Page 2.74
Typical App:	Alternator

B. Part No: 12045897

Description:	Secondary Lock
Color:	Natural
Material:	PBT

C. Part No: 12052287

Description:	Connector Assembly 5F
Size:	32.0L x 40.0H x 40.4W
Color:	Black
Material:	PA66 HS IM
Terminals:	See Page 2.72
Seals/Plugs:	See Page 2.74
Typical App:	Switch

D. Part No: 12052290

Description:	TPA
Color:	Black
Material:	PA66 HS IM

E. Part No: 12020833

Description:	CPA
Color:	Gray
Material:	PBT

KEY:
- ◪ 150 SERIES
- ■ 280 SERIES

Mixed connectors feature a combination of different terminal cavities, as indicated by the key.

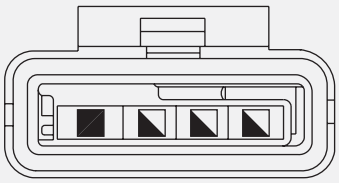

KEY:
- ■ 280 SERIES
- ▲ 630 SERIES

Mixed connectors feature a combination of different terminal cavities, as indicated by the key.

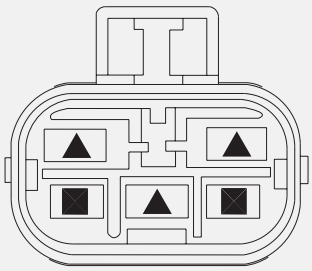

NOTE: Specifications in this catalog are for general reference only and are subject to change without notice. To verify product information, please contact a Delphi representative.

Peters de Laet
503-661-5088 – phone 503-661-5328 – fax
www.pdel.com

Mixed Device Connections

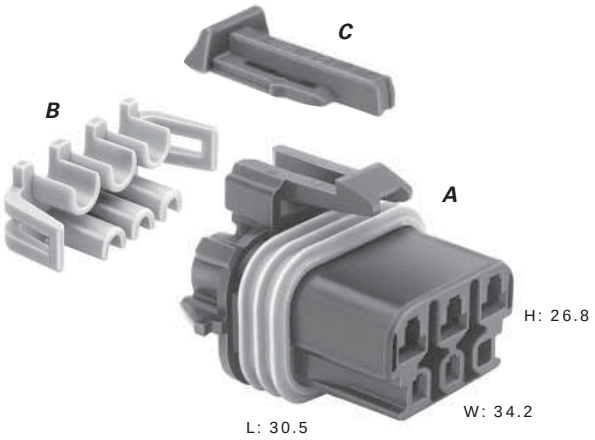

A. Part No: 12186347

Description:	Connector Assembly 6F
Size:	30.5L x 26.8H x 34.2W
Color:	Md. Gray
Material:	PA66 HS IM
Terminals:	See Page 2.72
Seals/Plugs:	See Page 2.74
Typical App:	Wiper Motor

B. Part No: 12129124

Description:	TPA
Color:	Lt. Gray
Material:	PA66 HS IM

C. Part No: 12052834

Description:	CPA
Color:	Green
Material:	PP

KEY:

- ◪ 150 SERIES
- ■ 280 SERIES

Mixed connectors feature a combination of different terminal cavities, as indicated by the key.

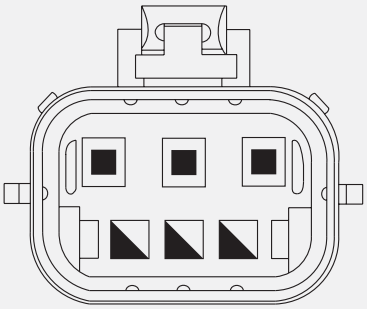

NOTE: Specifications in this catalog are for general reference only and are subject to change without notice. To verify product information, please contact a Delphi representative.

Peters de Laet
503-661-5088 – phone 503-661-5328 – fax
www.pdel.com

Junction Systems

Available in pass-through and in-line connections, Metri-Pack Junction System Series connectors can meet or exceed the requirements for most marine, appliance, and industrial control applications.

Ideally suited for combination low energy and high current applications that do not require environmental protection, Metri-Pack Junction System Series products are extremely versatile.

Available in pass-through and in-line connections for underhood vehicle applications, Metri-Pack Junction System Series sealed connectors can meet or exceed the requirements for most marine, appliance, and industrial control applications.

Metri-Pack Junction Series sealed systems are ideally suited for combination, low-energy electronic, and high current applications that require protection from environmental hazards.

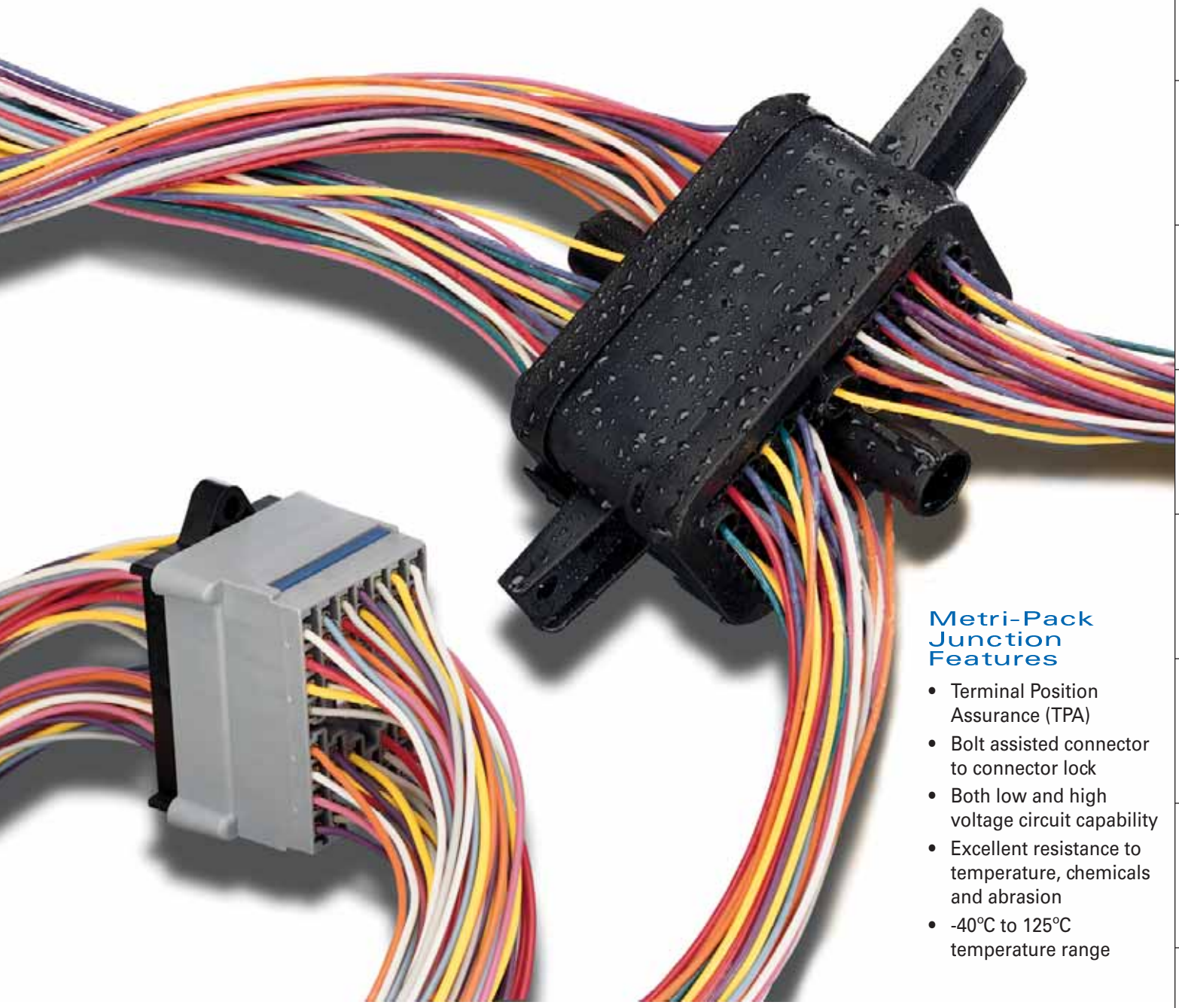

Metri-Pack Junction Features

- Terminal Position Assurance (TPA)
- Bolt assisted connector to connector lock
- Both low and high voltage circuit capability
- Excellent resistance to temperature, chemicals and abrasion
- -40°C to 125°C temperature range

Peters de Laet
503-661-5088 – phone 503-661-5328 – fax
www.pdel.com

Junction Systems

Female Unsealed System

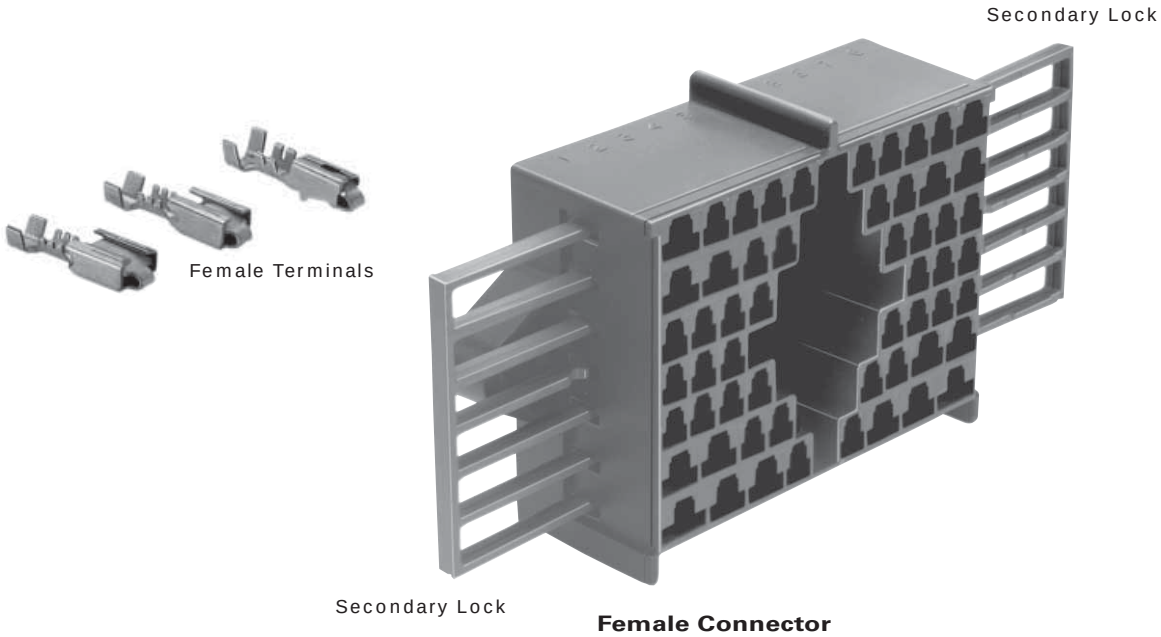

Junction Systems Female Connectors Unsealed				
# Cavities	**Connector**	**Color**	**Material**	**Secondary Lock**
42way: 42	15492518	Black	PA66 HS IM	12015510
				12015511
56way: 56	15492672	Black	PA66 HS IM	15324764
116way: 116	15492622	Black	PA66 HS IM 14% GF	12047751

NOTE: Specifications in this catalog are for general reference only and are subject to change without notice. To verify product information, please contact a Delphi representative.

Peters de Laet
503-661-5088 – phone 503-661-5328 – fax
www.pdel.com

Junction Systems

Male Unsealed System

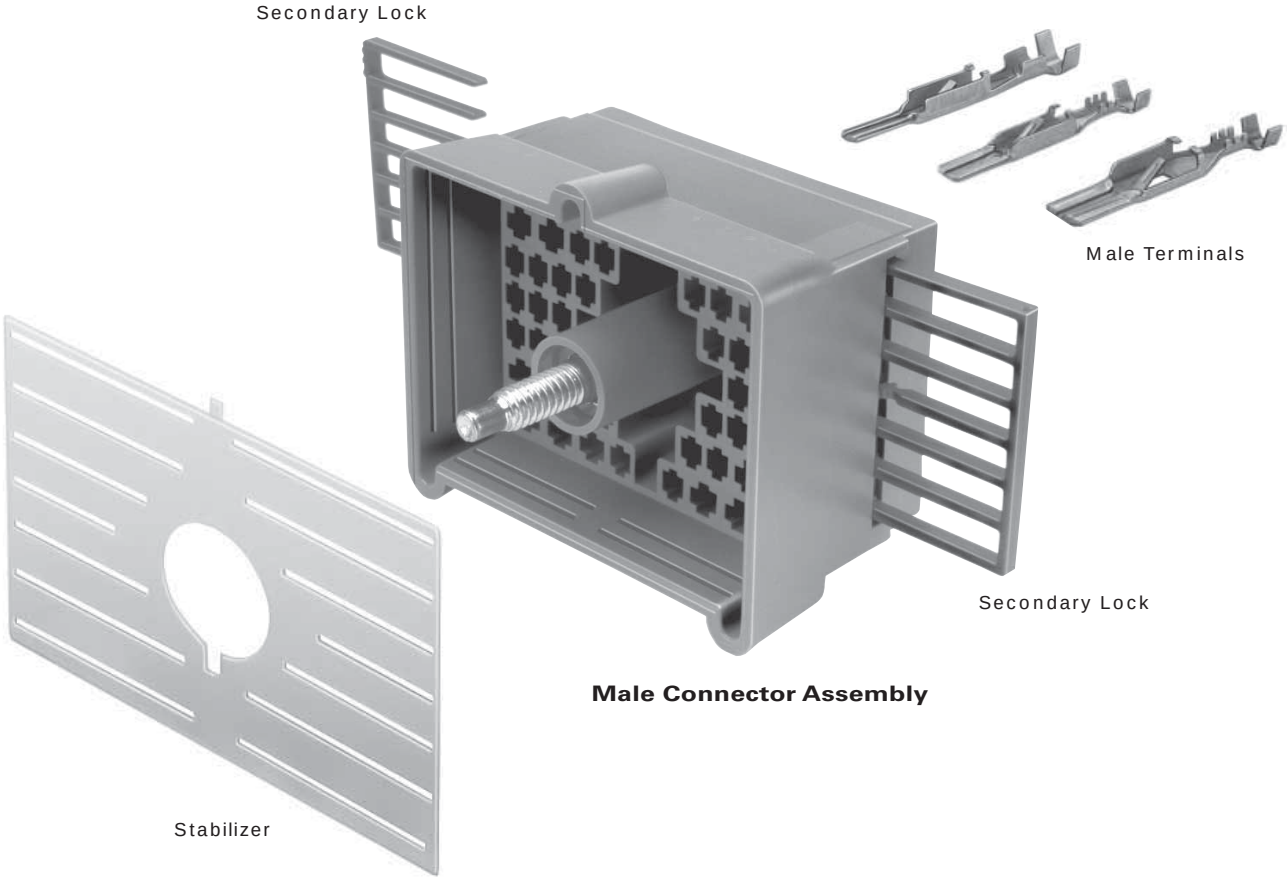

Junction Systems Male Connector Assemblies Unsealed					
# Cavities	**Conn. Asm.**	**Color**	**Material**	**Secondary**	**Stabilizer Lock**
42way: 25	15492519	Black	PA66 HS IM	12015510	12162412
: 17	12020629	Black	PA66 HS IM	12015511	12162413
56way: 56	15492558	Md. Gray	PA66 HS IM	15324764	12186869
116way: 116	15492657	Black	PPE	15402131	12124732

NOTE: Specifications in this catalog are for general reference only and are subject to change without notice. To verify product information, please contact a Delphi representative.

Peters de Laet
503-661-5088 – phone 503-661-5328 – fax
www.pdel.com

Junction Systems

Unsealed System Application Information

150 Series Terminals – Tin Plated

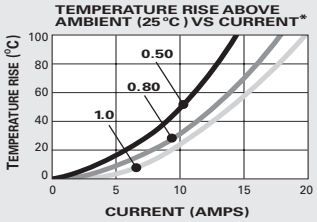

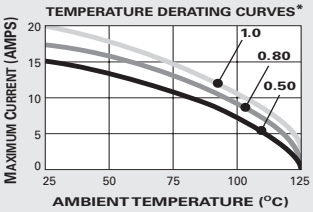

CABLE RANGE (mm²): 0.35-1.0
CURRENT RANGE (AMPS): 0-14
TEMP RANGE °C: ..... -40 to 125
RESISTANCE: ..... <10mΩ@20mV

VOLTAGE DROP: ... <10.0mV/amp
CENTERLINE SPACING (mm): .....
..... Connector Dependent
BLADE WIDTH (mm): 1.5

280 Series Terminals – Tin Plated

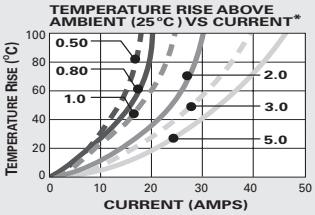

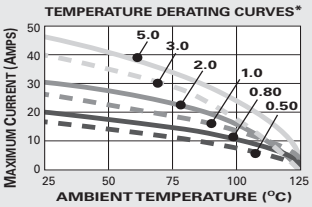

CABLE RANGE (mm²): 0.35-5.0
CURRENT RANGE (AMPS): 0-30
TEMP RANGE °C: ..... -40 to 125
RESISTANCE: ..... <10mΩ@20mV

VOLTAGE DROP: ..... <3.0mV/amp
CENTERLINE SPACING (mm): .....
..... Connector Dependent
BLADE WIDTH (mm): 2.8

*The test data are based on single circuits in free space and were generated using a "Lumped Resistance" model. This model does not account for all of the variables that would be present in an actual application. For actual product performance, contact your regional support representative.

150 Series Female Terminals Unsealed

Part #	Cable Range (mm²)	Material	Plating
12047767	1.0-0.80	Silicon Bronze	Tin
12064971	0.50-0.35	Silicon Bronze	Tin

480 Series Female Terminals Unsealed

Part #	Cable Range (mm²)	Material	Plating
12084595	5.0-3.0	Tin Brass	Tin
12052221	3.0	Tin Brass	Tin
12124304	2.0-1.0	Tin Brass	Tin
12015860	0.80-0.50	Tin Brass	Tin
12052219	0.50-0.35	Tin Brass	Tin
12020366	2.0-1.0 (1 Req'd.) 0.80-0.50 (1 Req'd.)	Tin Brass	Tin

280 Series Female Terminals Unsealed

Part #	Cable Range (mm²)	Material	Plating
12015858	5.0-3.0	Tin Brass	Tin
12129494	3.0-2.0	Tin Brass	Tin
12034046	0.80-0.50	Tin Brass	Tin
12052217	0.50-0.35	Tin Brass	Tin
12162597*	3.0-2.0	Tin Brass	Tin
12162595*	1.0-0.80	Tin Brass	Tin
12162596*	0.50-0.35	Tin Brass	Tin

630 Series Female Terminals Unsealed

Part #	Cable Range (mm²)	Material	Plating
12084590	5.0-3.0	Tin Brass	Tin
12052224	3.0	Tin Brass	Tin
12084596	5.0-3.0 (2 Req'd.)	Tin Brass	Tin
12015870	2.0-1.0	Tin Brass	Tin
12015869	0.80-0.50	Tin Brass	Tin
12020035	0.80-0.50 (2 Req'd.)	Tin Brass	Tin
12052222	0.50-0.35	Tin Brass	Tin

***Thin Stock**—Electrical current restrictions may apply.

NOTE: Specifications in this catalog are for general reference only and are subject to change without notice. To verify product information, please contact a Delphi representative.

Peters de Laet
503-661-5088 – phone 503-661-5328 – fax
www.pdel.com

Junction Systems

Unsealed System Application Information

480 Series Terminals – Tin Plated

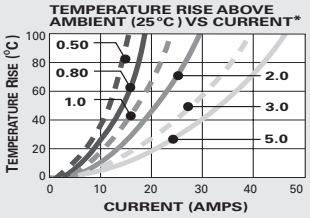

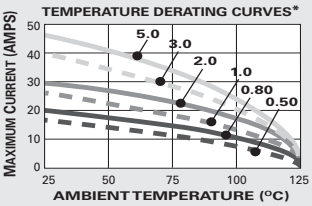

CABLE RANGE (mm²): 0.35-5.0
CURRENT RANGE (AMPS): 0-42
TEMP RANGE °C: ..... -40 to 125
RESISTANCE: ..... <10mΩ@20mV

VOLTAGE DROP: ..... <3.0mV/amp
CENTERLINE SPACING (mm): .....
..... Connector Dependent
BLADE WIDTH (mm): 4.8

630 Series Terminals – Tin Plated

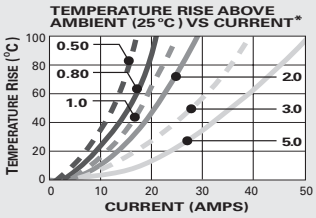

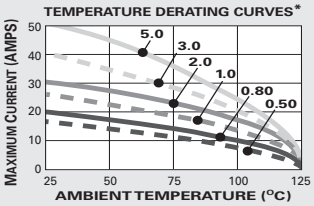

CABLE RANGE (mm²): 0.35-5.0
CURRENT RANGE (AMPS): 0-46
TEMP RANGE °C: ..... -40 to 125
RESISTANCE: ..... <10mΩ@20mV

VOLTAGE DROP: ..... <3.0mV/amp
CENTERLINE SPACING (mm): .....
..... Connector Dependent
BLADE WIDTH (mm): 6.3

*The test data are based on single circuits in free space and were generated using a "Lumped Resistance" model. This model does not account for all of the variables that would be present in an actual application. For actual product performance, contact your regional support representative.

150 Series Male Terminals Unsealed

Part #	Cable Range (mm²)	Material	Plating
12047581	0.80-0.50	Tin Brass	Tin
12059894	0.50-0.35	Tin Brass	Tin

480 Series Male Terminals Unsealed

Part #	Cable Range (mm²)	Material	Plating
12033820	5.0-3.0	Tin Brass	Tin over Copper
12052827	3.0	Tin Brass	Tin over Copper
12020120	2.0-1.0	Tin Brass	Tin over Copper
12020119	0.80-0.50	Tin Brass	Tin over Copper
12066269	0.50-0.35	Tin Brass	Tin over Copper
12020784	0.35 (2 Req'd.)	Tin Brass	Tin over Copper

280 Series Male Terminals Unsealed

Part #	Cable Range (mm²)	Material	Plating
12084586	5.0-3.0	Tin Brass	Tin
12129498	3.0-2.0	Tin Brass	Tin
12020116	1.0	Tin Brass	Tin
12034047	0.80-0.50	Tin Brass	Tin
12066271	0.50-0.35	Tin Brass	Tin
12020782	0.35 (2 Req'd.)	Tin Brass	Tin

630 Series Male Terminals Unsealed

Part #	Cable Range (mm²)	Material	Plating
12066493	5.0-3.0	Tin Brass	Tin over Copper
12052826	3.0	Tin Brass	Tin over Copper
12020365	3.0 (2 Req'd.)	Tin Brass	Tin over Copper
12020126	2.0-1.0	Tin Brass	Tin over Copper
12020125	0.80-0.50	Tin Brass	Tin over Copper
12033972	0.80-0.50 (2 Req'd.)	Tin Brass	Tin over Copper
12066454	0.50-0.35	Tin Brass	Tin over Copper

NOTE: Specifications in this catalog are for general reference only and are subject to change without notice. To verify product information, please contact a Delphi representative.

Peters de Laet
503-661-5088 – phone 503-661-5328 – fax
www.pdel.com

Junction Systems

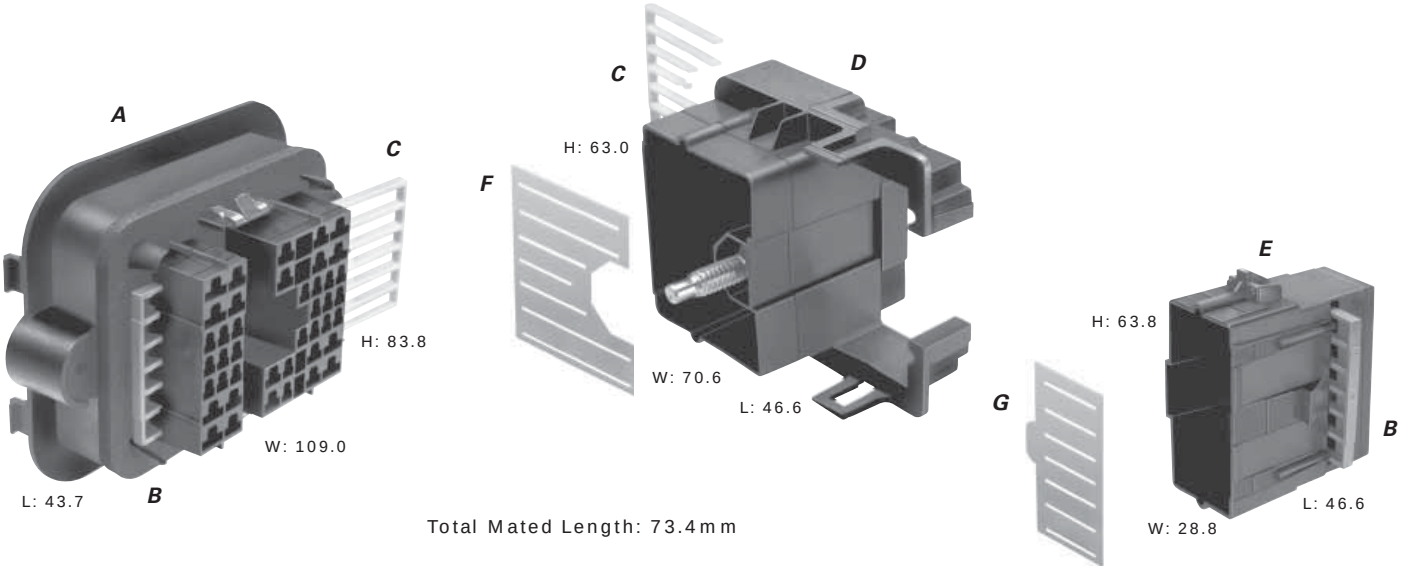

Total Mated Length: 73.4mm

A. Part No: 15492518

Description:	Connector Assembly 42F
Size:	43.7L x 83.8H x 109.0W
Color:	Black
Material:	PA66 HS IM
Terminals:	See Page 2.82
Note:	Available with Grease Covers 12015513 and 12033602

B. Part No: 12015511

Description:	Secondary Lock
Number Req:	2
Color:	Blue
Material:	PBT

C. Part No: 12015510

Description:	Secondary Lock
Number Req:	2
Color:	Natural
Material:	PBT

D. Part No: 15492519

Description:	Connector Assembly 25M
Size:	46.6L x 63.0H x 70.6W
Color:	Black
Material:	PA66 HS IM
Terminals:	See Page 2.83

E. Part No: 12020629

Description:	Connector 17M
Size:	46.6L x 63.8H x 28.8W
Color:	Black
Material:	PA66 HS IM
Terminals:	See Page 2.83
Note:	Available with Grease Cover 12033601

F. Part No: 12162412

Description:	Stabilizer
Color:	Natural
Material:	Mylar

G. Part No: 12162413

Description:	Stabilizer
Color:	Natural
Material:	Mylar

KEY:

- ■ 280 SERIES
- ● 480 SERIES
- ▲ 630 SERIES

Mixed connectors feature a combination of different terminal cavities, as indicated by the key.

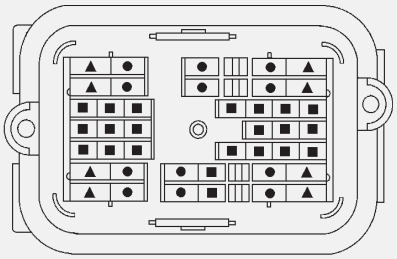

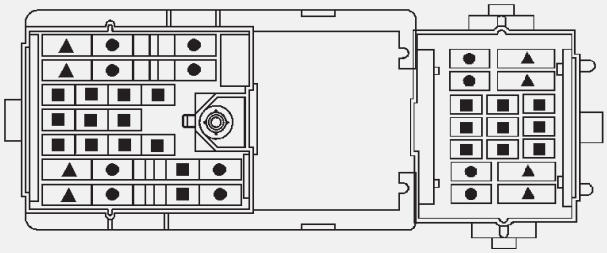

NOTE: Specifications in this catalog are for general reference only and are subject to change without notice. To verify product information, please contact a Delphi representative.

Peters de Laet
503-661-5088 – phone 503-661-5328 – fax
www.pdel.com

Junction Systems

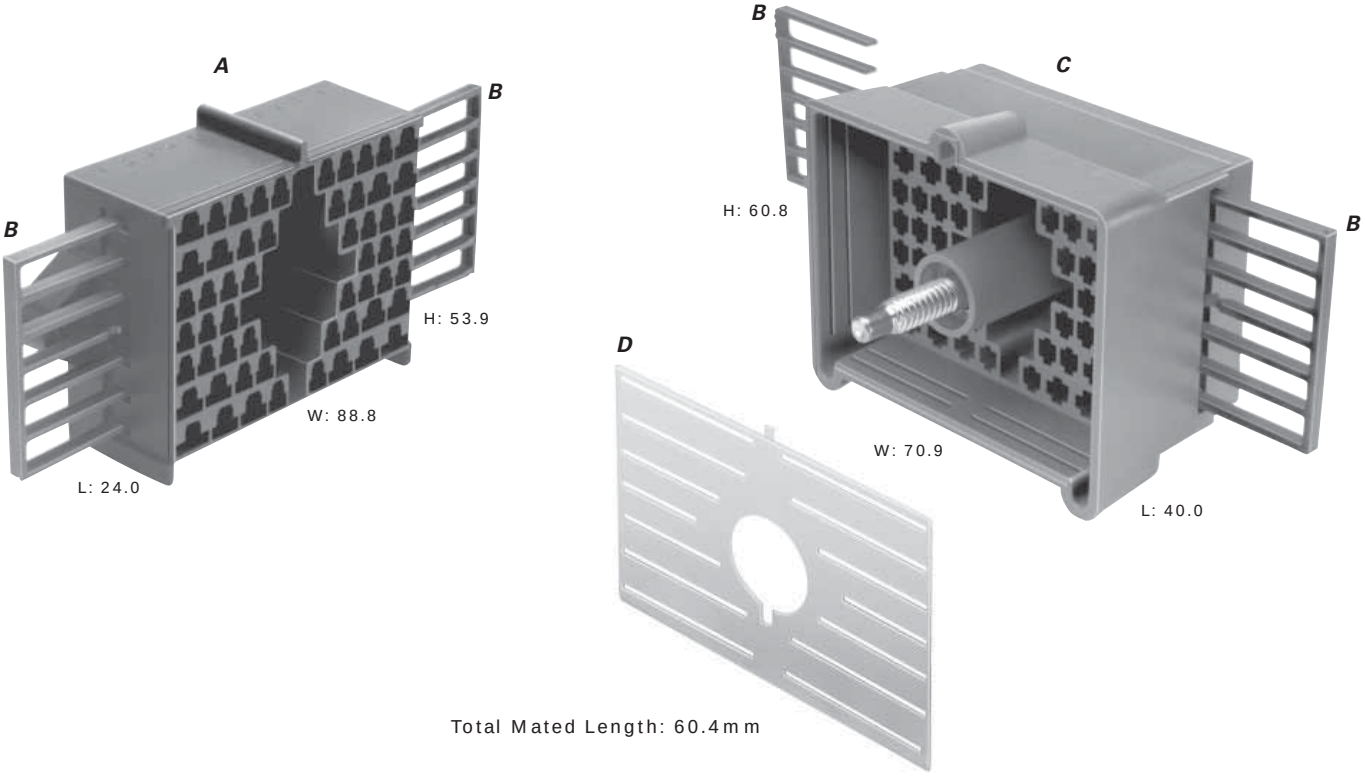

A. Part No: 15492672

Description:	Connector Assembly 56F
Size:	24.0L x 53.9H x 88.8W
Color:	Black
Material:	PA66 HS IM
Terminals:	See Page 2.82

B. Part No: 15324764

Description:	Secondary Lock
Number Req:	4
Color:	Blue
Material:	PBT

C. Part No: 15492558

Description:	Connector Assembly 56M
Size:	40.0L x 60.8H x 70.9W
Color:	Md. Gray
Material:	PA66 HS IM
Terminals:	See Page 2.83

D. Part No: 12186869

Description:	Stabilizer
Color:	Natural
Material:	Mylar

KEY:

- ■ 280 SERIES
- ● 480 SERIES
- ▲ 630 SERIES

Mixed connectors feature a combination of different terminal cavities, as indicated by the key.

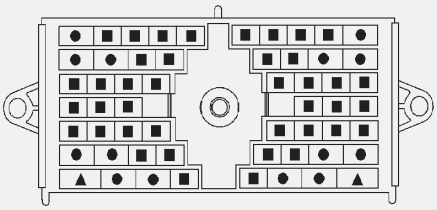

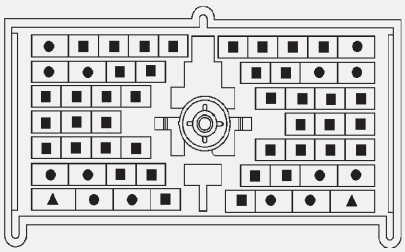

NOTE: Specifications in this catalog are for general reference only and are subject to change without notice. To verify product information, please contact a Delphi representative.

Peters de Laet
503-661-5088 – phone 503-661-5328 – fax
www.pdel.com

Junction Systems

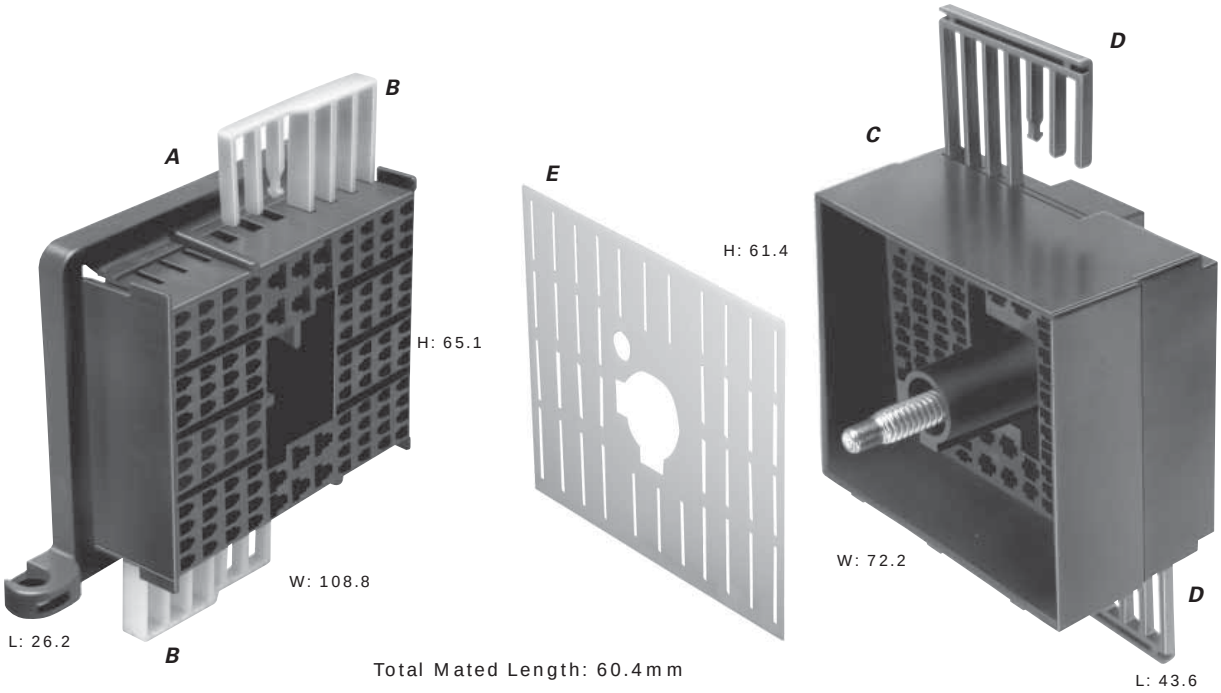

A. Part No: 15492622

Description:	Connector Assembly 116F
Size:	26.2L x 65.1H x 108.8W
Color:	Black
Material:	PA66 HS IM 14% GF
Terminals:	See Page 2.82

B. Part No: 12047751

Description:	Secondary Lock
Number Req:	2
Color:	Natural
Material:	PBT

C. Part No: 15492657

Description:	Connector Assembly 116M
Size:	43.6L x 61.4H x 72.2W
Color:	Black
Material:	PPE
Terminals:	See Page 2.83
Note:	See product print for assembly information

D. Part No: 15402131

Description:	Secondary Lock
Number Req:	2
Color:	Blue
Material:	PBT

E. Part No: 12124732

Description:	Stabilizer
Color:	Natural
Material:	Mylar

KEY:

- ◪ 150 SERIES
- ■ 280 SERIES

Mixed connectors feature a combination of different terminal cavities, as indicated by the key.

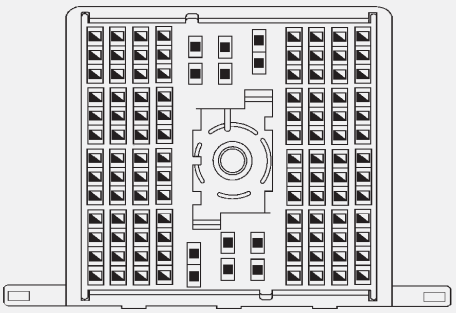

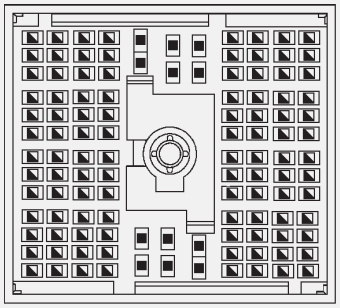

NOTE: Specifications in this catalog are for general reference only and are subject to change without notice. To verify product information, please contact a Delphi representative.

Peters de Laet
503-661-5088 – phone 503-661-5328 – fax
www.pdel.com

Junction Systems

Female Sealed System

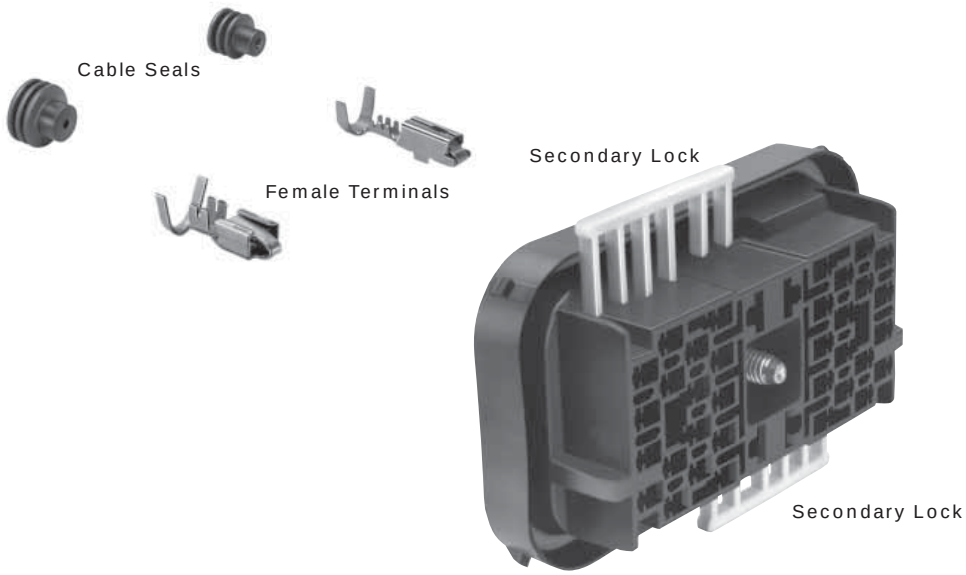

Female Connector Assembly

Junction Systems Female Connector Assemblies Sealed				
# Cavities	**Conn. Asm.**	**Color**	**Material**	**Secondary Lock**
30	15492567	Black	PBT	12066050
36	15492591*	Black	PBT	12064835
38	15492642	Black	PA66 14% GF HS IM & PA66 15% GF + MD 25% HS	12129669
78	15492601	Black	PA66 HS 33% GF	12129214

*Note: 15492591 (F) is unsealed for use in a protected environment.

NOTE: Specifications in this catalog are for general reference only and are subject to change without notice. To verify product information, please contact a Delphi representative.

Peters de Laet
503-661-5088 – phone 503-661-5328 – fax
www.pdel.com

Junction Systems

Male Sealed System

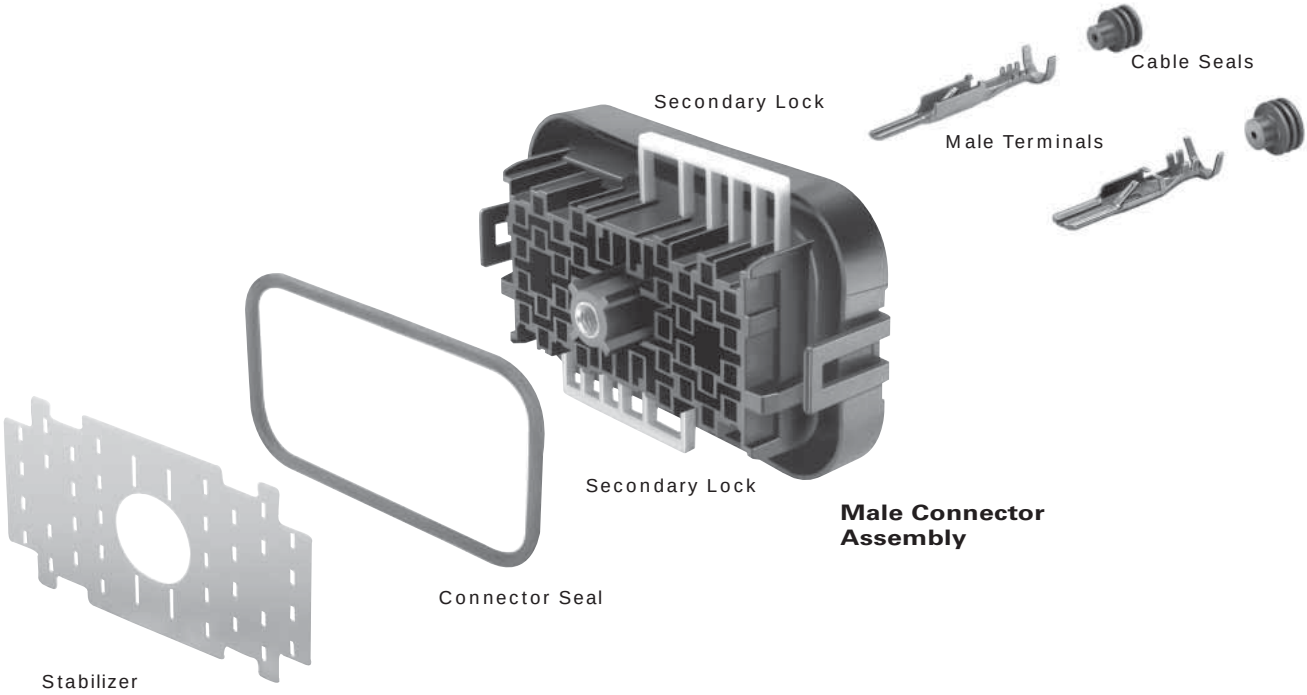

Junction Systems Male Connector Assemblies Sealed							
# Cavities	**Conn. Asm.**	**Color**	**Material**	**Secondary Lock**	**Stabilizer**	**Shroud**	**Connector Seal**
30	12160959	Black	PBT	12065848	–	13577943	12065849
36	15492562	Black	PBT	12064834	–	12066590	12064837
38	12191487	Dk.Gray	PA66 HS IM 14% GF	12129670	15317352	12161191	12129672
78	15498985	Black	PA66 HS 33% GF	12129213	12162573	12162527	–

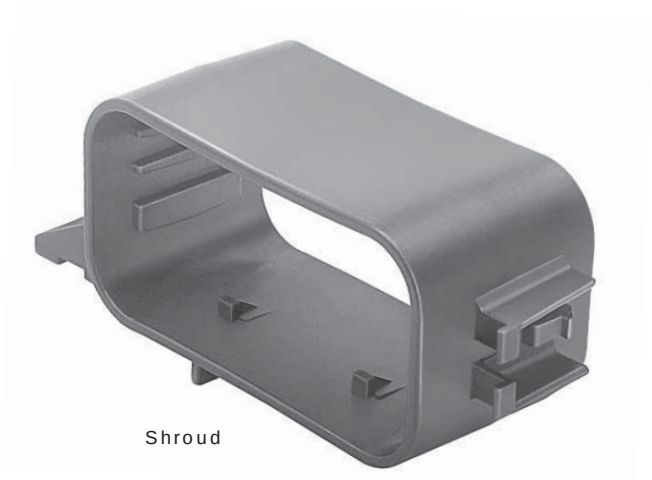

NOTE: Specifications in this catalog are for general reference only and are subject to change without notice. To verify product information, please contact a Delphi representative.

Peters de Laet
503-661-5088 – phone 503-661-5328 – fax
www.pdel.com

Peters de Laet
503-661-5088 – phone 503-661-5328 – fax
www.pdel.com

Junction Systems

Sealed System Application Information

150 Series Terminals – Tin Plated

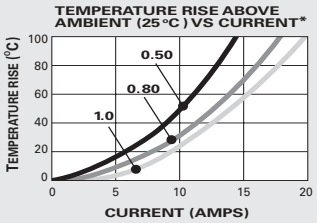

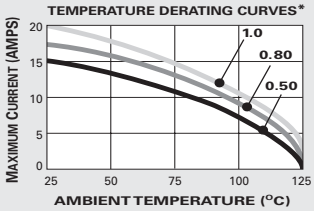

CABLE RANGE (mm²): 0.35-1.0
CURRENT RANGE (AMPS): 0-14
TEMP RANGE °C: ..... -40 to 125
RESISTANCE: ..... <10mΩ@20mV

VOLTAGE DROP: ..... <10.0mV/amp
CENTERLINE SPACING (mm): .....
.....Connector Dependent
BLADE WIDTH (mm): 1.5

280 Series Terminals – Tin Plated

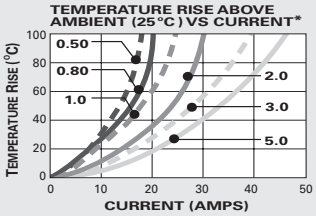

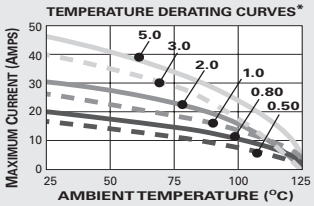

CABLE RANGE (mm²): 0.35-5.0
CURRENT RANGE (AMPS): 0-30
TEMP RANGE °C: ..... -40 to 125
RESISTANCE: ..... <10mΩ@20mV

VOLTAGE DROP: ..... <3.0mV/amp
CENTERLINE SPACING (mm): .....
.....Connector Dependent
BLADE WIDTH (mm): 2.8

*The test data are based on single circuits in free space and were generated using a "Lumped Resistance" model. This model does not account for all of the variables that would be present in an actual application. For actual product performance, contact your regional support representative.

150 Series Female Terminals Sealed

Part #	Cable Range (mm²)	Material	Plating
12048074	1.0-0.80-0.50	Silicon Bronze	Tin
12084200	0.50-0.35	Silicon Bronze	Tin
12160223	1.0-0.80	Beryllium Copper	Silver/Nickel
12160222	0.50-0.35	Beryllium Copper	Silver/Nickel

280 Series Female Terminals Sealed

Part #	Cable Range (mm²)	Material	Plating
12077413	3.0	Tin Brass	Tin
12129493	3.0-2.0	Tin Brass	Tin
12077411	1.0-0.80-0.50	Tin Brass	Tin
12084201	0.50-0.35	Tin Brass	Tin
12176387	5.0	Beryllium Copper	Silver/Nickel
12176388	3.0-2.0	Beryllium Copper	Silver/Nickel
12176389	1.0-0.80	Beryllium Copper	Silver/Nickel

TANGLESS

280 Tangless Series Female Terminals Sealed

Part #	Cable Range (mm²)	Material	Plating
12110853	5.0-3.0	Tin Brass	Tin
12129409	2.0	Tin Brass	Tin
12110845*	3.0-2.0	Tin Brass	Tin
12110847*	1.0-0.80	Tin Brass	Tin
12110846*	0.50-0.35	Tin Brass	Tin

Use for Part No. 15492642 (Shown on Page 2.95)

***Thin Stock**—Electrical current restrictions may apply.

480 Series Female Terminals Sealed

Part #	Cable Range (mm²)	Material	Plating
12052139	5.0-3.0	Tin Brass	Tin
12048451	2.0-1.0	Tin Brass	Tin
12048450	0.80-0.50	Tin Brass	Tin

630 Series Female Terminals Sealed

Part #	Cable Range (mm²)	Material	Plating
12052456	5.0-3.0	Tin Brass	Tin
12052455	2.0-1.0	Tin Brass	Tin
12052457	0.80-0.50	Tin Brass	Tin

NOTE: Specifications in this catalog are for general reference only and are subject to change without notice. To verify product information, please contact a Delphi representative.

Peters de Laet
503-661-5088 – phone 503-661-5328 – fax
www.pdel.com

Junction Systems

Sealed System Application Information

480 Series Terminals – Tin Plated

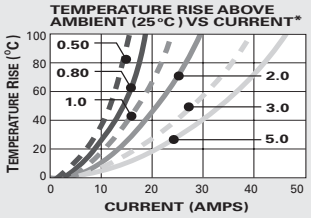

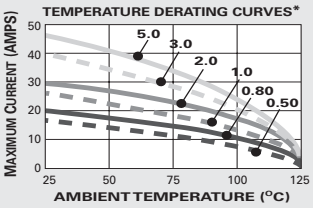

CABLE RANGE (mm²): 0.35-5.0
CURRENT RANGE (AMPS): 0-42
TEMP RANGE °C: ..... -40 to 125
RESISTANCE: ..... <10mΩ@20mV

VOLTAGE DROP: ..... <3.0mV/amp
CENTERLINE SPACING (mm): .....
..... Connector Dependent
BLADE WIDTH (mm): 4.8

630 Series Terminals – Tin Plated

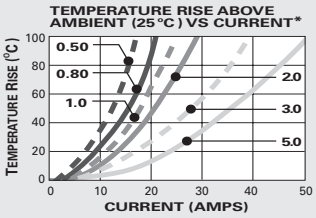

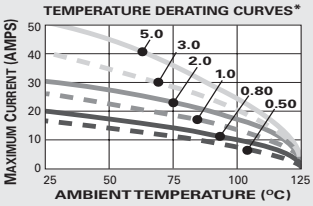

CABLE RANGE (mm²): 0.35-5.0
CURRENT RANGE (AMPS): 0-46
TEMP RANGE °C: ..... -40 to 125
RESISTANCE: ..... <10mΩ@20mV

VOLTAGE DROP: ..... <3.0mV/amp
CENTERLINE SPACING (mm): .....
..... Connector Dependent
BLADE WIDTH (mm): 6.3

*The test data are based on single circuits in free space and were generated using a "Lumped Resistance" model. This model does not account for all of the variables that would be present in an actual application. For actual product performance, contact your regional support representative.

150 Series Male Terminals Sealed			
Part #	**Cable Range (mm²)**	**Material**	**Plating**
12045773	0.80-0.50	Tin Brass	Tin
12077628	0.50-0.35	Tin Brass	Tin

480 Series Male Terminals Sealed			
Part #	**Cable Range (mm²)**	**Material**	**Plating**
12052172	5.0	Tin Brass	Tin
12065197	3.0	Tin Brass	Tin
12065196	2.0-1.0	Tin Brass	Tin

280 Series Male Terminals Sealed			
Part #	**Cable Range (mm²)**	**Material**	**Plating**
12048254	3.0	Tin Brass	Tin
12129497	3.0-2.0	Tin Brass	Tin
12048159	0.80-0.50	Tin Brass	Tin
12124977	0.50-0.35	Tin Brass	Tin

630 Series Male Terminals Sealed			
Part #	**Cable Range (mm²)**	**Material**	**Plating**
12064736	5.0	Tin Brass	Tin
12064737	3.0	Tin Brass	Tin
12064735	2.0-1.0	Tin Brass	Tin
12064734	0.80-0.50	Tin Brass	Tin

NOTE: Specifications in this catalog are for general reference only and are subject to change without notice. To verify product information, please contact a Delphi representative.

Peters de Laet
503-661-5088 – phone 503-661-5328 – fax
www.pdel.com

Junction Systems

Sealed System Cable Seals & Cavity Plugs

150 Metri-Pack Cable Seals

Reel Part #	Loose Part #	Cable Dia.	Material	Color
12052924	15324973	2.85-2.03	Silicone	Dk. Red
12089442	15324976	2.15-1.60	Silicone	White
12052925	15324974	1.70-1.29	Silicone	Blue
12124669	15324975	1.009-0.995	Silicone	Tan

150 Metri-Pack Cavity Plug*

Part #	Cavity Inside Diameter	Material	Color
12059168	5.2mm	Silicone	Dk. Red

*Cavity plugs seal unused female and male cavities.

280 Metri-Pack Cable Seals

Reel Part #	Loose Part #	Cable Dia.	Material	Color
12015360	15324981	4.30-3.45	Silicone	Blue
12015359	15324980	3.49-2.81	Silicone	Gray
12015284	15324982	2.85-2.03	Silicone	Green
12041352	15324984	2.42-2.03	Silicone	Tan
12089444	15324985	2.15-1.60	Silicone	Purple
12034365	15324983	1.70-1.29	Silicone	Dk. Red

280 Metri-Pack Cavity Plug*

Part #	Cavity Inside Diameter	Material	Color
12010300	6.7mm	Silicone	Green

*Cavity plugs seal unused female and male cavities.

480 Metri-Pack Cable Seals

Reel Part #	Loose Part #	Cable Dia.	Material	Color
12065703	15324987	5.16-4.40	Silicone	Orange
12052453	15324990	4.50-3.61	Silicone	Purple
12052452	15324989	3.76-2.81	Silicone	Red
12048433	15324988	2.85-2.01	Silicone	White
12052931	15324991	2.15-1.60	Silicone	Yellow
12162068	15324992	1.70-1.29	Silicone	Pink

480 Metri-Pack Cavity Plug*

Part #	Cavity Inside Diameter	Material	Color
12066082	8.5mm	Silicone	Green

*Cavity plugs seal unused female and male cavities.

630 Metri-Pack Cable Seals

Reel Part #	Loose Part #	Cable Dia.	Material	Color
12059257	15324993	5.15-4.40	Silicone	Green
12059260	15324996	4.50-3.61	Silicone	Blue
12059258	15324994	3.75-2.81	Silicone	Lt. Gray
12059259	15324995	2.85-2.01	Silicone	Dk. Red
12077760	15324997	2.40-1.65	Silicone	Tan

630 Metri-Pack Cavity Plug*

Part #	Cavity Inside Diameter	Material	Color
12059255	9.8mm	Silicone	Green

*Cavity plugs seal unused female and male cavities.

NOTE: Specifications in this catalog are for general reference only and are subject to change without notice. To verify product information, please contact a Delphi representative.

Peters de Laet
503-661-5088 – phone 503-661-5328 – fax
www.pdel.com

Junction Systems

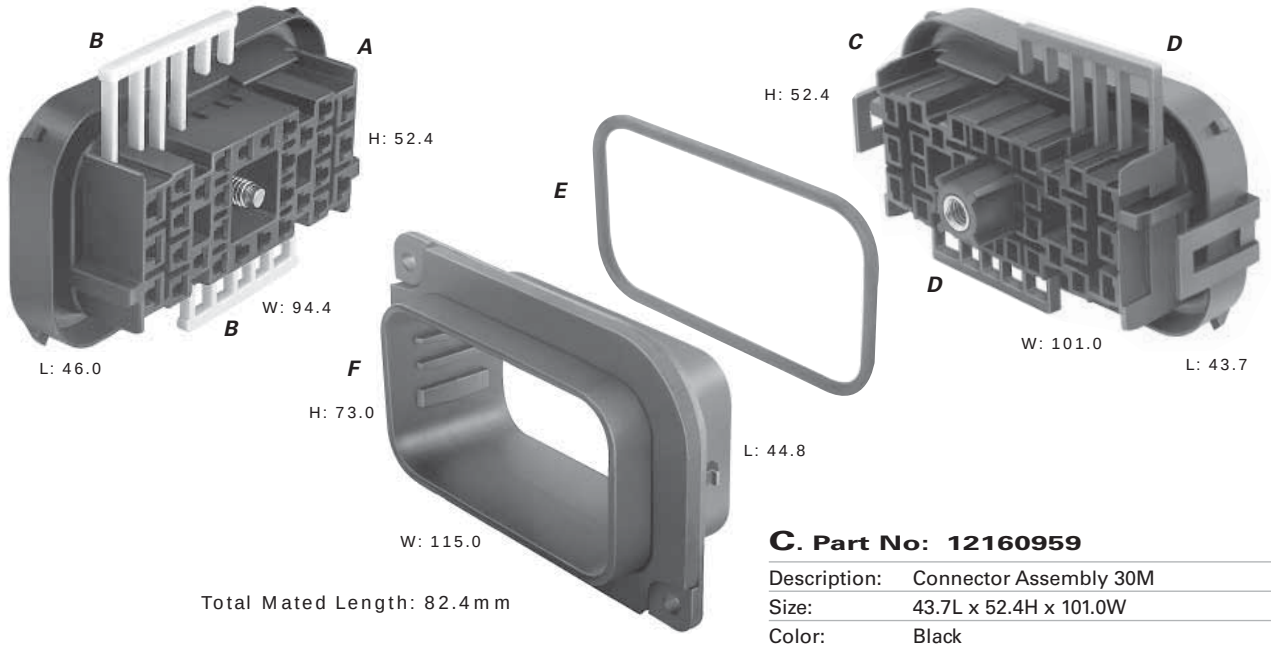

Total Mated Length: 82.4mm

A. Part No: 15492567

Description:	Connector Assembly 30F
Size:	46.0L x 52.4H x 94.4W
Color:	Black
Material:	PBT
Terminals:	See Page 2.90
Seals/Plugs:	See Page 2.92

B. Part No: 12066050

Description:	Secondary Lock
Number Req:	2
Color:	Natural
Material:	PBT

C. Part No: 12160959

Description:	Connector Assembly 30M
Size:	43.7L x 52.4H x 101.0W
Color:	Black
Material:	PBT
Terminals:	See Page 2.91
Seals/Plugs:	See Page 2.92
Note:	Wire dress cover 12066129 is available.

D. Part No: 12065848

Description:	Secondary Lock
Number Req:	2
Color:	Blue
Material:	PBT

E. Part No: 12065849

Description:	Connector Seal
Color:	Green
Material:	Silicone

F. Part No: 13577943

Description:	Pass-Through Shroud
Size:	44.8L x 73.0H x 115.0W
Color:	Black
Material:	PBT 30% GF
Note:	Body mount shroud 12065847 is available.

KEY:

- ■ 280 SERIES
- ● 480 SERIES

Mixed connectors feature a combination of different terminal cavities, as indicated by the key.

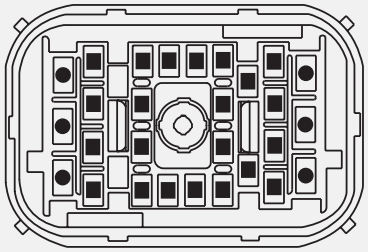

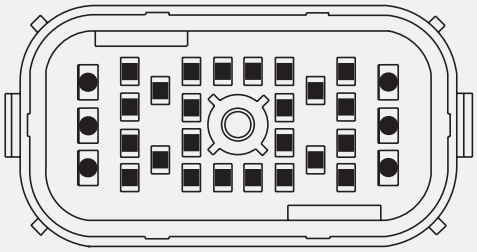

NOTE: Specifications in this catalog are for general reference only and are subject to change without notice. To verify product information, please contact a Delphi representative.

Peters de Laet
503-661-5088 – phone 503-661-5328 – fax
www.pdel.com

Junction Systems

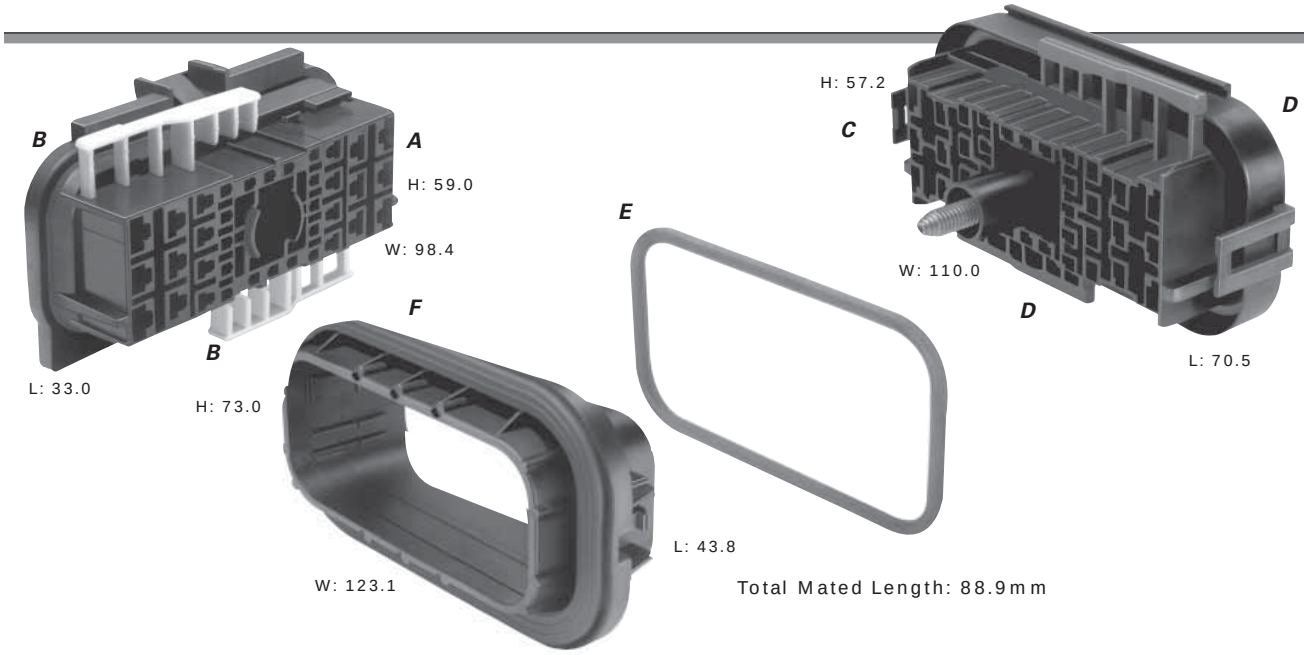

Total Mated Length: 88.9mm

A. Part No: 15492591

Description:	Connector Assembly 36F (Unsealed)
Size:	33.0L x 59.0H x 98.4W
Color:	Black
Material:	PBT
Terminals:	See Page 2.82 for Unsealed terminals

B. Part No: 12064835

Description:	Secondary Lock
Number Req:	2
Color:	Natural
Material:	PBT

C. Part No: 15492562

Description:	Connector Assembly 36M
Size:	70.5L x 57.2H x 110.0W
Color:	Black
Material:	PBT
Terminals:	See Page 2.91
Seals/Plugs:	See Page 2.92

D. Part No: 12064834

Description:	Secondary Lock
Number Req:	2
Color:	Blue
Material:	PBT

E. Part No: 12064837

Description:	Connector Seal
Color:	Green
Material:	Silicone

F. Part No: 12066590

Description:	Sliding Shroud
Size:	43.8L x 73.0H x 123.1W
Color:	Black
Material:	PBT 30% GF

KEY:

- ◪ 150 SERIES
- ■ 280 SERIES
- ● 480 SERIES
- ▲ 630 SERIES

Mixed connectors feature a combination of different terminal cavities, as indicated by the key.

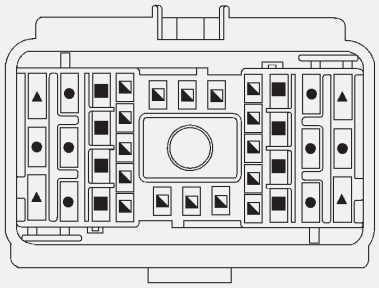

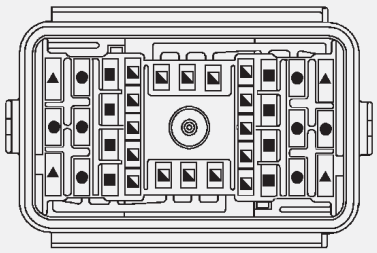

NOTE: Specifications in this catalog are for general reference only and are subject to change without notice. To verify product information, please contact a Delphi representative.

Peters de Laet
503-661-5088 – phone 503-661-5328 – fax
www.pdel.com

Junction Systems

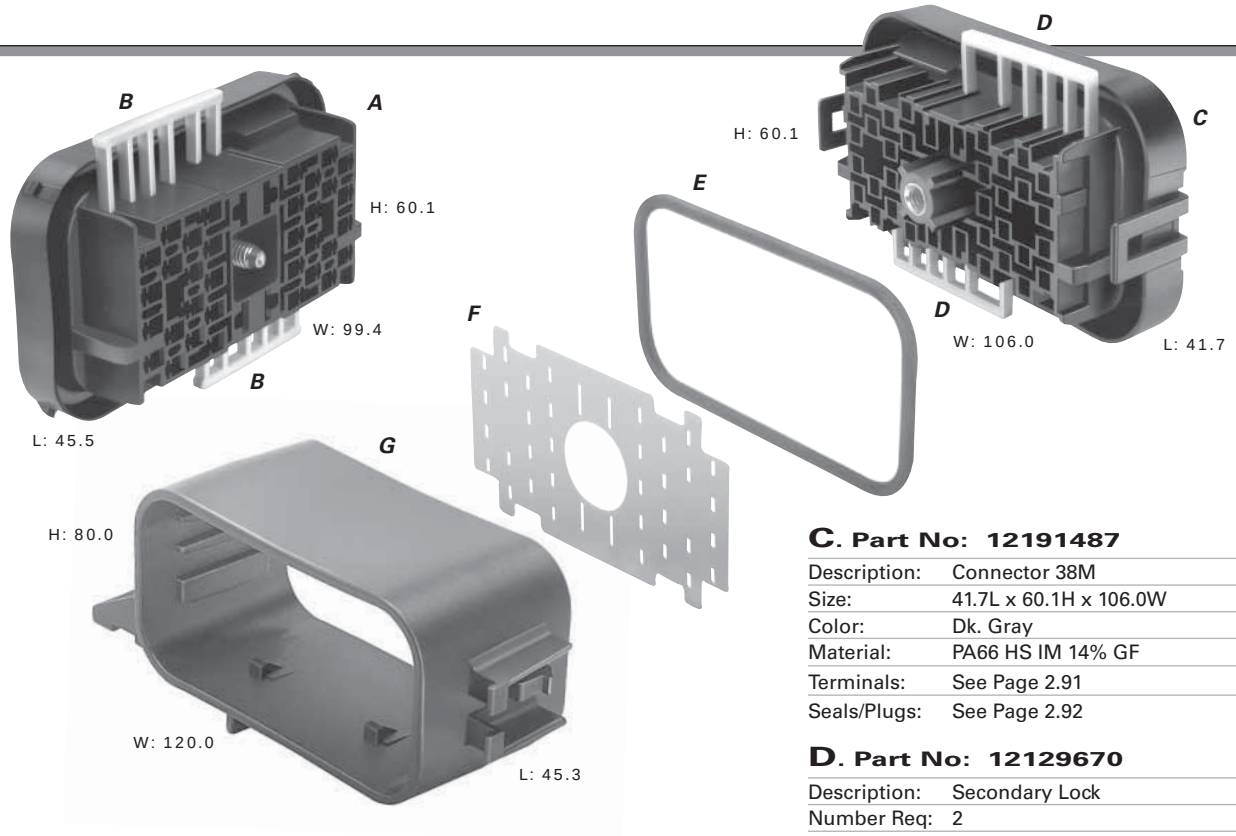

Total Mated Length: 85.3mm

A. Part No: 15492642

Description:	Connector Assembly 38F
Size:	45.5L x 60.1H x 99.4W
Color:	Black
Material:	PA66 14% GF HS IM & PA66 15% GF + MD 25% HS
Terminals:	See Page 2.90 - 280 Tangless
	See Page 2.90 - 630 Series
Seals/Plugs:	See Page 2.92

B. Part No: 12129669

Description:	Secondary Lock
Number Req:	2
Color:	Natural
Material:	PBT

C. Part No: 12191487

Description:	Connector 38M
Size:	41.7L x 60.1H x 106.0W
Color:	Dk. Gray
Material:	PA66 HS IM 14% GF
Terminals:	See Page 2.91
Seals/Plugs:	See Page 2.92

D. Part No: 12129670

Description:	Secondary Lock
Number Req:	2
Color:	Natural
Material:	PBT

E. Part No: 12129672

Description:	Connector Seal
Color:	Green
Material:	Silicone

F. Part No: 15317352

Description:	Stabilizer
Color:	Natural
Material:	Mylar

G. Part No: 12161191

Description:	Pass-Through Shroud
Size:	45.3L x 80.0H x 120.0W
Color:	Black
Material:	PBT 15% GF
Note:	Body mount shroud 12160809 is available.

KEY:

TANGLESS

■ 280 SERIES
▲ 630 SERIES

Mixed connectors feature a combination of different terminal cavities, as indicated by the key.

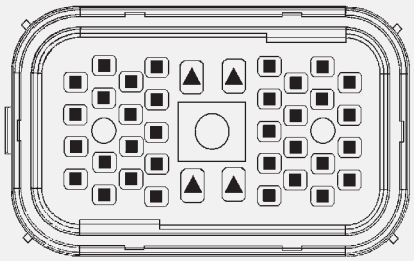

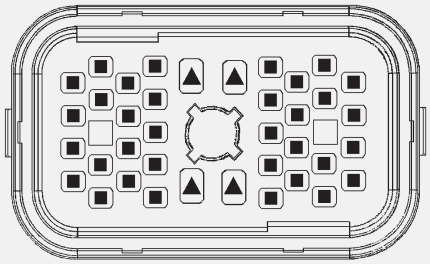

NOTE: Specifications in this catalog are for general reference only and are subject to change without notice. To verify product information, please contact a Delphi representative.

Peters de Laet
503-661-5088 – phone 503-661-5328 – fax
www.pdel.com

Junction Systems

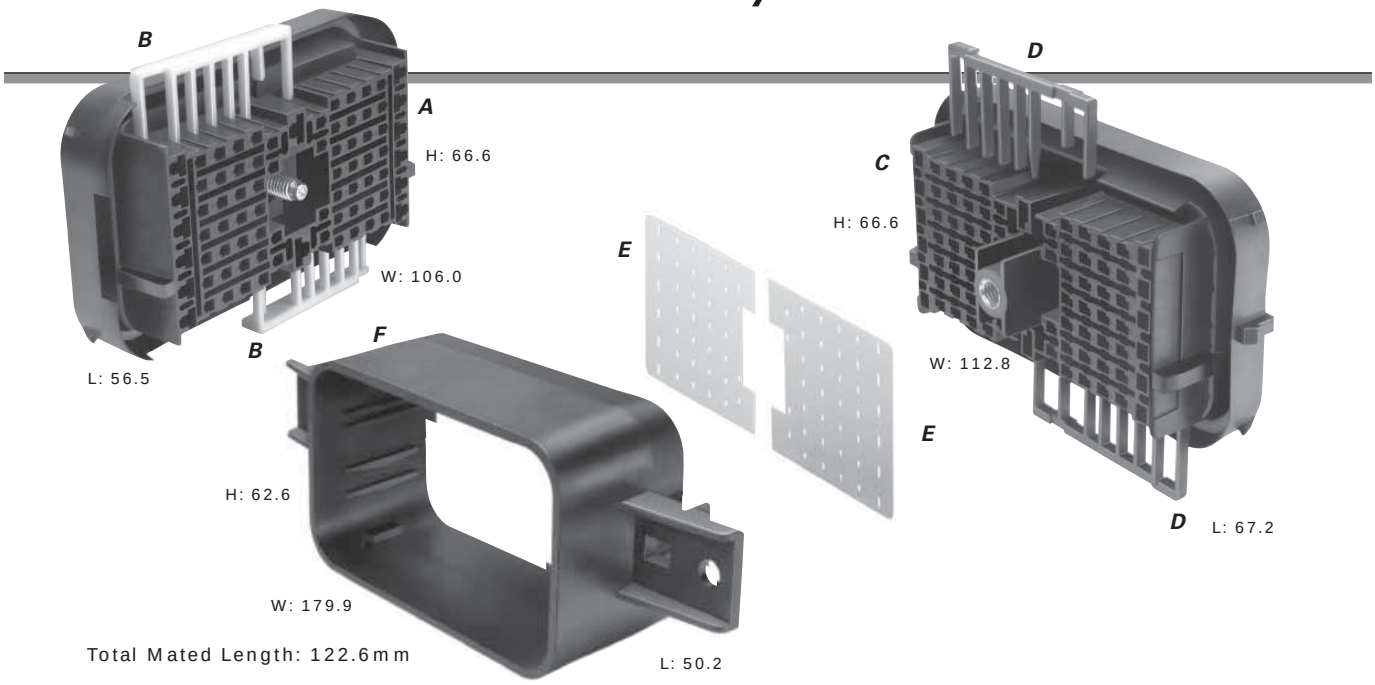

A. Part No: 15492601

Description:	Connector Assembly 78F
Size:	56.5L x 66.6H x 106.0W
Color:	Black
Material:	PA66 HS 33% GF
Terminals:	See Page 2.90
Seals/Plugs:	See Page 2.92

B. Part No: 12129214

Description:	Secondary Lock
Number Req:	2
Color:	Natural
Material:	PBT

C. Part No: 15498985

Description:	Connector Assembly 78M
Size:	67.2L x 66.6H x 112.8W
Color:	Black
Material:	PA66 HS 33% GF
Terminals:	See Page 2.91
Seals/Plugs:	See Page 2.92

D. Part No: 12129213

Description:	Secondary Lock
Number Req:	2
Color:	Blue
Material:	PBT

E. Part No: 12162573

Description:	Stabilizer
Number Req:	2
Color:	Natural
Material:	Mylar

F. Part No: 12162527

Description:	Sliding Shroud
Size:	50.2L x 62.6H x 179.9W
Color:	Black
Material:	PBT

KEY:

- ◪ 150 SERIES
- ■ 280 SERIES
- ▲ 630 SERIES

Mixed connectors feature a combination of different terminal cavities, as indicated by the key.

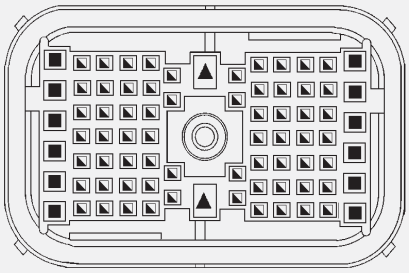

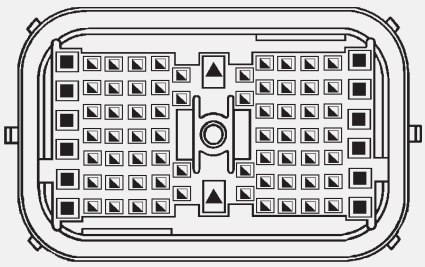

NOTE: Specifications in this catalog are for general reference only and are subject to change without notice. To verify product information, please contact a Delphi representative.

Peters de Laet
503-661-5088 – phone 503-661-5328 – fax
www.pdel.com

Header

The Metri-Pack 280 Series unsealed electronic header is a versatile, and extremely rugged system designed to meet customer's power circuit needs.

This system offers the combination of excellent low energy electronic circuits and power circuit capability in a single connection.

The Metri-Pack 150 Series sealed electronic header is a rugged system designed for severe underhood environments. This system offers the combination of excellent low energy electronic circuits and power circuit capability in a single connection.

Metri-Pack 150 Series sealed header systems are ideally suited for critical, low-energy electronic applications that require protection from environmental hazards.

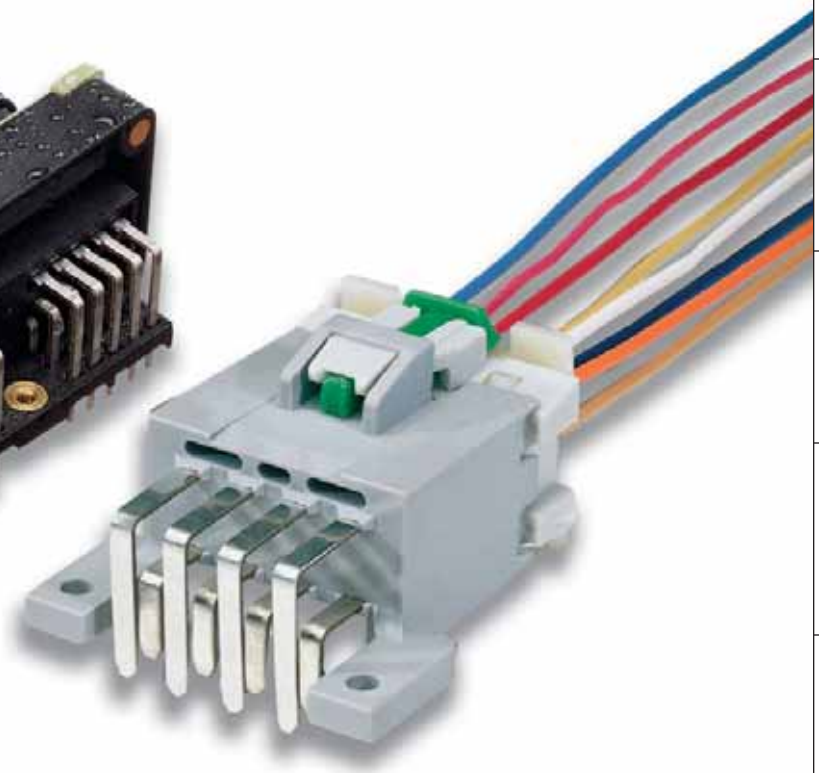

Metri-Pack Header Features

- Terminal Position Assurance (TPA)
- 14 Amps continuous maximum current rating for 150 Metri-Pack Series
- 30 Amps continuous maximum current rating for 280 Metri-Pack Series
- Low energy, low voltage capability
- Small overall dimensions
- Bolt assist connector to connector lock
- -40°C to 125°C temperature range

Peters de Laet
503-661-5088 – phone 503-661-5328 – fax
www.pdel.com

150 Header

Cross Sectional View

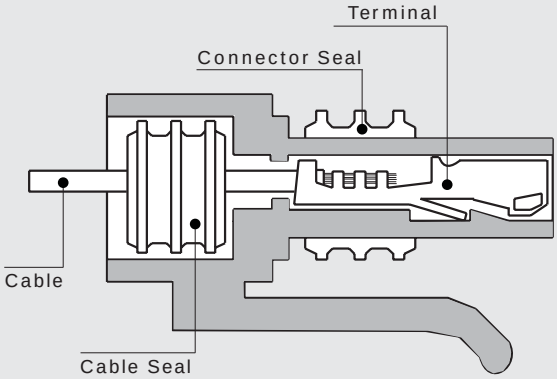

Female Connector Assembly

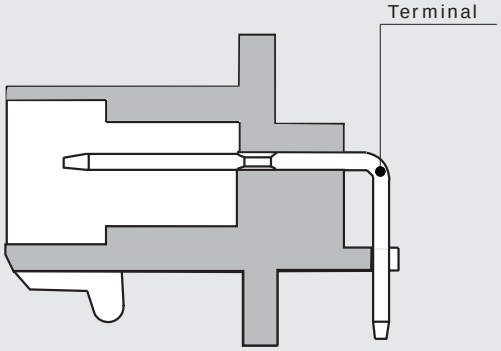

Male Header Connector Assembly

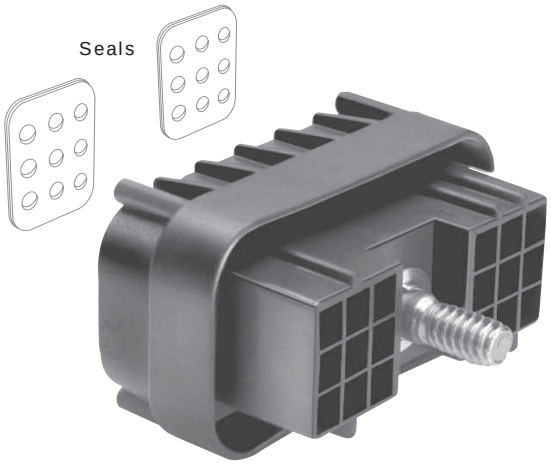

Female Connector Assembly

Female Terminal

150 Pull-to-Seat Female Terminals Sealed

Part #	Cable Range (mm²)	Material	Plating
12089290	0.50-0.35	Silicon Bronze	Tin
12103881	1.0-0.80	Silicon Bronze	Tin
12110236	1.0-0.80-0.50	Beryllium Copper	Tin

150 Metri-Pack Female Connector Assemblies Sealed*

# Cavities	Connector Assembly	Color	Material
18way: 18	15492546	Black	PBT 30% GF
30way: 30	15492553	Gray	PET 30% GF
48way: 18	15492546	Black	PBT 30% GF
: 30	15492542	Black	PET 30% GF
60way: 30	15492542	Black	PET 30% GF
: 30	15492543	Black	PET 30% GF

*Multiple cable seal is included in connector assembly.

NOTE: Specifications in this catalog are for general reference only and are subject to change without notice. To verify product information, please contact a Delphi representative.

Peters de Laet
503-661-5088 – phone 503-661-5328 – fax
www.pdel.com

150 Header

Sealed System Application Information

CABLE RANGE (mm²): 0.35-1.0

CURRENT RANGE (AMPS): 0-14

TEMP RANGE °C: ..... -40 to 125

RESISTANCE: ..... <10mΩ@20mV

VOLTAGE DROP: ..... <10mV/amp

CENTERLINE SPACING (mm): .....

..... Connector Dependent

BLADE WIDTH (mm): 1.5

150 Series Terminals – Tin Plated

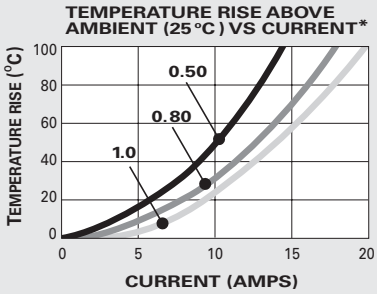

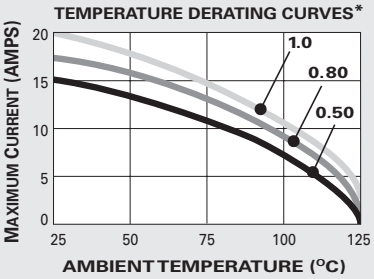

*The test data are based on single circuits in free space and were generated using a "Lumped Resistance" model. This model does not account for all of the variables that would be present in an actual application. For actual product performance, contact your regional support representative.

Male Header Connector Assembly

12065266

12034413

150 Metri-Pack Male Header Connector Assemblies Sealed

Pins	Connector	Color	Material
18	12040923	Black	PET 30% GF
30	12048453	Gray	PET 30% GF
48	12052130	Black	PET 30% GF
60	12034396	Black	PET 30% GF

Terminals Included in Male Header.

Cable Seal Plugs

Part #	Cable Seal Hole Diameter (mm)	Material	Color	Type
12065266	1.85-1.65	PA6	Md. Gray	Machine Insertion
12034413	1.85-1.10	PA6	Black	Hand Insertion

SECTION NOTES:

- Due to rigid tolerances of connector cavities, it is critical to meet all crimp dimensions as specified.
- Overall mated length varies with bolt measurement.
- Inner connector seal included in Male Header Connector Assemblies where applicable.

NOTE: Specifications in this catalog are for general reference only and are subject to change without notice. To verify product information, please contact a Delphi representative.

150 Header

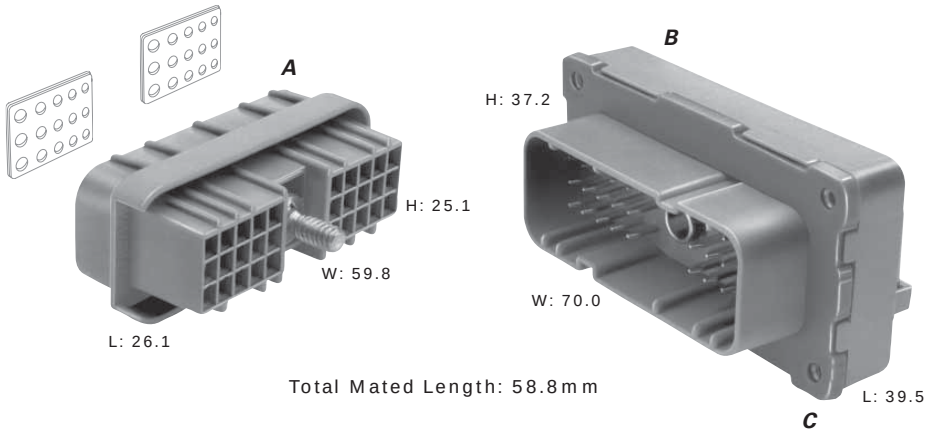

Total Mated Length: 58.8mm

A. Part No: 15492553

Description:	Connector Assembly 30F
Size:	26.1L x 25.1H x 59.8W
Color:	Gray
Material:	PET 30% GF
Terminals:	See Page 2.98, 150 Pull-To-Seat Female
Plugs:	See Page 2.99, Cable Seal Plugs

B. Part No: 12048453

Description:	Connector Assembly 30M
Size:	39.5L x 37.2H x 70.0W
Color:	Gray
Material:	PET 30% GF
Note:	Shipping cover 12040542 included.

C. Part No: 12048456

Description:	Flange Seal
Color:	Green
Material:	Silicone

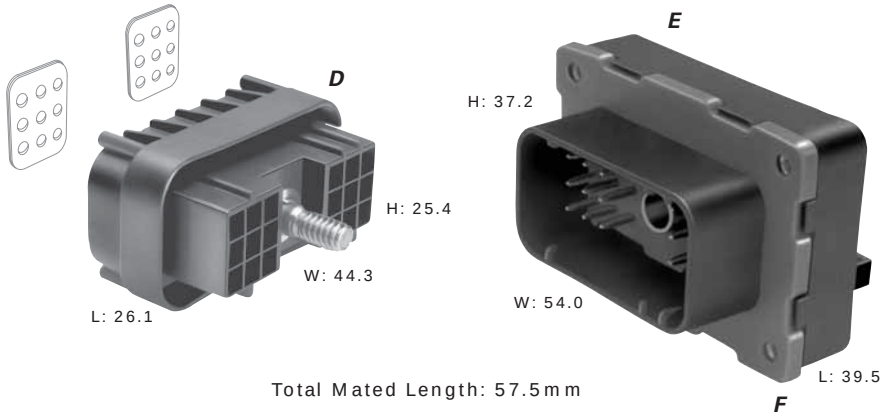

Total Mated Length: 57.5mm

D. Part No: 15492546

Description:	Connector Assembly 18F
Size:	26.1L x 25.4H x 44.3W
Color:	Black
Material:	PBT 30% GF
Terminals:	See Page 2.98, 150 Pull-To-Seat Female
Plugs:	See Page 2.99, Cable Seal Plugs

E. Part No: 12040923

Description:	Connector Assembly 18M
Size:	39.5L x 37.2H x 54.0W
Color:	Black
Material:	PET 30% GF
Note:	Shipping cover 12040940 included.

F. Part No: 12040938

Description:	Flange Seal
Color:	Green
Material:	Silicone

NOTE: Specifications in this catalog are for general reference only and are subject to change without notice. To verify product information, please contact a Delphi representative.

Peters de Laet
503-661-5088 – phone 503-661-5328 – fax
www.pdel.com

150 Header

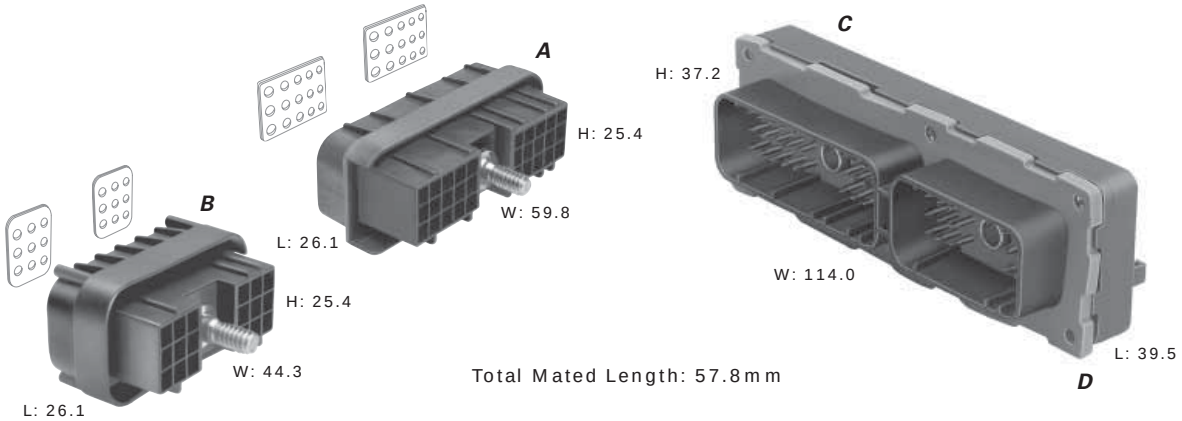

A. Part No: 15492542

Description:	Connector Assembly 30F
Size:	26.1L x 25.4H x 59.8W
Color:	Black
Material:	PET 30% GF
Terminals:	See Page 2.98, 150 Pull-To-Seat Female
Plugs:	See Page 2.99, Cable Seal Plugs

B. Part No: 15492546

Description:	Connector Assembly 18F
Size:	26.1L x 25.4H x 44.3W
Color:	Black
Material:	PBT 30% GF
Terminals:	See Page 2.98, 150 Pull-To-Seat Female
Plugs:	See Page 2.99, Cable Seal Plugs

C. Part No: 12052130

Description:	Connector Assembly 48M
Size:	39.5L x 37.2H x 114.0W
Color:	Black
Material:	PET 30% GF
Note:	Shipping covers 12040940 and 12040542 included.

D. Part No: 12052131

Description:	Flange Seal
Color:	Green
Material:	Silicone

NOTE: Specifications in this catalog are for general reference only and are subject to change without notice. To verify product information, please contact a Delphi representative.

Peters de Laet
503-661-5088 – phone 503-661-5328 – fax
www.pdel.com

150 Header

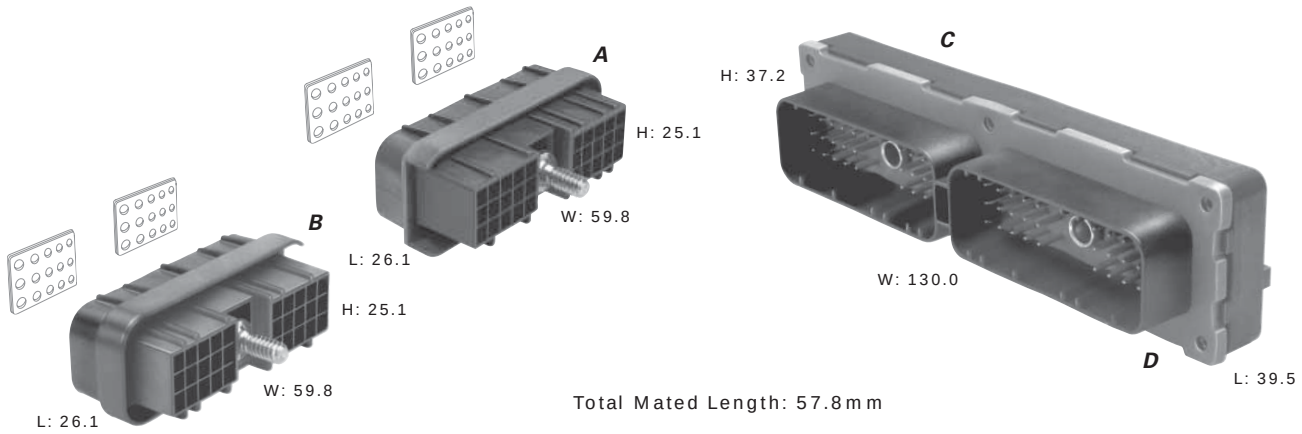

A. Part No: 15492542

Description:	Connector Assembly 30F
Size:	26.1L x 25.1H x 59.8W
Color:	Black
Material:	PET 30% GF
Terminals:	See Page 2.98, 150 Pull-To-Seat Female
Plugs:	See Page 2.99, Cable Seal Plugs

B. Part No: 15492543

Description:	Connector Assembly 30F
Size:	26.1L x 25.1H x 59.8W
Color:	Black
Material:	PET 30% GF
Terminals:	See Page 2.98, 150 Pull-To-Seat Female
Plugs:	See Page 2.99, Cable Seal Plugs

C. Part No: 12034396

Description:	Connector Assembly 60M
Size:	39.5L x 37.2H x 130.0W
Color:	Black
Material:	PET 30% GF
Note:	Shipping cover 12040542 (2 Req'd.) included

D. Part No: 12040780

Description:	Flange Seal
Color:	Green
Material:	Silicone

NOTE: Specifications in this catalog are for general reference only and are subject to change without notice. To verify product information, please contact a Delphi representative.

Peters de Laet
503-661-5088 – phone 503-661-5328 – fax
www.pdel.com

150 Header

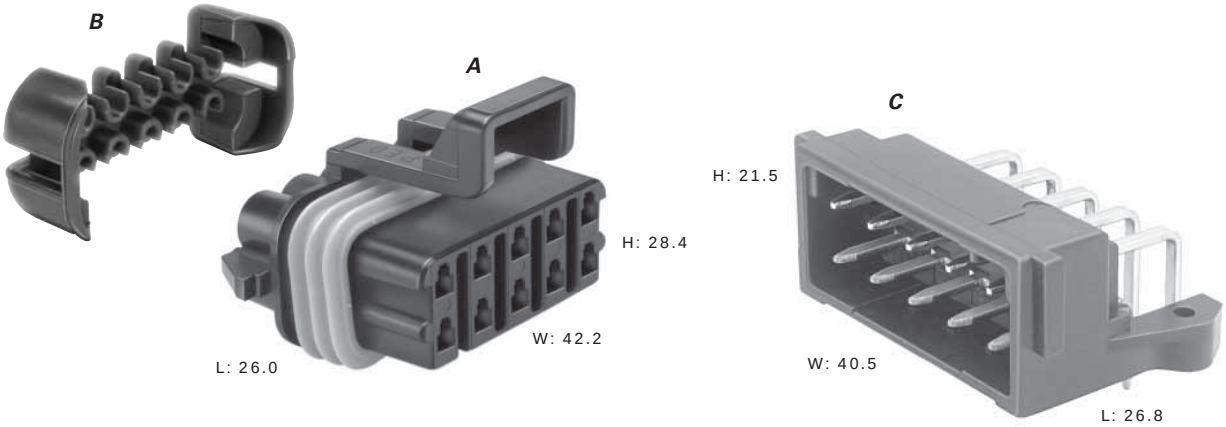

Total Mated Length: 46.7mm

A. Part No: 12065425

Description:	Connector Assembly 10F
Size:	26.0L x 28.4H x 42.2W
Color:	Black
Material:	PA66 HS IM
Terminals:	See below, 150 Female Push to Seat
Seals/Plugs:	See below, 150 Metri-Pack

B. Part No: 12177082

Description:	TPA
Color:	Md. Gray
Material:	PA66 HS IM

C. Part No: 12160446

Description:	Connector Assembly 10M
Size:	26.8L x 21.5H x 40.5W
Color:	Black
Material:	PBT 30% GF
Note:	Sealing Shroud and Locking Feature for Connector Assembly must be designed into mating device housing.

150 Female Terminals Sealed

Part #	Cable Range (mm²)	Material	Plating
12048074	1.0-0.80-0.50	Silicon Bronze	Tin
12084200	0.50-0.35	Silicon Bronze	Tin
12160223	1.0-0.80	Beryllium Copper	Silver/Nickel
12160222	0.50-0.35	Beryllium Copper	Silver/Nickel

150 Metri-Pack Cavity Plug*

Part #	Cavity Inside Diameter	Material	Color
12059168	5.2mm	Silicone	Dk. Red

*Cavity plugs seal unused female and male cavities.

150 Metri-Pack Cable Seals

Reel Part #	Loose Part #	Cable Dia.	Material	Color
12052924	15324973	2.85-2.03	Silicone	Dk. Red
12089442	15324976	2.15-1.60	Silicone	White
12052925	15324974	1.70-1.29	Silicone	Blue
12124669	15324975	1.009-0.995	Silicone	Tan

NOTE: Specifications in this catalog are for general reference only and are subject to change without notice. To verify product information, please contact a Delphi representative.

Peters de Laet
503-661-5088 – phone 503-661-5328 – fax
www.pdel.com

280 Header

Cross Sectional View

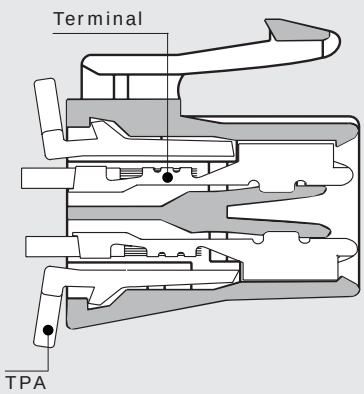

Female Connector

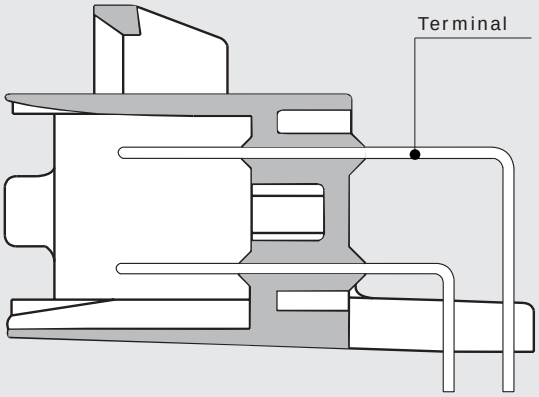

Male Header Connector Assembly

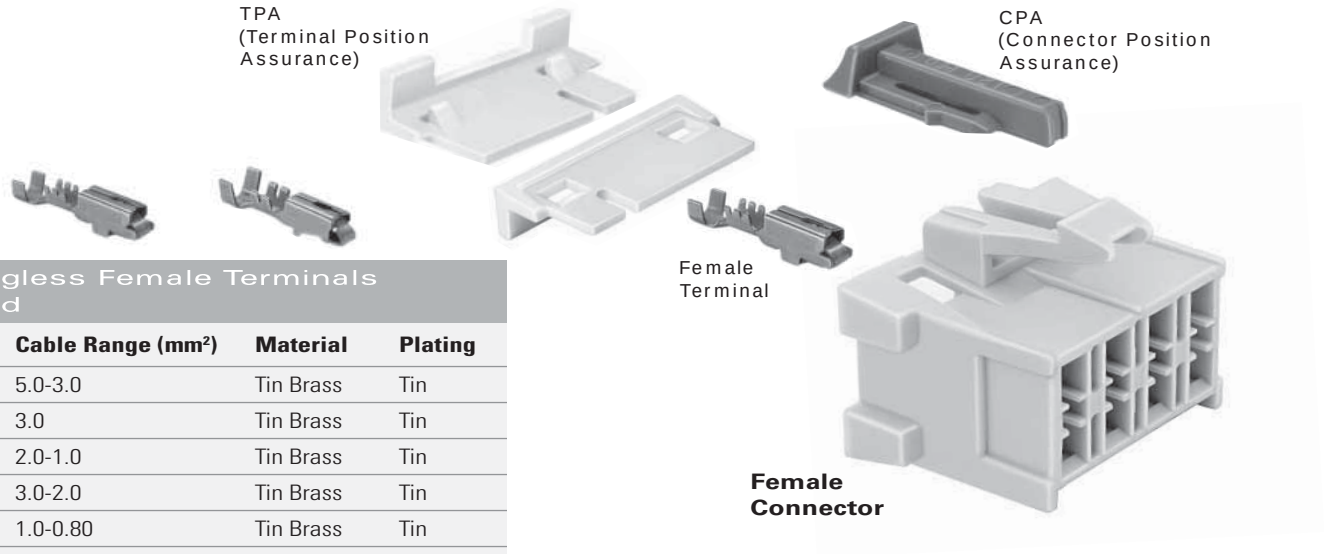

TANGLESS

280 Tangless Female Terminals Unsealed

Part #	Cable Range (mm²)	Material	Plating
12129425	5.0-3.0	Tin Brass	Tin
12129663	3.0	Tin Brass	Tin
12129424	2.0-1.0	Tin Brass	Tin
12110842*	3.0-2.0	Tin Brass	Tin
12110844*	1.0-0.80	Tin Brass	Tin
12110843*	0.50-0.35	Tin Brass	Tin
12129061*	2.0-0.35	Tin Brass	Tin

***Thin Stock**—Electrical current restrictions apply.

280 Female Terminals Unsealed

Part #	Cable Range (mm²)	Material	Plating
12015858	5.0-3.0	Tin Brass	Tin
12129494	3.0-2.0	Tin Brass	Tin
12034046	0.80-0.50	Tin Brass	Tin
12052217	0.50-0.35	Tin Brass	Tin
12162597*	3.0-2.0	Tin Brass	Tin
12162595*	1.0-0.80	Tin Brass	Tin
12162596*	0.50-0.35	Tin Brass	Tin

***Thin Stock**—Electrical current restrictions apply.

280 Metri-Pack Female Connector Unsealed

# Cavities	Connector	Color	Material	TPA
4	12052856	Black	PA66 HS IM	15324456

TANGLESS

280 Metri-Pack Flexlock Female Connector Unsealed

# Cavities	Connector	Color	Material	TPA
8	12110626†	Lt. Gray	PA66 HS IM	15324332

† Use p/n 15357040 to mate to audio amplifiers.

NOTE: Specifications in this catalog are for general reference only and are subject to change without notice. To verify product information, please contact a Delphi representative.

Peters de Laet
503-661-5088 – phone 503-661-5328 – fax
www.pdel.com

280 Header

Unsealed System Application Information

CABLE RANGE (mm²): 0.35-5.0

CURRENT RANGE (AMPS): 0-30

TEMP RANGE °C: ..... -40 to 125

RESISTANCE: ..... <10mΩ@20mV

VOLTAGE DROP: ..... <3.0mV/amp

CENTERLINE SPACING (mm): 6.9

BLADE WIDTH (mm): 2.8

280 Series Terminals – Tin Plated

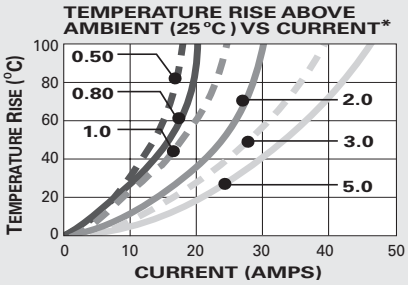

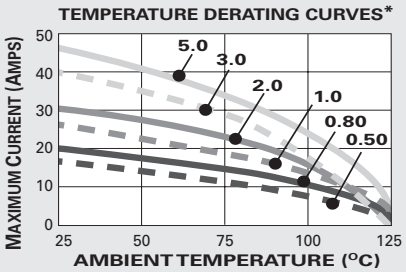

*The test data are based on single circuits in free space and were generated using a "Lumped Resistance" model. This model does not account for all of the variables that would be present in an actual application. For actual product performance, contact your regional support representative.

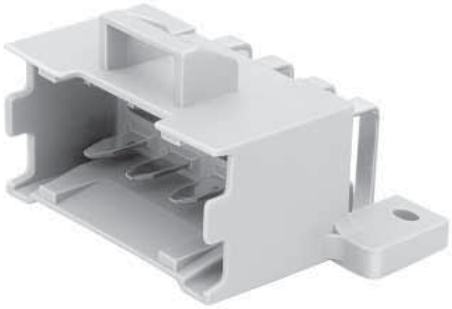

Male Header Connector Assembly

280 Metri-Pack Male Header Connector Assembly Unsealed			
Pins	**Connector**	**Color**	**Material**
4	12110440	Black	PA66 HS IM

TANGLESS

280 Metri-Pack Male Header Connector Assembly Unsealed			
Pins	**Connector**	**Color**	**Material**
8	12146724	Gray	PBT 30% GF

SECTION NOTES:

- Due to rigid tolerances of connector cavities, it is critical to meet all crimp dimensions as specified.

NOTE: Specifications in this catalog are for general reference only and are subject to change without notice. To verify product information, please contact a Delphi representative.

Peters de Laet
503-661-5088 – phone 503-661-5828 – fax
www.pdel.com

280 Header

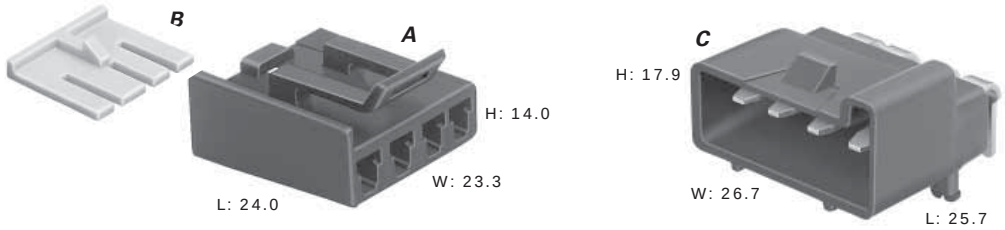

Total Mated Length: 40.4mm

A. Part No: 12052856

Description:	Connector 4F
Size:	24.0L x 14.0H x 23.3W
Color:	Black
Material:	PA66 HS IM
Terminals:	See Page 2.104, 280 Female

B. Part No: 15324456

Description:	TPA
Color:	Dk. Green
Material:	PA66 HS IM

C. Part No: 12110440

Description:	Connector 4M
Size:	25.7L x 17.9H x 26.7W
Color:	Black
Material:	PA66 HS IM

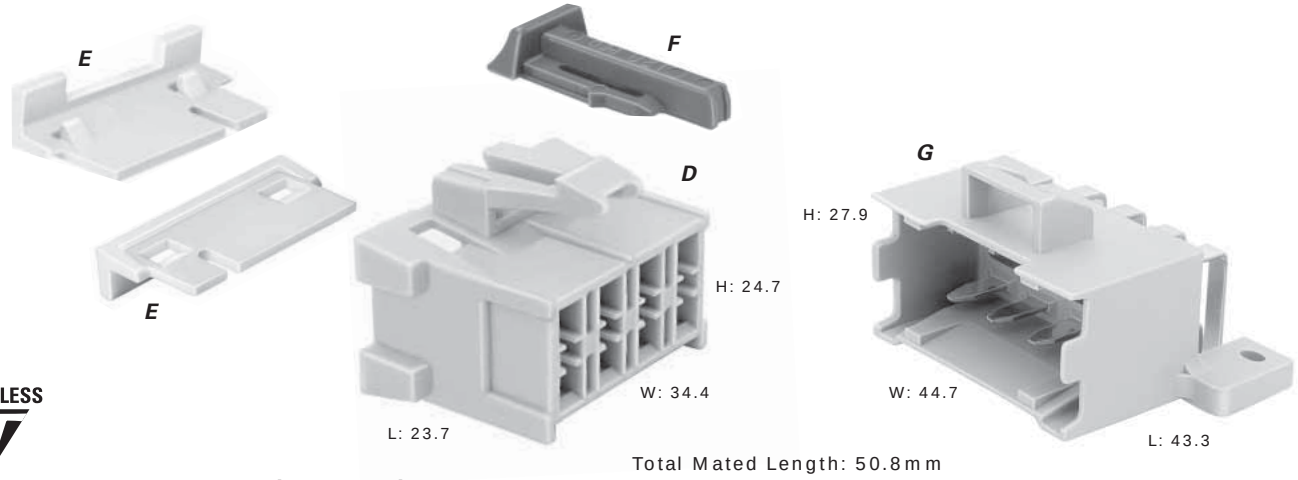

TANGLESS

Total Mated Length: 50.8mm

D. Part No: 12110626† (Lt. Gray)
12129088 (Black)

Description:	Connector 8F
Size:	23.7L x 24.7H x 34.4W
Material:	PA66 HS IM
Terminals:	See Page 2.104, 280 Tangless Female

E. Part No: 15324332

Description:	TPA
Number Req:	2
Color:	Natural
Material:	PA66 HS IM

F. Part No: 12052834

Description:	CPA
Color:	Green
Material:	PP

G. Part No: 12146724 (Gray)
12146735 (Black)

Description:	Connector 8M
Size:	43.3L x 27.9H x 44.7W
Material:	PBT 30% GF

† Use p/n 15357040 to mate to audio amplifiers.

NOTE: Specifications in this catalog are for general reference only and are subject to change without notice. To verify product information, please contact a Delphi representative.

Peters de Laet
503-661-5088 – phone 503-661-5328 – fax
www.pdel.com

100 In-Line, 100 Header & 100W Header

Available in electronic header and in-line connections, Micro-Pack Series connector is an excellent low energy system designed to meet the needs of high density applications.

Header connectors are available in straight, 90°, and 180° mounting to either flexible or hard board circuits. While inlines are ideally suited for limited space applications that do not require environmental protection, Micro-Pack Series products are extremely versatile.

The 100W Series is available in both electronic header and in-line connection systems. This Micro-Pack Series connection is an excellent low energy system designed to meet the needs of high density applications, requiring protection from environmental hazards. Delphi's 100W header connector mates to either flexible or hard circuit board applications.

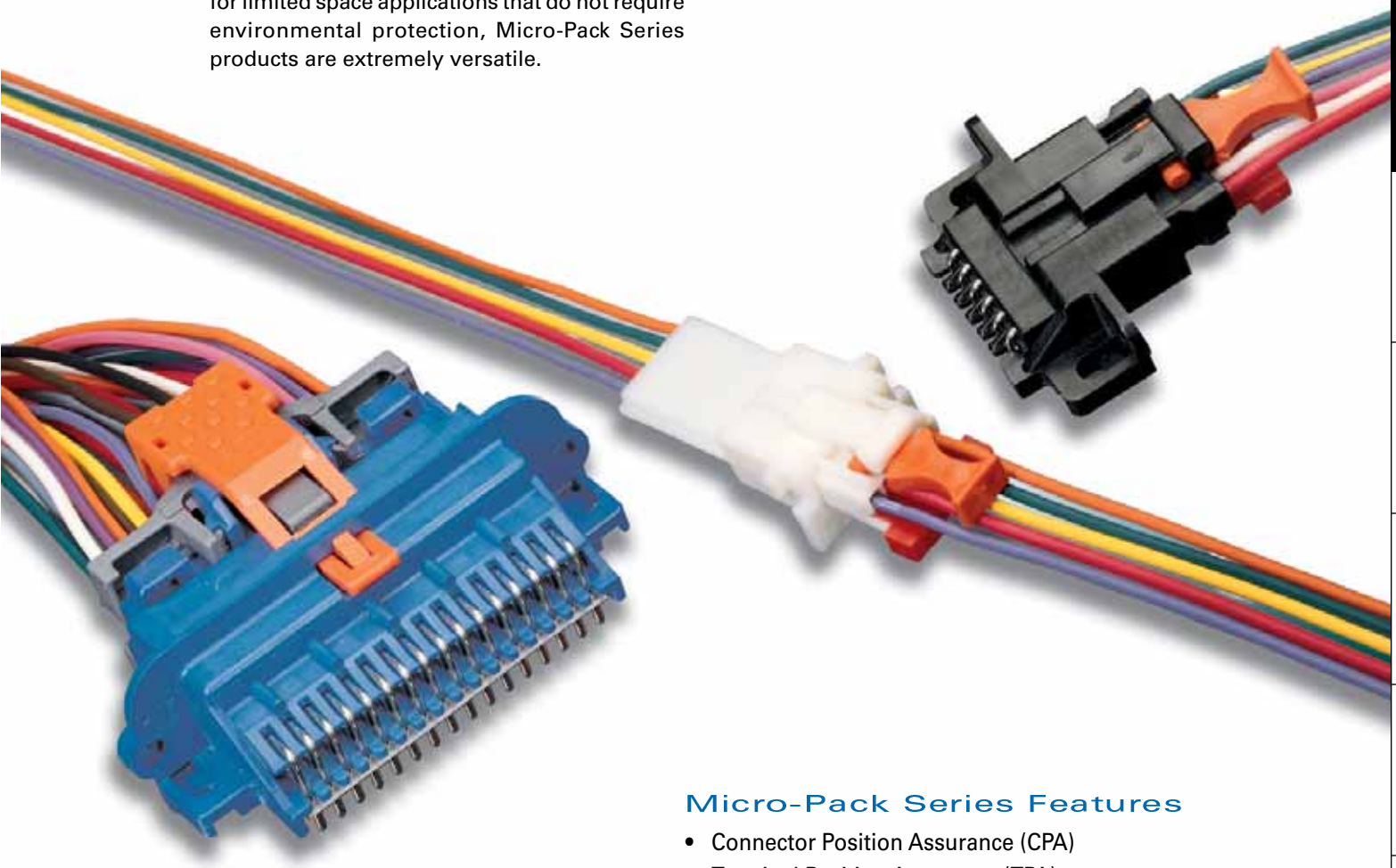

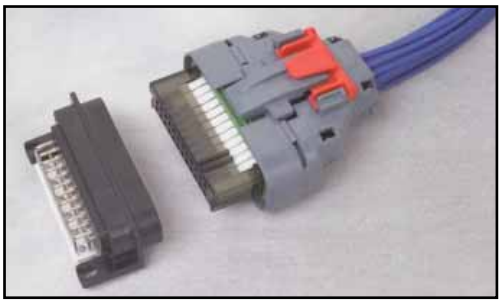

Micro-Pack Series Features

- Connector Position Assurance (CPA)
- Terminal Position Assurance (TPA)
- 5 Amps continuous maximum current rating for Micro-Pack 100 Series
- 7.5 Amps continuous maximum current rating for Micro-Pack 100W Series
- Small overall dimensions
- High circuit density
- Low energy, low voltage capability
- -40°C to 85°C temperature range for Micro-Pack 100 Series
- -40°C to 125°C temperature range for Micro-Pack 100W Series

100 In-Line

Cross Sectional View

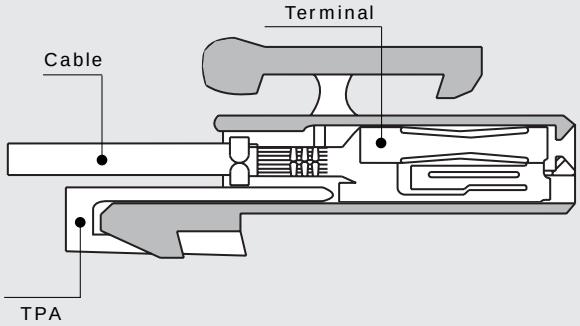

Female Connector

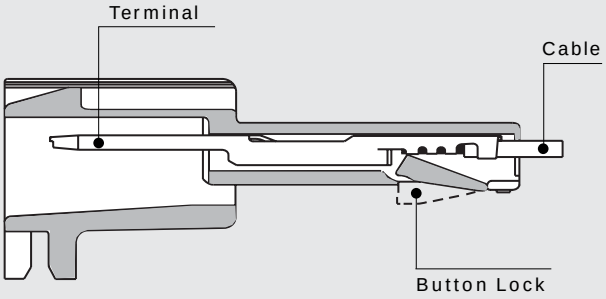

Male Connector

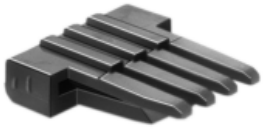

TPA
(Terminal Position
Assurance)

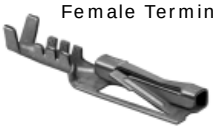

Female Terminal

CPA
(Connector Position
Assurance)

Female Connector

Micro-Pack Female Terminals Unsealed

Part #	Cable Range (mm²)	Material	Plating
12146448	1.0-0.80	Copper Nickel Alloy	Tin
12146447	0.50-0.35	Copper Nickel Alloy	Tin

Micro-Pack Female Connectors Unsealed

# Cavities	Connector	Color	Material	TPA
4	12066189	Natural	PBT	12059160
5	12064982	Black	PBT	12064987
7	12065873	Black	PBT	12065943
9	12064980	Black	PBT	12064986
10	12047531	Black	PA66 HS IM	Button Lock

NOTE: Specifications in this catalog are for general reference only and are subject to change without notice. To verify product information, please contact a Delphi representative.

Peters de Laet
503-661-5088 – phone 503-661-5328 – fax
www.pdel.com

100 In-Line

Unsealed System Application Information

CABLE RANGE (mm²): 0.35-1.0

CURRENT RANGE (AMPS): 0-5

TEMP RANGE °C: ..... -40 to 85

RESISTANCE: ..... <10mΩ@20mV

VOLTAGE DROP: .... <10.0mV/amp

CENTERLINE SPACING (mm): 3.0

TERMINAL DIAMETER (mm): 1.0

Micro-Pack 100 Terminals – Tin Plated

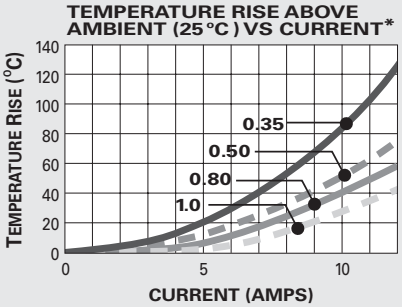

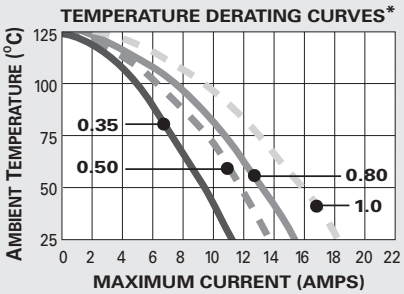

*The test data are based on single circuits in free space and were generated using a "Lumped Resistance" model. This model does not account for all of the variables that would be present in an actual application. For actual product performance, contact your regional support representative.

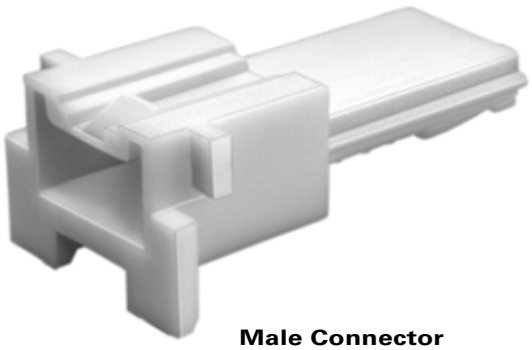

Male Connector

Male Terminal

Micro-Pack Male Connectors Unsealed

# Cavities	Connector	Color	Material	TPA
4	12040903	Natural	PBT	Button Lock
5	12047829	Black	PBT	Button Lock
7	12065874	Black	PBT	Button Lock
9	12040905	Black	PBT	Button Lock
10	12047814	Black	PBT	Button Lock

Micro-Pack Male Terminals Unsealed

Part #	Cable Range (mm²)	Material	Plating
12084449	0.80-0.50	Tin Brass	Tin
12040902	0.35	Tin Brass	Tin

SECTION NOTES:

- Due to rigid tolerances of connector cavities, it is critical to meet all crimp dimensions as specified.

NOTE: Specifications in this catalog are for general reference only and are subject to change without notice. To verify product information, please contact a Delphi representative.

Peters de Laet
503-661-5088 – phone 503-661-5328 – fax
www.pdel.com

100 In-Line

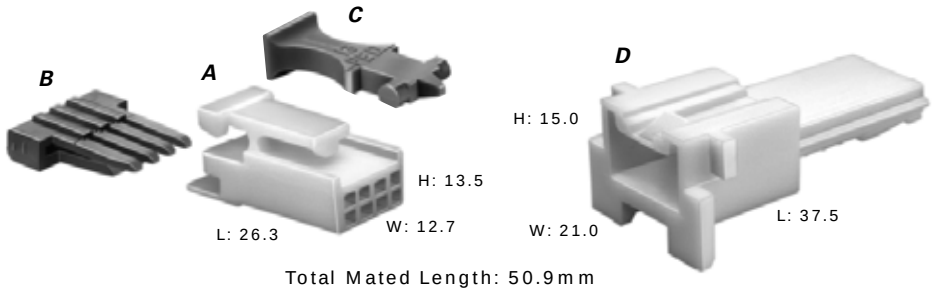

Total Mated Length: 50.9mm

A. Part No: 12066189

Description:	Connector 4F
Size:	26.3L x 13.5H x 12.7W
Color:	Natural
Material:	PBT
Terminals:	See Page 3.2

B. Part No: 12059160

Description:	TPA
Color:	Red
Material:	PA6

C. Part No: 12064989

Description:	CPA
Color:	Orange
Material:	PP IM

D. Part No: 12040903

Description:	Connector 4M - with Button Lock
Size:	37.5L x 15.0H x 21.0W
Color:	Natural
Material:	PBT
Terminals:	See Page 3.3

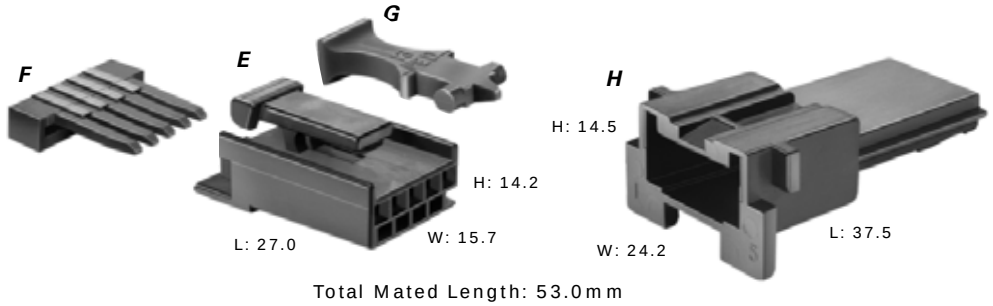

Total Mated Length: 53.0mm

E. Part No: 12064982 (Black)
12064983 (Natural)

Description:	Connector 5F
Size:	27.0L x 14.2H x 15.7W
Material:	PBT
Terminals:	See Page 3.2

F. Part No: 12064987

Description:	TPA
Color:	Red
Material:	PA6

G. Part No: 12064989

Description:	CPA
Color:	Orange
Material:	PP IM

H. Part No: 12047829 (Black)
12047815 (Natural)

Description:	Connector 5M - with Button Lock
Size:	37.5L x 14.5H x 24.2W
Material:	PBT
Terminals:	See Page 3.3

NOTE: Specifications in this catalog are for general reference only and are subject to change without notice. To verify product information, please contact a Delphi representative.

Peters de Laet
503-661-5088 – phone 503-661-5328 – fax
www.pdel.com

100 In-Line

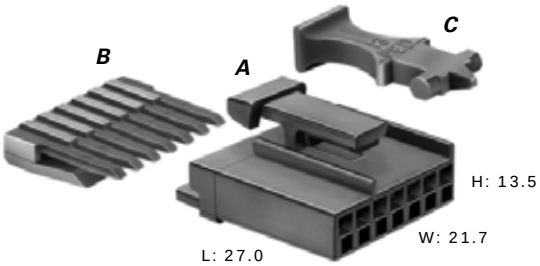

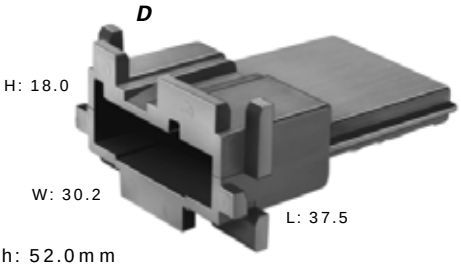

Total Mated Length: 52.0mm

A. Part No: 12065873

Description:	Connector 7F
Size:	27.0L x 13.5H x 21.7W
Color:	Black
Material:	PBT
Terminals:	See Page 3.2

B. Part No: 12065943

Description:	TPA
Color:	Red
Material:	PA6

C. Part No: 12064989

Description:	CPA
Color:	Orange
Material:	PP IM

D. Part No: 12065874

Description:	Connector 7M - with Button Lock
Size:	37.5L x 18.0H x 30.2W
Color:	Black
Material:	PBT
Terminals:	See Page 3.3

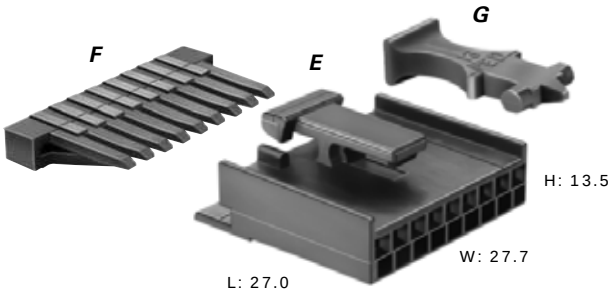

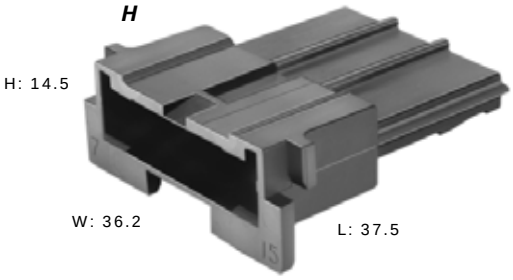

Total Mated Length: 52.0mm

E. Part No: 12064980

Description:	Connector 9F
Size:	27.0L x 13.5H x 27.7W
Color:	Black
Material:	PBT
Terminals:	See Page 3.2

F. Part No: 12064986

Description:	TPA
Color:	Red
Material:	PA66 HS IM

G. Part No: 12064989

Description:	CPA
Color:	Orange
Material:	PP IM

H. Part No: 12040905

Description:	Connector 9M - with Button Lock
Size:	37.5L x 14.5H x 36.2W
Color:	Black
Material:	PBT
Terminals:	See Page 3.3

NOTE: Specifications in this catalog are for general reference only and are subject to change without notice. To verify product information, please contact a Delphi representative.

Peters de Laet
503-661-5088 – phone 503-667-5328 – fax
www.pdel.com

100 In-Line

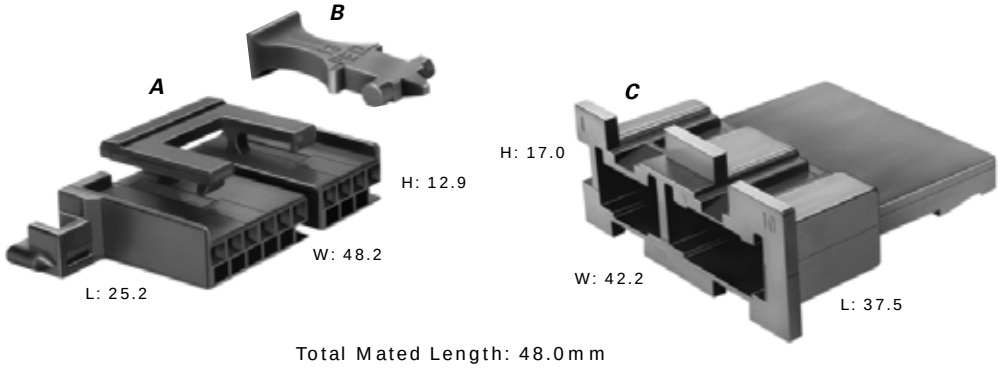

Total Mated Length: 48.0mm

A. Part No: 12047531

Description:	Connector 10F - with Button Lock
Size:	25.2L x 12.9H x 48.2W
Color:	Black
Material:	PA66 HS IM
Terminals:	See Page 3.2

B. Part No: 12064989

Description:	CPA
Color:	Orange
Material:	PP IM

C. Part No: 12047814

Description:	Connector 10M - with Button Lock
Size:	37.5L x 17.0H x 42.2W
Color:	Black
Material:	PBT
Terminals:	See Page 3.3

NOTE: Specifications in this catalog are for general reference only and are subject to change without notice. To verify product information, please contact a Delphi representative.

Peters de Laet
503-661-5088 – phone 503-661-5328 – fax
www.pdel.com

Peters de Laet
503-661-5088 – phone 503-661-5328 – fax
www.pdel.com

100 Header

Cross Sectional View

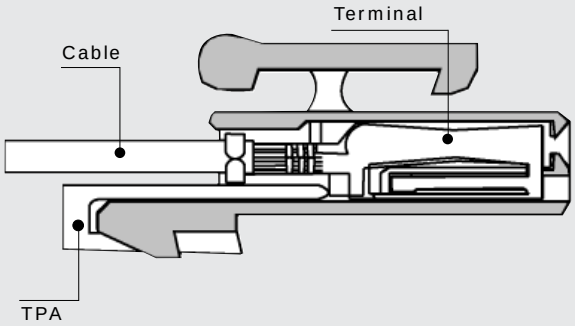

Female Connector

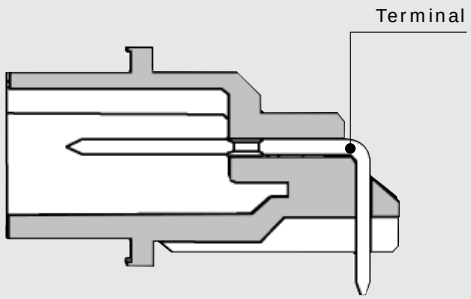

Male Header Connector Assembly

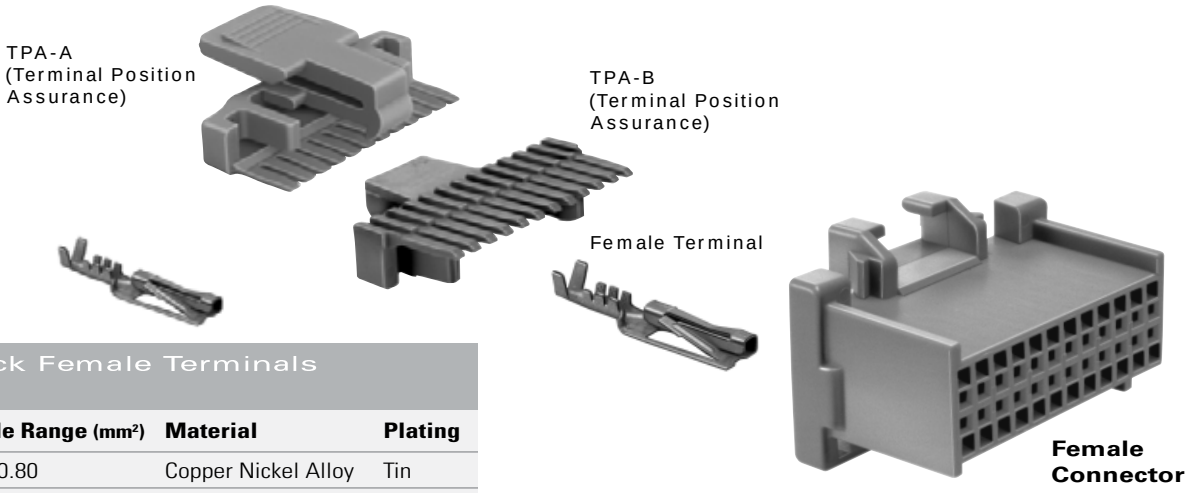

Micro-Pack Female Terminals Unsealed

Part #	Cable Range (mm²)	Material	Plating
12146448	1.0-0.80	Copper Nickel Alloy	Tin
12146447	0.50-0.35	Copper Nickel Alloy	Tin

Nickel/Gold plating available.

Micro-Pack Female Connectors Unsealed

# Cavities	Connector	Color	Material	TPA-A	TPA-B
6way: 6	12064993	Black	PBT	12066170	–
10way: 4	12066189	Natural	PBT	12059160	–
6	12064993	Black	PBT	12066170	–
12way: 12	12064799	Black	PBT 30% GF	12064822	12064823
13way: 4	12066189	Natural	PBT	12059160	–
9	12066130	Natural	PBT	12064986	–
16way: 16	12110259	Green	PBT 30% GF	12048344	12048345
20way: 10	12047531	Black	PA66 HS IM	Button Lock	–
10	12065785	Lt. Gray	PA66 HS IM	Button Lock	–
24way: 24	12110088	Gray	PBT 30% GF	12047900	12047901
32way: 32	12110113	Dk. Red	PBT 30% GF	12045889	12045890
32way: 32	12110207	Lt. Blue	PBT 30% GF	12045889	12045890
40way: 16	12084945	Gray	PBT 30% GF	12048344	12048345
24	12110088	Gray	PBT 30% GF	12047900	12047901
48way: 24	12110244	Pink	PBT 30% GF	12047900	12047901
24	12110206	Lt. Blue	PBT 30% GF	12047900	12047901
56way: 24	12110206	Lt. Blue	PBT 30% GF	12047900	12047901
32	12110207	Lt. Blue	PBT 30% GF	12045889	12045890
64way: 16	12084945	Gray	PBT 30% GF	12048344	12048345
24	12110088	Gray	PBT 30% GF	12047900	12047901
24	12110244	Pink	PBT 30% GF	12047900	12047901
Mixed					
32way: 8	12110626†	Lt. Gray	PA66 HS IM	15324332	–
24	12110088	Gray	PBT 30% GF	12047900	12047901

† Use p/n 15357040 to mate to audio amplifiers.

NOTE: Specifications in this catalog are for general reference only and are subject to change without notice. To verify product information, please contact a Delphi representative.

Peters de Laet
503-661-5088 – phone 503-661-5328 – fax
www.pdel.com

100 Header

Unsealed System Application Information

CABLE RANGE (mm²): 0.35-1.0

CURRENT RANGE (AMPS): 0-5

TEMP RANGE °C: ..... -40 to 85

RESISTANCE: ..... <10mΩ@20mV

VOLTAGE DROP: .... <10.0mV/amp

CENTERLINE SPACING (mm): 3.0

TERMINAL DIAMETER (mm): 1.0

Micro-Pack 100 Terminals – Tin Plated

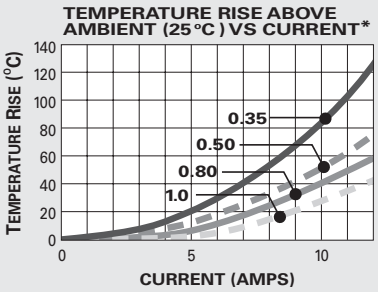

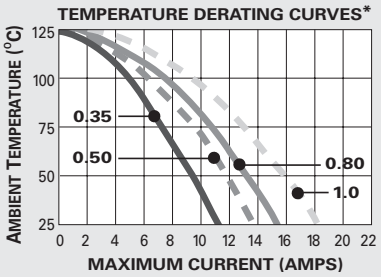

*The test data are based on single circuits in free space and were generated using a "Lumped Resistance" model. This model does not account for all of the variables that would be present in an actual application. For actual product performance, contact your regional support representative.

CPA
(Connector Position Assurance)

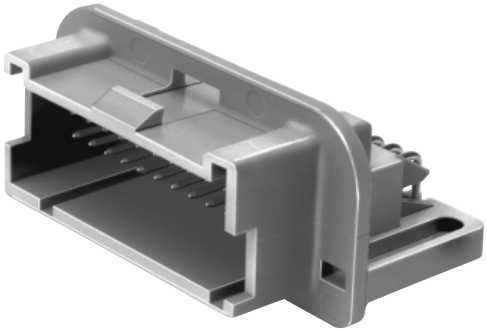

Male Header Connector Assembly

SECTION NOTES:

- Due to rigid tolerances of connector cavities, it is critical to meet all crimp dimensions as specified.
- Different color and connector indexing features are also available.
- Low profile and right angle TPAs also available.

Micro-Pack Male Header Connector Assemblies Unsealed

# Pins	Connector	Color	Material
6	12065870	Black	PBT 30% GF
10	12065647	Black	PBT 30% GF
12	12064798	Black	PBT 30% GF
13	12066307	Black	PBT 30% GF
16	12110261	Green	PBT 30% GF
20*	12089852	Black	PBT 30% GF
24	12092886	Gray	PBT 30% GF

# Pins	Connector	Color	Material
32*	12129340	Dk. Red	PBT 30% GF
32*	12110323	Lt. Blue	PBT 30% GF
40	12191050	Gray	PBT 30% GF
48	12191140	Natural	PBT 30% GF
56*	12110209	Lt. Blue	PBT 30% GF
64	12160861	Black	PBT 30% GF
Mixed			
32	15357042	Gray	PBT 30% GF

Terminals included in connector assembly.
* Gold plating available.

NOTE: Specifications in this catalog are for general reference only and are subject to change without notice. To verify product information, please contact a Delphi representative.

Peters de Laet
503-661-5088 – phone 503-667-5328 – fax
www.pdel.com

100 Header

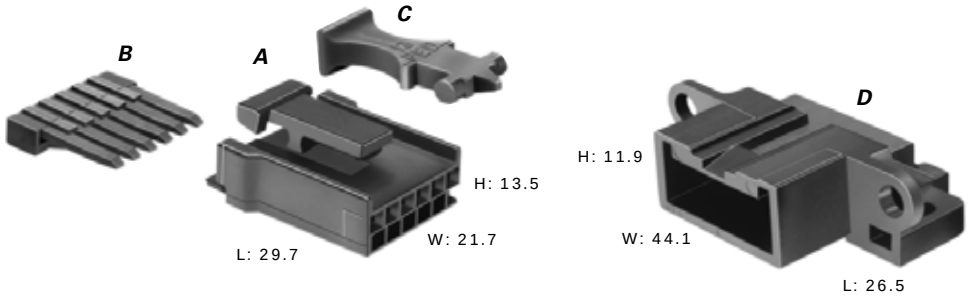

Total Mated Length: 49.7mm

A. Part No: 12064993

Description:	Connector 6F
Size:	29.7L x 13.5H x 21.7W
Color:	Black
Material:	PBT
Terminals:	See Page 3.8

B. Part No: 12066170

Description:	TPA
Color:	Red
Material:	PA6

C. Part No: 12064989

Description:	CPA
Color:	Orange
Material:	PP IM

D. Part No: 12065870

Description:	Connector Assembly 6M
Size:	26.5L x 11.9H x 44.1W
Color:	Black
Material:	PBT 30% GF

NOTE: Specifications in this catalog are for general reference only and are subject to change without notice. To verify product information, please contact a Delphi representative.

Peters de Laet
503-661-5088 – phone 503-661-5328 – fax
www.pdel.com

100 Header

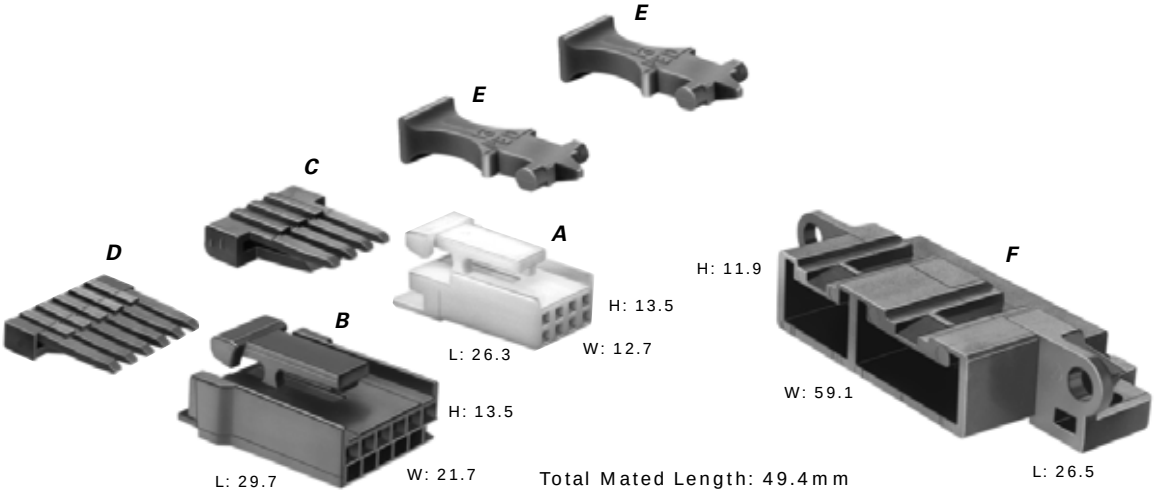

A. Part No: 12066189

Description:	Connector 4F
Size:	26.3L x 13.5H x 12.7W
Color:	Natural
Material:	PBT
Terminals:	See Page 3.8

B. Part No: 12064993

Description:	Connector 6F
Size:	29.7L x 13.5H x 21.7W
Color:	Black
Material:	PBT
Terminals:	See Page 3.8

C. Part No: 12059160

Description:	TPA
Color:	Red
Material:	PA6

D. Part No: 12066170

Description:	TPA
Color:	Red
Material:	PA6

E. Part No: 12064989

Description:	CPA
Number Req:	2
Color:	Orange
Material:	PP IM

F. Part No: 12065647

Description:	Connector Assembly 10M
Size:	26.5L x 11.9H x 59.1W
Color:	Black
Material:	PBT 30% GF

NOTE: Specifications in this catalog are for general reference only and are subject to change without notice. To verify product information, please contact a Delphi representative.

Peters de Laet
503-661-5088 – phone 503-661-5328 – fax
www.pdel.com

100 Header

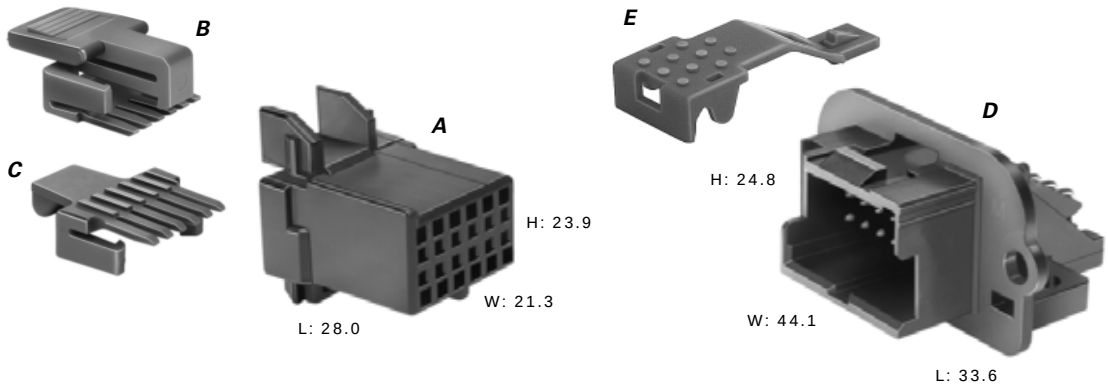

Total Mated Length: 39.1mm

A. Part No: 12064799

Description:	Connector 12F
Size:	28.0L x 23.9H x 21.3W
Color:	Black
Material:	PBT 30% GF
Terminals:	See Page 3.8

B. Part No: 12064822

Description:	TPA
Color:	Md. Gray
Material:	PA66 HS IM

C. Part No: 12064823

Description:	TPA
Color:	Md. Gray
Material:	PA66 HS IM

D. Part No: 12064798

Description:	Connector Assembly 12M
Size:	33.6L x 24.8H x 44.1W
Color:	Black
Material:	PBT 30% GF

E. Part No: 12077899

Description:	CPA
Color:	Orange
Material:	PP IM

NOTE: Specifications in this catalog are for general reference only and are subject to change without notice. To verify product information, please contact a Delphi representative.

Peters de Laet
503-661-5088 – phone 503-661-5328 – fax
www.pdel.com

100 Header

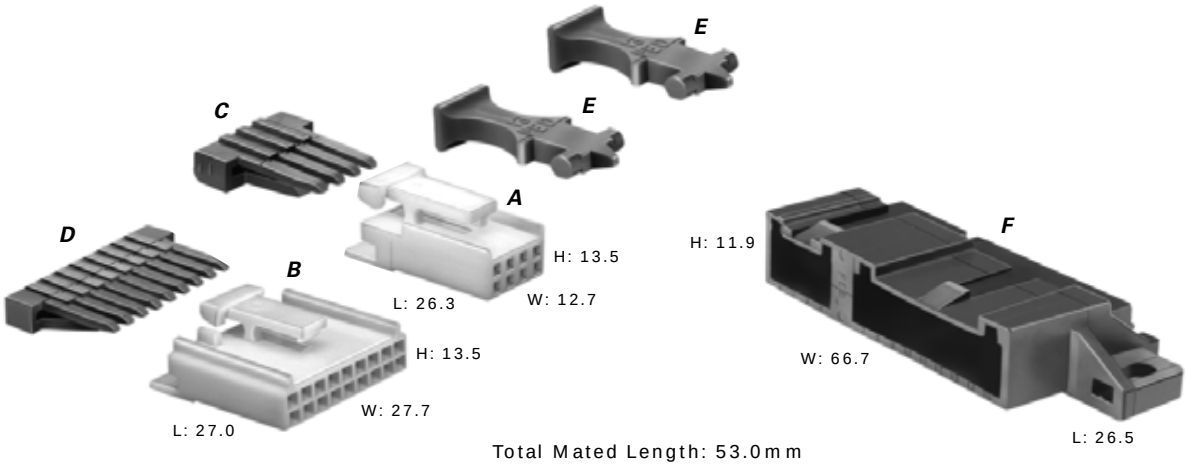

A. Part No: 12066189

Description:	Connector 4F
Size:	26.3L x 13.5H x 12.7W
Color:	Natural
Material:	PBT
Terminal:	See Page 3.8

B. Part No: 12066130

Description:	Connector 9F
Size:	27.0L x 13.5H x 27.7W
Color:	Natural
Material:	PBT
Terminals:	See Page 3.8

C. Part No: 12059160

Description:	TPA
Color:	Red
Material:	PA6

D. Part No: 12064986

Description:	TPA
Color:	Red
Material:	PA66 HS IM

E. Part No: 12064989

Description:	CPA
Number Req:	2
Color:	Orange
Material:	PP IM

F. Part No: 12066307

Description:	Connector Assembly 13M
Size:	26.5L x 11.9H x 66.7W
Color:	Black
Material:	PBT 30% GF

NOTE: Specifications in this catalog are for general reference only and are subject to change without notice. To verify product information, please contact a Delphi representative.

Peters de Laet
503-661-5088 – phone 503-661-5328 – fax
www.pdel.com

100 Header

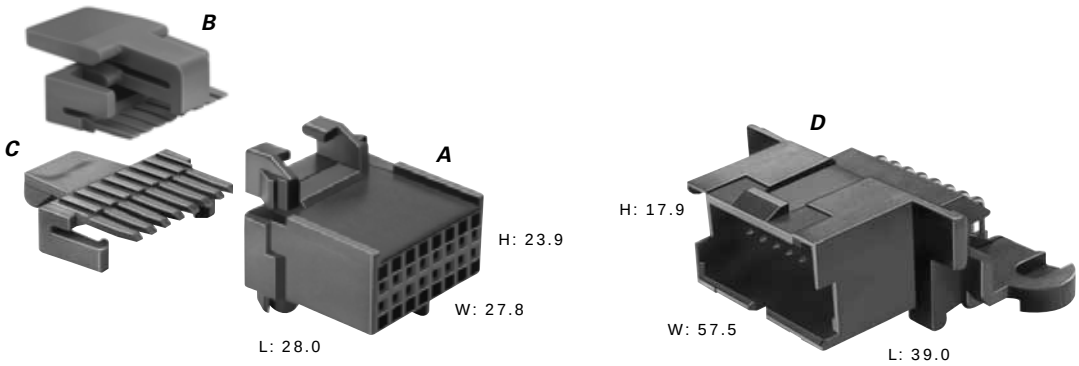

Total Mated Length: 60.4mm

A. Part No: 12110259*† (Green)
12084944*† (Black)
12084945*† (Gray)

Description:	Connector 16F
Size:	28.0L x 23.9H x 27.8W
Material:	PBT 30% GF
Terminals:	See Page 3.8

*Different indexing feature.

B. Part No: 12048344

Description:	TPA
Color:	Blue
Material:	PA66 HS IM

C. Part No: 12048345

Description:	TPA
Color:	Blue
Material:	PA66 HS IM

† For harness assemblies, use either latching TPA 12048344 or low profile TPA 12065463.

D. Part No: 12110261* (Green)
12084948* (Black)
12084949* (Gray)

Description:	Connector Assembly 16M
Size:	39.0L x 17.9H x 57.5W
Material:	PBT 30% GF

*Different indexing feature.

NOTE: Specifications in this catalog are for general reference only and are subject to change without notice. To verify product information, please contact a Delphi representative.

Peters de Laet
503-661-5088 – phone 503-661-5328 – fax
www.pdel.com

100 Header

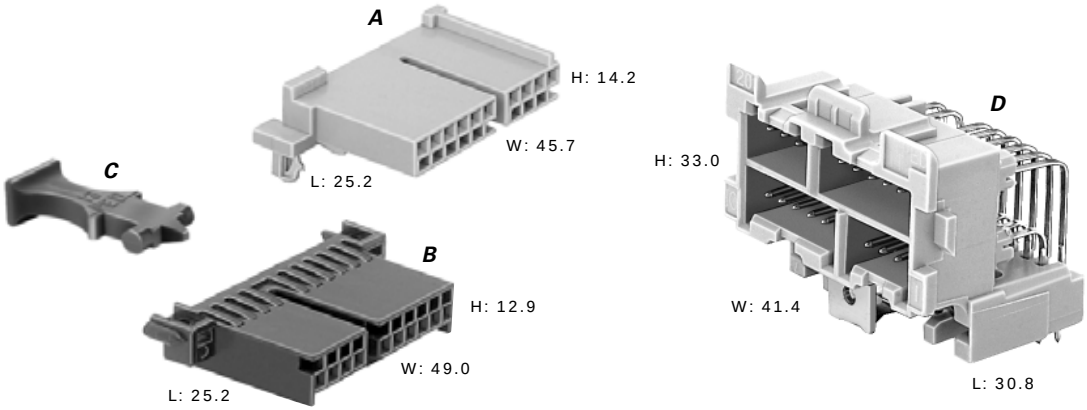

Total Mated Length: 55.3mm

A. Part No: 12065785

Description:	Connector 10F - with Button Lock
Size:	25.2L x 14.2H x 45.7W
Color:	Lt. Gray
Material:	PA66 HS IM
Terminals:	See Page 3.8

B. Part No: 12047531

Description:	Connector 10F - with Button Lock
Size:	25.2L x 12.9H x 49.0W
Color:	Black
Material:	PA66 HS IM
Terminals:	See Page 3.8

C. Part No: 12064989

Description:	CPA
Color:	Orange
Material:	PP IM

D. Part No: 12089852

Description:	Connector Assembly 20M
Size:	30.8L x 33.0H x 41.4W
Color:	Black
Material:	PBT 30% GF

NOTE: Specifications in this catalog are for general reference only and are subject to change without notice. To verify product information, please contact a Delphi representative.

Peters de Laet
503-661-5088 – phone 503-661-5328 – fax
www.pdel.com

100 Header

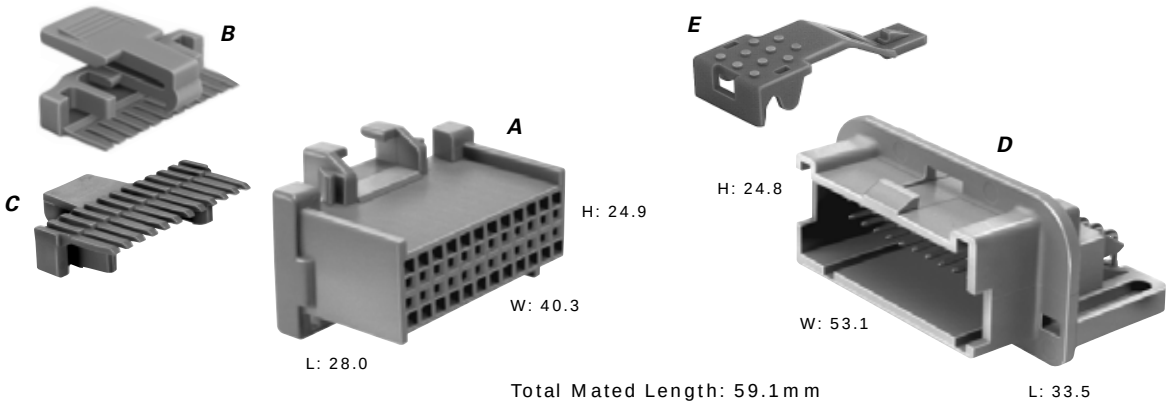

A. Part No: 12110088†

Description:	Connector 24F
Size:	28.0L x 24.9H x 40.3W
Color:	Gray
Material:	PBT 30% GF
Terminals:	See Page 3.8

B. Part No: 12047900

Description:	TPA
Color:	Blue
Material:	PA66 HS IM

C. Part No: 12047901

Description:	TPA
Color:	Blue
Material:	PA66 HS IM

D. Part No: 12092886

Description:	Connector Assembly 24M
Size:	33.5L x 24.8H x 53.1W
Color:	Gray
Material:	PBT 30% GF

E. Part No: 12077899

Description:	CPA
Color:	Orange
Material:	PP IM

† For harness assemblies, use either latching TPA 12047900 or low profile TPA 12065209.

NOTE: Specifications in this catalog are for general reference only and are subject to change without notice. To verify product information, please contact a Delphi representative.

Peters de Laet
503-661-5088 – phone 503-661-5328 – fax
www.pdel.com

100 Header

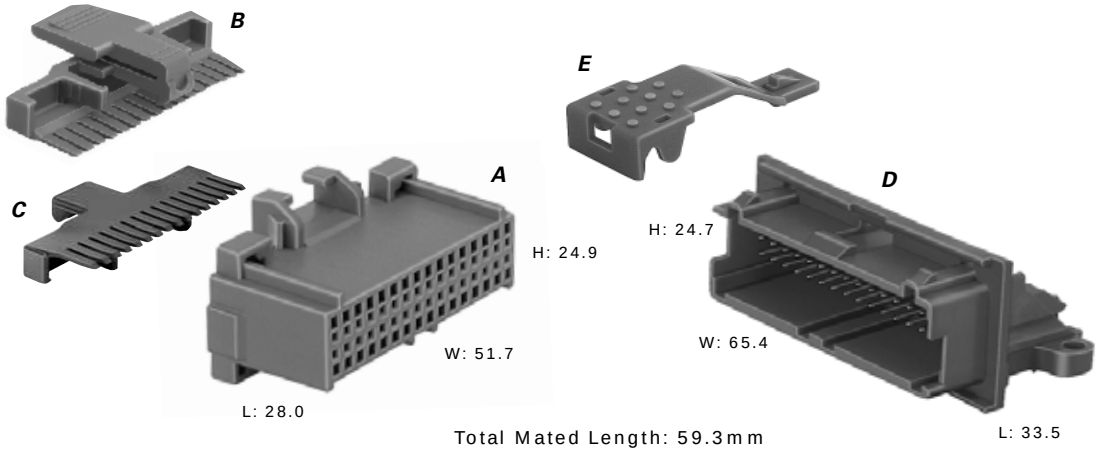

Total Mated Length: 59.3mm

A. Part No: 12110113*† (Dk. Red)
12110114*† (Natural)
12110115*† (Dk. Blue)
12110112*† (Tan)

Description:	Connector 32F
Size:	28.0L x 24.9H x 51.7W
Material:	PBT 30% GF
Terminals:	See Page 3.8

*Different indexing feature.

B. Part No: 12045889

Description:	TPA
Color:	Blue
Material:	PA66 HS IM

C. Part No: 12045890

Description:	TPA
Color:	Md. Gray
Material:	PA66 HS IM

† If mating connector to gold pins, gold pins must be used.
If mating to tin pins, tin pins must be used.

D. Part No: 12129340* (Dk. Red)
12129341* (Natural)
12129342* (Dk. Blue)
12129369* (Tan)

Description:	Connector Assembly 32M
Size:	33.5L x 24.7H x 65.4W
Material:	PBT 30% GF

*Different indexing feature.

E. Part No: 12077899

Description:	CPA
Color:	Orange
Material:	PP IM

NOTE: Specifications in this catalog are for general reference only and are subject to change without notice. To verify product information, please contact a Delphi representative.

Peters de Laet
503-661-5088 – phone 503-661-5328 – fax
www.pdel.com

100 Header

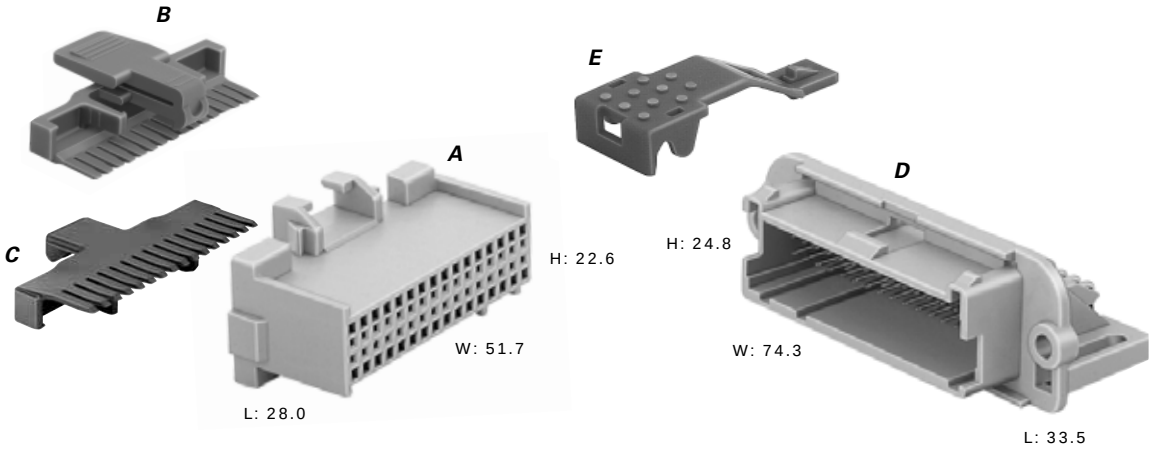

Total Mated Length: 59.3mm

A. Part No: 12110207†

Description:	Connector 32F
Size:	28.0L x 22.6H x 51.7W
Color:	Lt. Blue
Material:	PBT 30% GF
Terminals:	See Page 3.8

B. Part No: 12045889

Description:	TPA
Color:	Blue
Material:	PA66 HS IM

C. Part No: 12045890

Description:	TPA
Color:	Md. Gray
Material:	PA66 HS IM

† If mating connector to gold pins, gold pins must be used.
If mating to tin pins, tin pins must be used.

D. Part No: 12110323

Description:	Connector Assembly 32M
Size:	33.5L x 24.8H x 74.3W
Color:	Lt. Blue
Material:	PBT 30% GF

E. Part No: 12077899

Description:	CPA
Color:	Orange
Material:	PP IM

NOTE: Specifications in this catalog are for general reference only and are subject to change without notice. To verify product information, please contact a Delphi representative.

Peters de Laet
503-661-5088 – phone 503-661-5328 – fax
www.pdel.com

100 Header

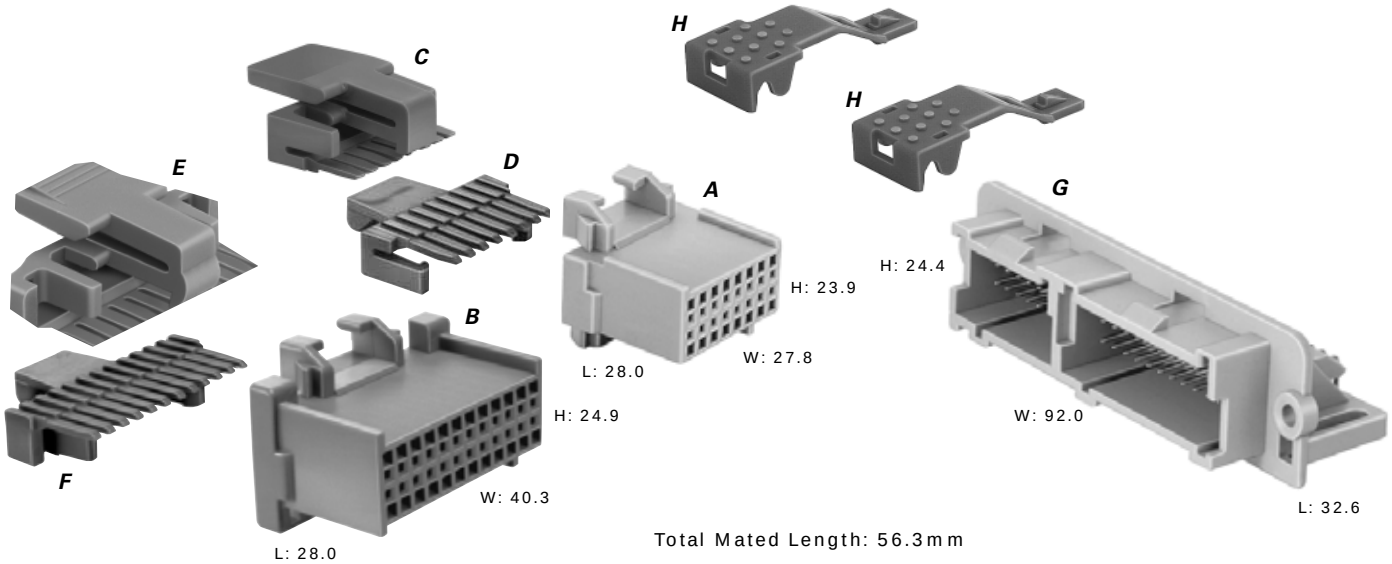

A. Part No: 12084945

Description:	Connector 16F
Size:	28.0L x 23.9H x 27.8W
Color:	Gray
Material:	PBT 30% GF
Terminals:	See Page 3.8

B. Part No: 12110088

Description:	Connector 24F
Size:	28.0L x 24.9H x 40.3W
Color:	Gray
Material:	PBT 30% GF
Terminals:	See Page 3.8

C. Part No: 12048344

Description:	TPA
Color:	Blue
Material:	PA66 HS IM

D. Part No: 12048345

Description:	TPA
Color:	Blue
Material:	PA66 HS IM

E. Part No: 12047900

Description:	TPA
Color:	Blue
Material:	PA66 HS IM

F. Part No: 12047901

Description:	TPA
Color:	Blue
Material:	PA66 HS IM

G. Part No: 12191050

Description:	Connector Assembly 40M
Size:	32.6L x 24.4H x 92.0W
Color:	Gray
Material:	PBT 30% GF

H. Part No: 12077899

Description:	CPA
Number Req:	2
Color:	Orange
Material:	PP IM

NOTE: Specifications in this catalog are for general reference only and are subject to change without notice. To verify product information, please contact a Delphi representative.

Peters de Laet
503-661-5088 – phone 503-661-5328 – fax
www.pdel.com

100 Header

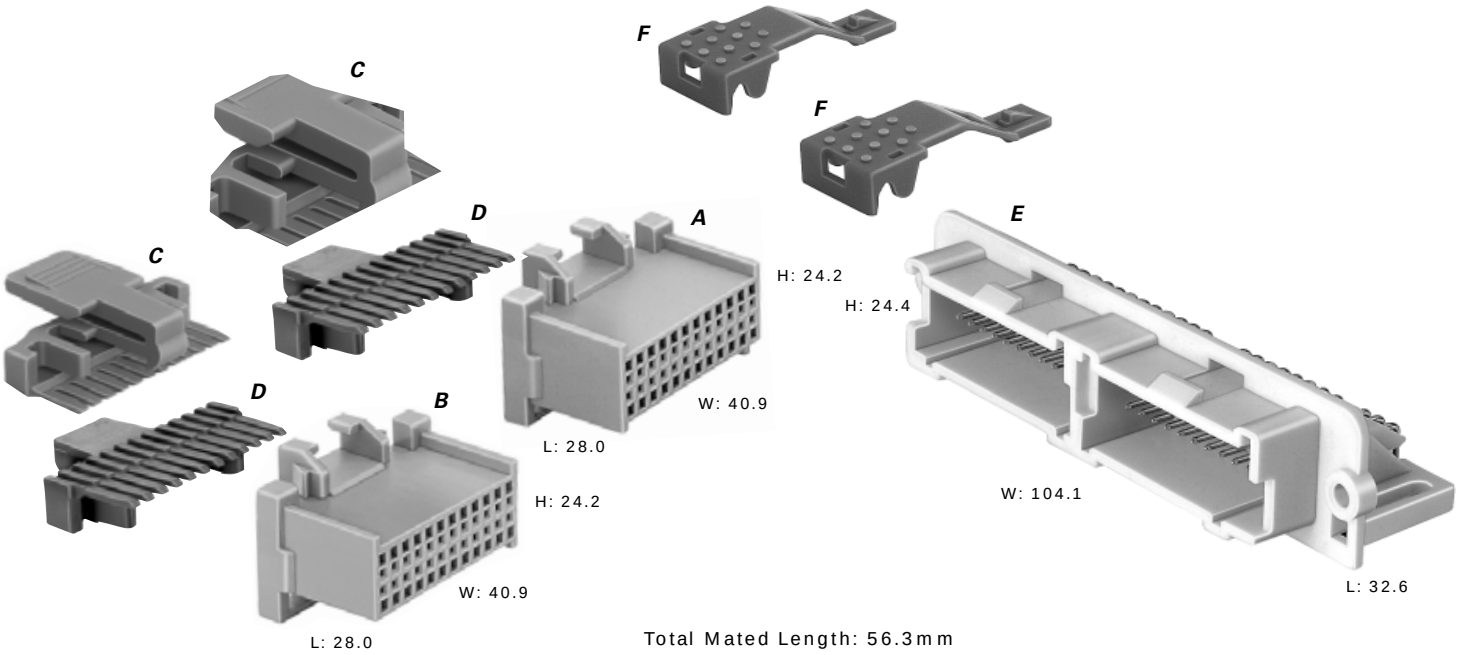

Total Mated Length: 56.3mm

A. Part No: 12110244†

Description:	Connector 24F
Size:	28.0L x 24.2H x 40.9W
Color:	Pink
Material:	PBT 30% GF
Terminals:	See Page 3.8

B. Part No: 12110206†

Description:	Connector 24F
Size:	28.0L x 24.2H x 40.9W
Color:	Lt. Blue
Material:	PBT 30% GF
Terminals:	See Page 3.8

C. Part No: 12047900

Description:	TPA
Number Req:	2
Color:	Blue
Material:	PA66 HS IM

D. Part No: 12047901

Description:	TPA
Number Req:	2
Color:	Blue
Material:	PA66 HS IM

† For harness assemblies, use either latching TPA 12047900 or low profile TPA 12065209.

E. Part No: 12191140

Description:	Connector Assembly 48M
Size:	32.6L x 24.4H x 104.1W
Color:	Natural
Material:	PBT 30% GF

F. Part No: 12077899

Description:	CPA
Number Req:	2
Color:	Orange
Material:	PP IM

NOTE: Specifications in this catalog are for general reference only and are subject to change without notice. To verify product information, please contact a Delphi representative.

Peters de Laet
503-661-5088 – phone 503-661-5328 – fax
www.pdel.com

100 Header

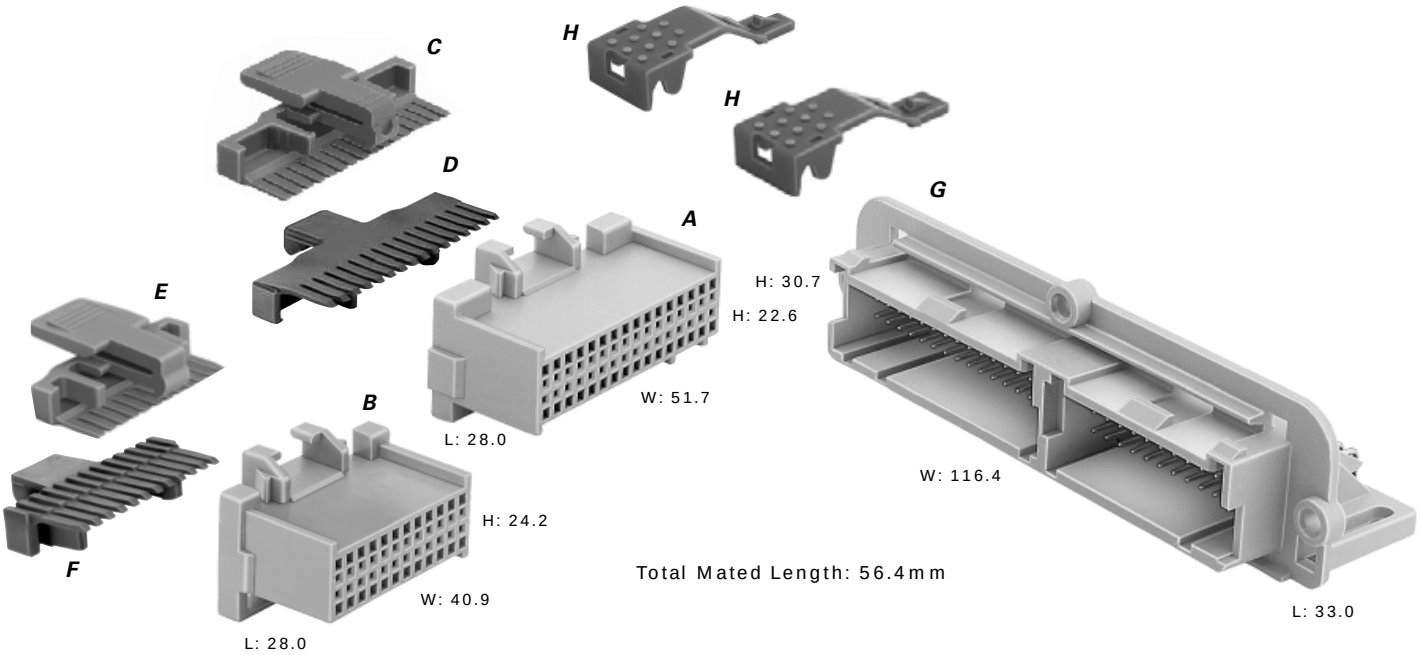

A. Part No: 12110207* (Lt. Blue)
12110245*† (Pink)
12160779* (Brown)

Description:	Connector 32F
Size:	28.0L x 22.6H x 51.7W
Material:	PBT 30% GF
Terminals:	See Page 3.8

*Different indexing feature.

B. Part No: 12110206* (Lt. Blue)
12110244* (Pink)
12160778* (Brown)

Description:	Connector 24F
Size:	28.0L x 24.2H x 40.9W
Material:	PBT 30% GF
Terminals:	See Page 3.8

*Different indexing feature.

C. Part No: 12045889

Description:	TPA
Color:	Blue
Material:	PA66 HS IM

D. Part No: 12045890

Description:	TPA
Color:	Md. Gray
Material:	PA66 HS IM

† For harness assemblies, use either latching TPA 12045889 or low profile TPA 12065208.

E. Part No: 12047900

Description:	TPA
Color:	Blue
Material:	PA66 HS IM

F. Part No: 12047901

Description:	TPA
Color:	Blue
Material:	PA66 HS IM

G. Part No: 12110209* (Lt. Blue)
12110241* (Pink)
12160777* (Brown)

Description:	Connector Assembly 56M
Size:	33.0L x 30.7H x 116.4W
Material:	PBT 30% GF

*Different indexing feature.

H. Part No: 12077899

Description:	CPA
Number Req:	2
Color:	Orange
Material:	PP IM

NOTE: Specifications in this catalog are for general reference only and are subject to change without notice. To verify product information, please contact a Delphi representative.

Peters de Laet
503-661-5088 – phone 503-661-5328 – fax
www.pdel.com

100 Header

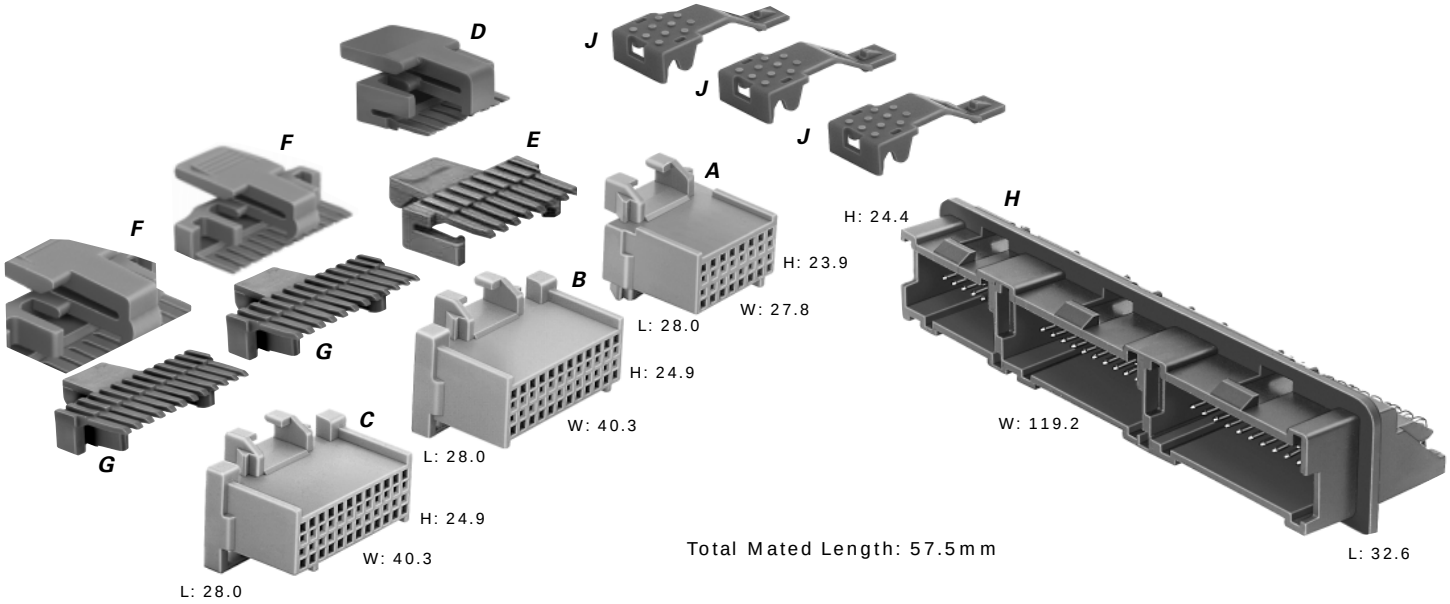

A. Part No: 12084945* (Gray)
12191375* (Purple)

Description:	Connector 16F
Size:	28.0L x 23.9H x 27.8W
Material:	PBT 30% GF
Terminals:	See Page 3.8

*Different indexing feature.

B. Part No: 12110088* (Gray)
12110206* (Lt. Blue)

Description:	Connector 24F
Size:	28.0L x 24.9H x 40.3W
Material:	PBT 30% GF
Terminals:	See Page 3.8

*Different indexing feature.

C. Part No: 12110244* (Pink)
12160778* (Brown)

Description:	Connector 24F
Size:	28.0L x 24.9H x 40.3W
Material:	PBT 30% GF
Terminals:	See Page 3.8

*Different indexing feature.

D. Part No: 12048344

Description:	TPA
Color:	Blue
Material:	PA66 HS IM

E. Part No: 12048345

Description:	TPA
Color:	Blue
Material:	PA66 HS IM

F. Part No: 12047900

Description:	TPA
Number Req:	2
Color:	Blue
Material:	PA66 HS IM

G. Part No: 12047901

Description:	TPA
Number Req:	2
Color:	Blue
Material:	PA66 HS IM

H. Part No: 12160861* (Black)
12191293* (Dk. Blue)

Description:	Connector Assembly 64M
Size:	32.6L x 24.4H x 119.2W
Material:	PBT 30% GF

*Different indexing feature.

J. Part No: 12077899

Description:	CPA
Number Req:	3
Color:	Orange
Material:	PP IM

NOTE: Specifications in this catalog are for general reference only and are subject to change without notice. To verify product information, please contact a Delphi representative.

Peters de Laet
503-661-5088 – phone 503-661-5328 – fax
www.pdel.com

100 Mixed

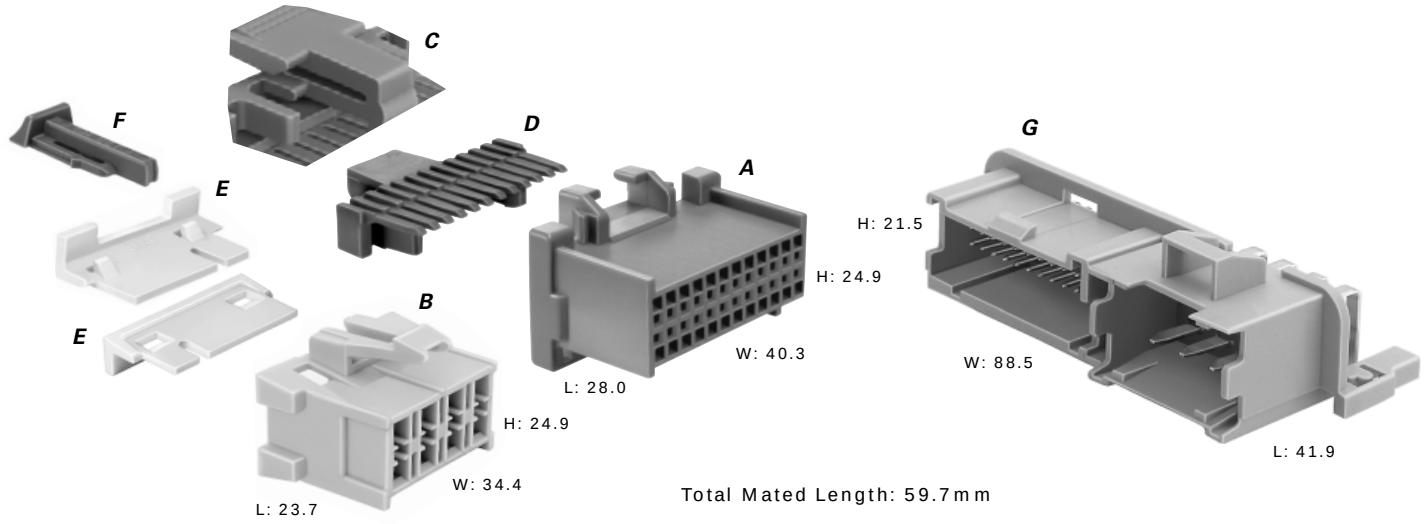

A. Part No: 12110088* (Gray)
12110206* (Lt. Blue)
12110244* (Pink)

Description:	Connector 24F
Size:	28.0L x 24.9H x 40.3W
Material:	PBT 30% GF
Terminals:	See Page 3.8

*Different indexing feature.

B. Part No: 12110626†

Description:	Connector 8F
Size:	23.7L x 24.9H x 34.4W
Color:	Lt. Gray
Material:	PA66 HS IM
Terminals:	See Page 2.104, 280 Metri-Pack Tangless

C. Part No: 12047900

Description:	TPA
Color:	Blue
Material:	PA66 HS IM

D. Part No: 12047901

Description:	TPA
Color:	Blue
Material:	PA66 HS IM

E. Part No: 15324332

Description:	TPA
Number Req:	2
Color:	Natural
Material:	PA66 HS IM

F. Part No: 12052834

Description:	CPA
Color:	Green
Material:	PP IM

† Use p/n 15357040 to mate to audio amplifiers.

G. Part No: 15357042* (Gray)
15357044* (Lt. Blue)
15357046* (Pink)

Description:	Connector Assembly 32M
Size:	41.9L x 21.5H x 88.5W
Material:	PBT 30% GF

*Different indexing feature.

NOTE: Specifications in this catalog are for general reference only and are subject to change without notice. To verify product information, please contact a Delphi representative.

Peters de Laet
503-661-5088 – phone 503-661-5328 – fax
www.pdel.com

100W Header

Cross Sectional View

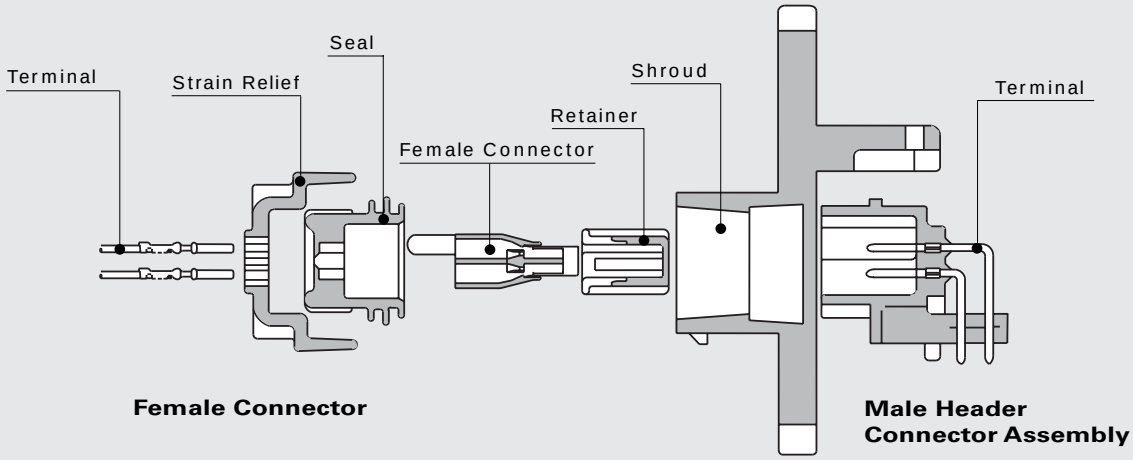

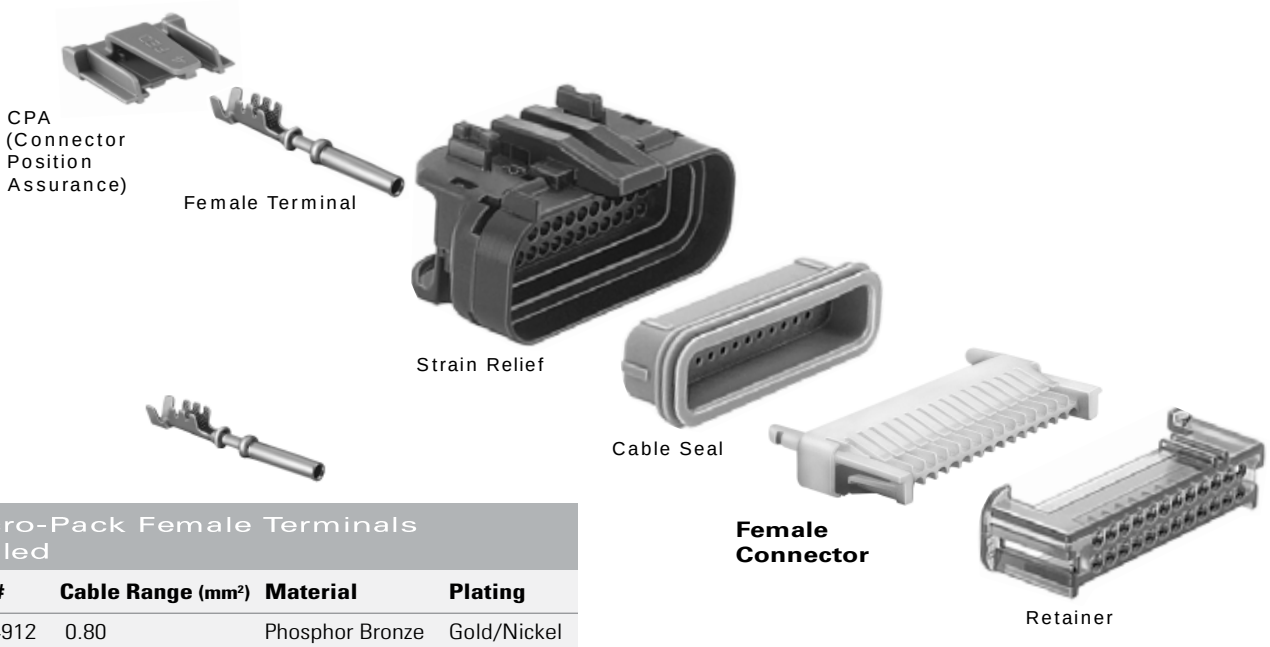

Micro-Pack Female Terminals Sealed

Part #	Cable Range (mm²)	Material	Plating
12084912	0.80	Phosphor Bronze	Gold/Nickel
12084913	0.50-0.35	Phosphor Bronze	Gold/Nickel

Micro-Pack Female Connectors Sealed

# Cavities	Connector	Color	Material	TPA	Retainer**	Seal	Strain Relief
24	12129225	Natural	PBT	–	12129183	12110403*	12110155
32	12129025	Natural	PBT	–	12129023	12129026*	12129030
36	12110487	Black	PBT	–	12110488	12110489*	12110490

* Validated for 0.80-0.50 cable.
** Retainers provide terminal position assurance.

NOTE: Specifications in this catalog are for general reference only and are subject to change without notice. To verify product information, please contact a Delphi representative.

Peters de Laet
503-661-5088 – phone 503-661-5328 – fax
www.pdel.com

100W Header

Sealed System Application Information

CABLE RANGE (mm²): 0.35-0.8

CURRENT RANGE (AMPS): 0-7.5

TEMP RANGE °C: ..... -40 to 125

RESISTANCE: ..... <10mΩ@20mV

VOLTAGE DROP: ... <10.0mV/amp

CENTERLINE SPACING (mm): 3.5

TERMINAL DIAMETER (mm): 1.0

Micro-Pack 100W Terminals – Gold Plated

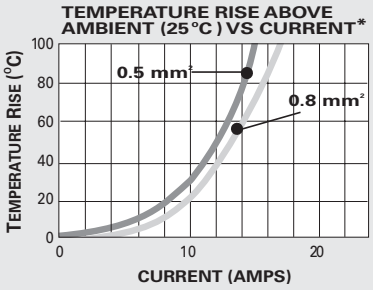

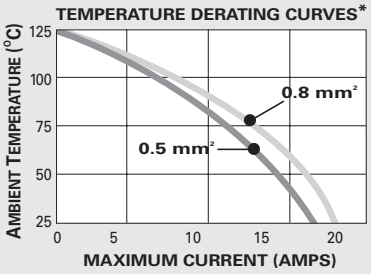

*The test data are based on single circuits in free space and were generated using a "Lumped Resistance" model. This model does not account for all of the variables that would be present in an actual application. For actual product performance, contact your regional support representative.

Male Header Connector Assembly

Micro-Pack Male Header Connector Assemblies Sealed			
# Cavities	**Connector**	**Color**	**Material**
24	12092320	Black	PBT 30% GF
32	12129008	Blue	PBT 30% GF
36	12110485	Black	PBT 30% GF

Terminals included in connector assembly.

SECTION NOTES:

- Sealing shroud and locking feature for connector assembly must be designed into mating device housing.

NOTE: Specifications in this catalog are for general reference only and are subject to change without notice. To verify product information, please contact a Delphi representative.

Peters de Laet
503-661-5088 – phone 503-661-5328 – fax
www.pdel.com

100W Header

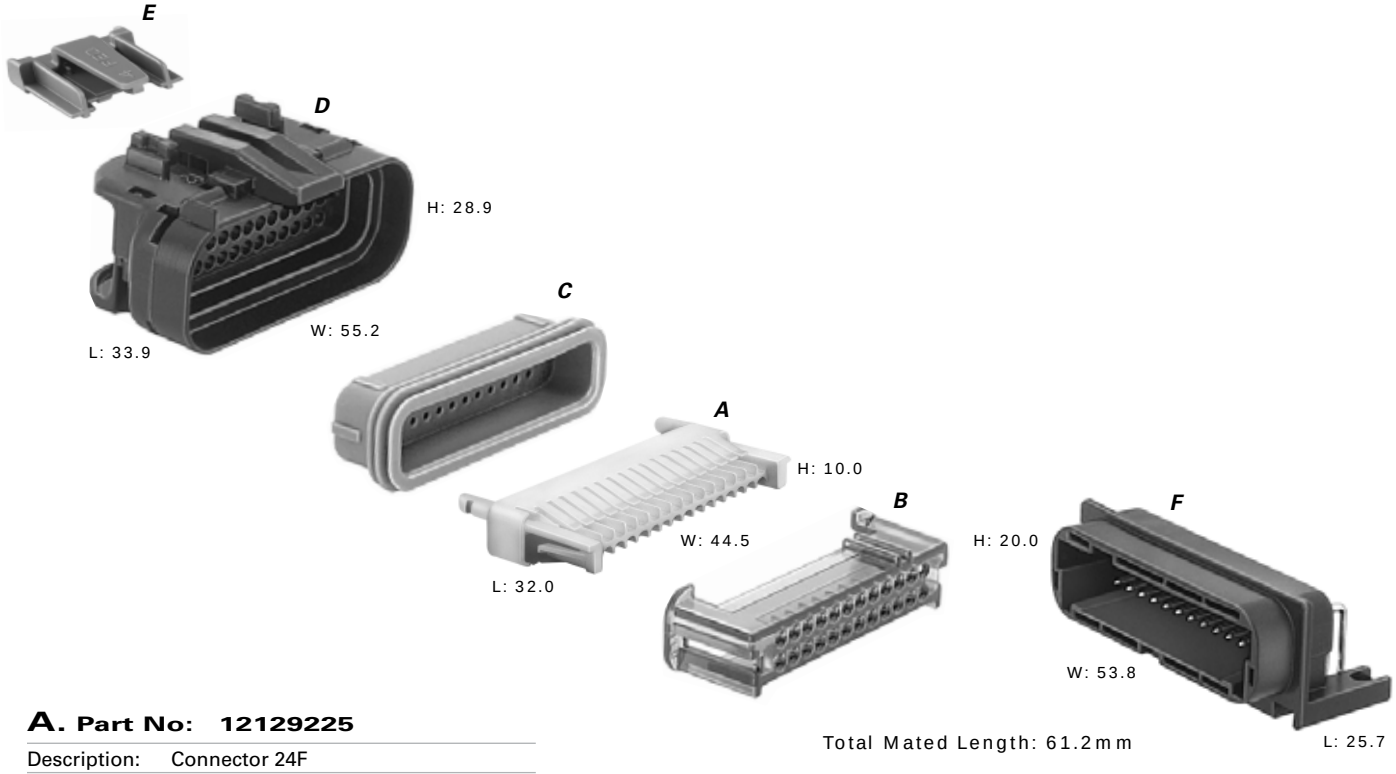

A. Part No: 12129225

Description:	Connector 24F
Size:	32.0L x 10.0H x 44.5
Color:	Natural
Material:	PBT
Terminals:	See Page 3.24

B. Part No: 12129183

Description:	Retainer 24F
Color:	Black
Material:	PC

C. Part No: 12110403

Description:	Seal 24F
Color:	Green
Material:	Silicone

D. Part No: 12110155 (Right Wire Dress)

Description:	Strain Relief 24F
Color:	Gray
Size:	33.9L x 28.9H x 55.2W
Material:	TEEE

E. Part No: 12110299

Description:	CPA
Color:	Red
Material:	PBT

F. Part No: 12092320

Description:	Connector Assembly 24M
Size:	25.7L x 20.0H x 53.8W
Color:	Black
Material:	PBT 30% GF

NOTE: Specifications in this catalog are for general reference only and are subject to change without notice. To verify product information, please contact a Delphi representative.

Peters de Laet
503-661-5088 – phone 503-661-5328 – fax
www.pdel.com

100W Header

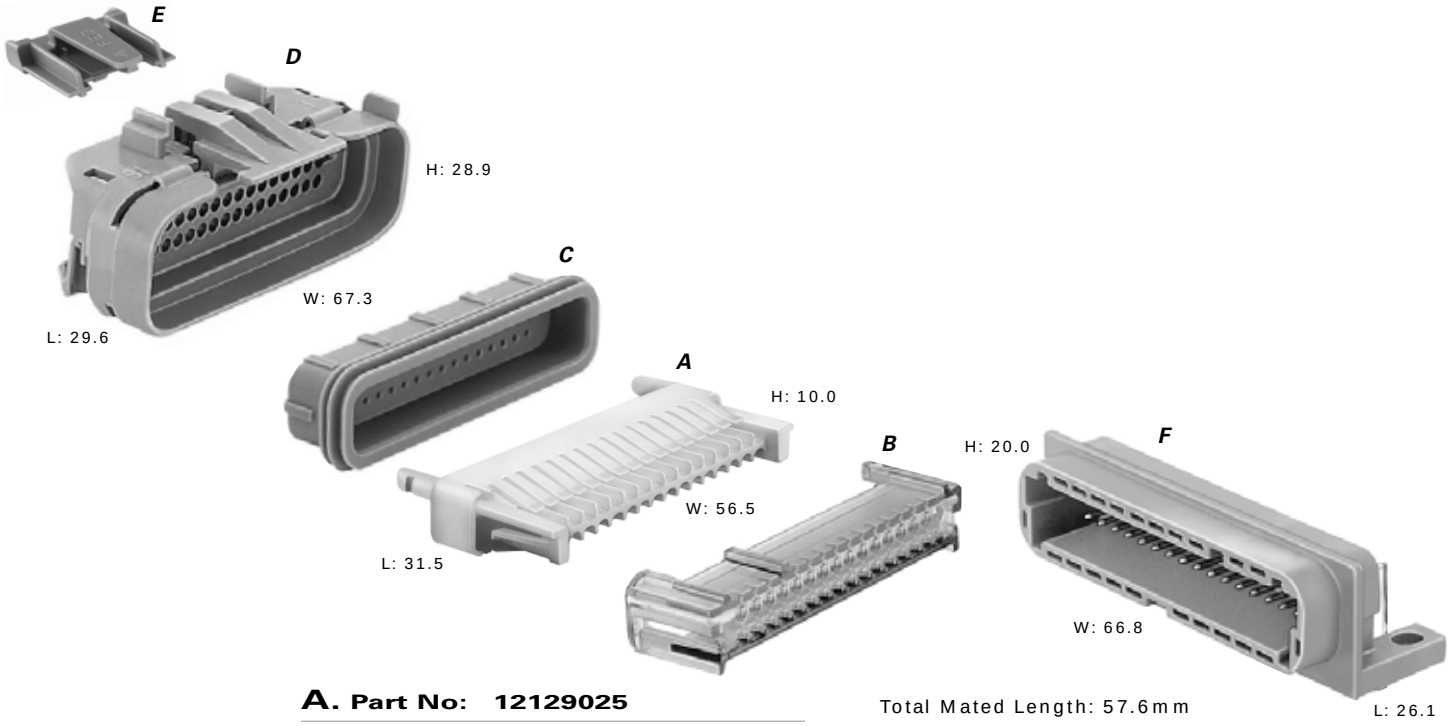

Total Mated Length: 57.6mm

A. Part No: 12129025

Description:	Connector 32F
Size:	31.5L x 10.0H x 56.5W
Color:	Natural
Material:	PBT
Terminals:	See Page 3.24

B. Part No: 12129023* (Md. Blue)
12129021* (Black)
12129022* (Clear)

Description:	Retainer 32F
Material:	PC

*Different indexing feature.

C. Part No: 12129026

Description:	Seal 32F
Color:	Green
Material:	Silicone

D. Part No: 12129030
(Right Wire Dress)

Description:	Strain Relief 32F
Size:	29.6L x 28.9H x 67.3W
Color:	Gray
Material:	TEEE

E. Part No: 12110299

Description:	CPA
Color:	Red
Material:	PBT

F. Part No: 12129008* (Blue)
12186041* (Black)
12186043* (Gray)

Description:	Connector Assembly 32M
Size:	26.1L x 20.0H x 66.8W
Material:	PBT 30% GF

*Different indexing feature.

NOTE: Specifications in this catalog are for general reference only and are subject to change without notice. To verify product information, please contact a Delphi representative.

Peters de Laet
503-661-5088 – phone 503-661-5328 – fax
www.pdel.com

100W Header

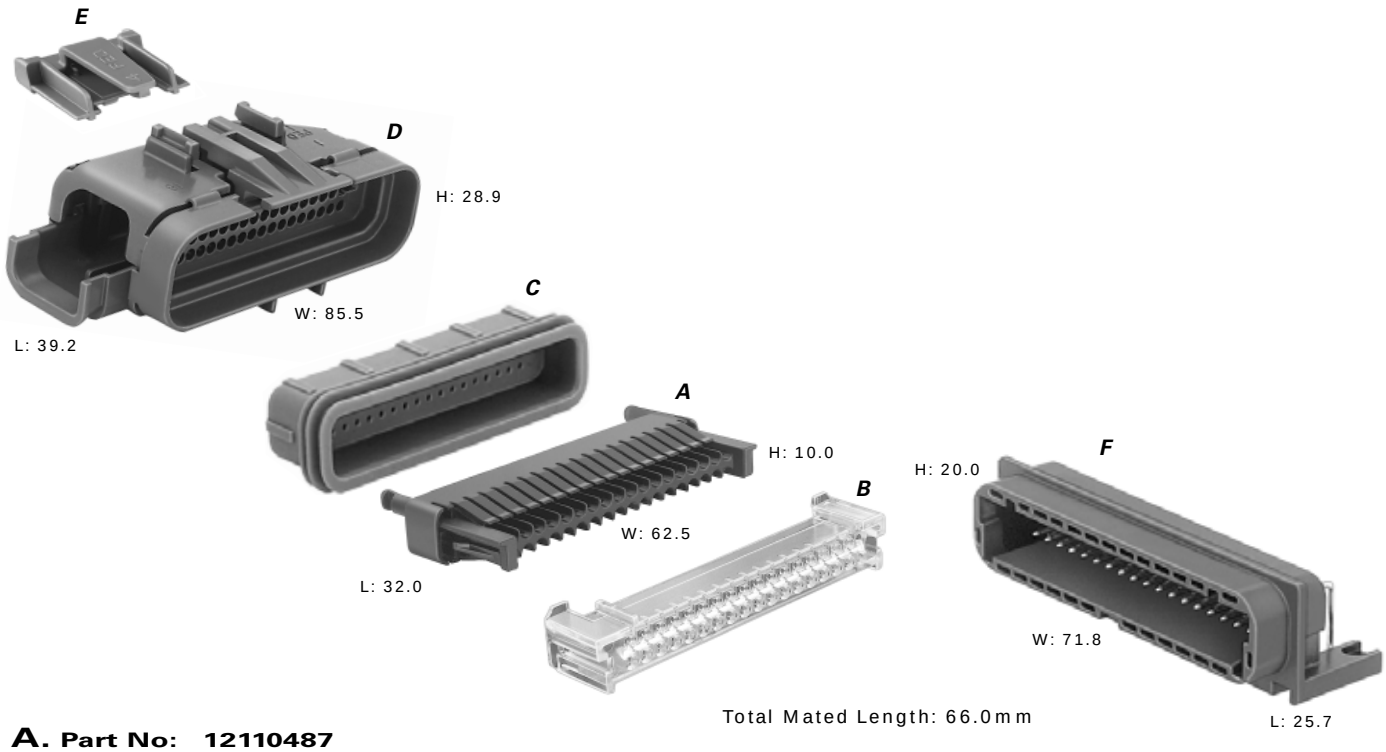

A. Part No: 12110487

Description:	Connector 36F
Size:	32.0L x 10.0H x 62.5W
Color:	Black
Material:	PBT
Terminals:	See Page 3.24

B. Part No: 12110488

Description:	Retainer 36F
Color:	Clear
Material:	PC

C. Part No: 12110489

Description:	Seal 36F
Color:	Green
Material:	Silicone

D. Part No: 12110490 (Right Wire Dress)

Description:	Strain Relief 36F
Size:	39.2L x 28.9H x 85.5W
Color:	Gray
Material:	TEEE

E. Part No: 12110299

Description:	CPA
Color:	Red
Material:	PBT

F. Part No: 12110485

Description:	Connector Assembly 36M
Size:	25.7L x 20.0H x 71.8W
Color:	Black
Material:	PBT 30% GF

NOTE: Specifications in this catalog are for general reference only and are subject to change without notice. To verify product information, please contact a Delphi representative.

Peters de Laet
503-661-5088 – phone 503-661-5328 – fax
www.pdel.com

Unsealed Header Connectors & Mating Components

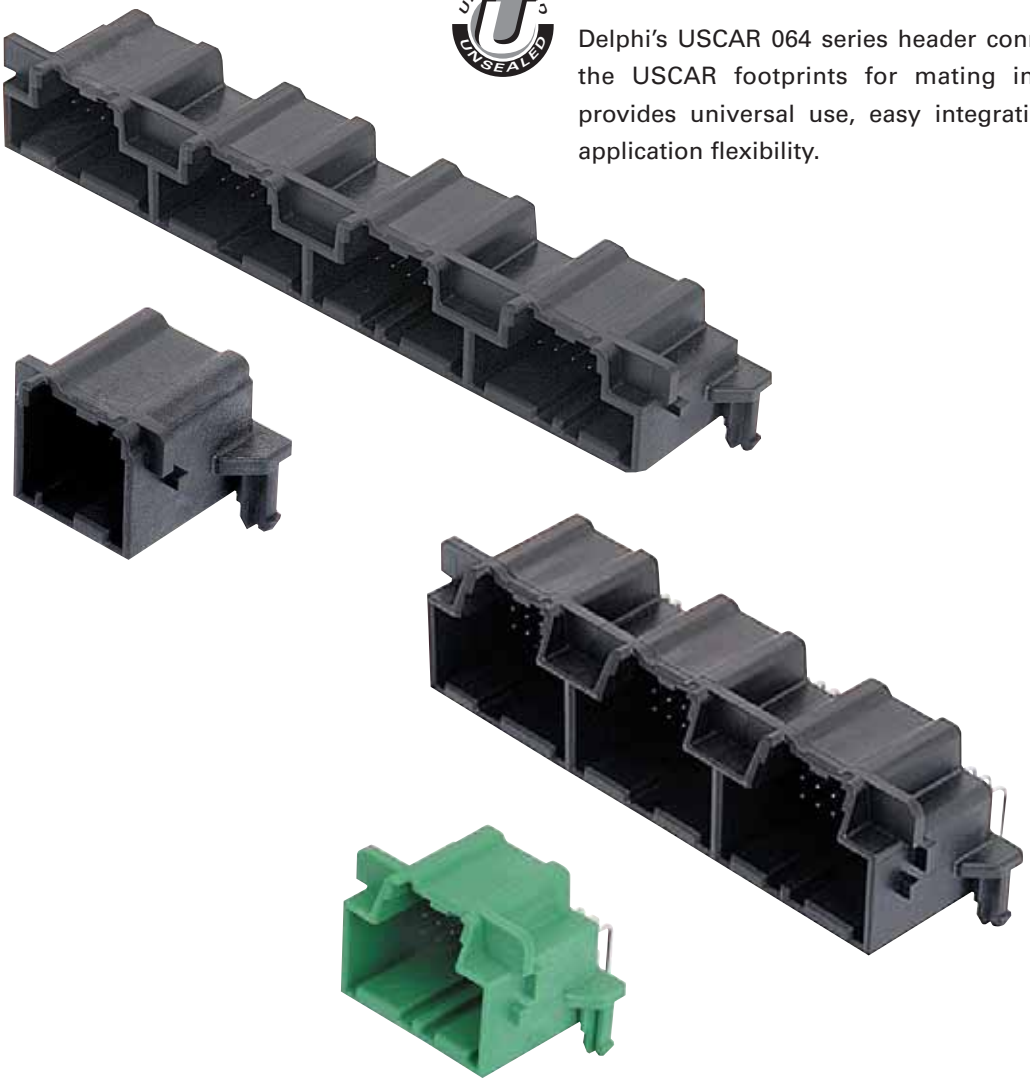

Performance Advantages

Delphi's USCAR 064 series header connectors satisfy the USCAR footprints for mating interfaces. This provides universal use, easy integration and broad application flexibility.

Meeting USCAR Standards

Delphi's standard 064 series unsealed header connectors are USCAR* compliant. These products:

- meet USCAR design guidelines (per SAE/USCAR-12 Revision 2, Dec. 2001)
- meet published USCAR interface footprints
- are validated to USCAR specifications (per SAE/USCAR-2 Revision 3, April 2001)

Two header types are available. They include:

- Standard one-row headers
- Standard two-row headers

Both header types are available in either right angle or straight pin versions.

Mating Connectors

Delphi also offers a complete line of 064 series female mating connectors in USCAR indexes A to F.

*USCAR is the United States Council for Automotive Research.

Peters de Laet
503-661-5088 – phone 503-661-5328 – fax
www.pdel.com

Introduction

Benefits/Features:

- USCAR compliant
- Intermateability
- Interchangeability
- Industry standard design and specifications
- Provides broad application flexibility
- Hand-mateable connections (75N maximum engage force)
- Provides ergonomic assembly and efficient installation
- Standard tin-plated interfaces are cost-effective
- Optional gold-plated interfaces enhance reliability for specific applications
- Secondary terminal lock for enhanced robustness
- Connector position assist (CPA) for superior connection reliability
- Color coding by index options for improved assembly

Tooling

Delphi's 064 series header connectors and components are validated to USCAR specifications (per SAE/USCAR-2 Revision 3, April 2001). All components in this catalog can be supplied from low volume tooling, many of which are available from high volume production tooling as well. PPAP certification can be supplied for low volume production intent tooling if requested.

Typical Applications

Delphi's 064 series header products can be used in the automotive and transportation markets. They are suitable for device, in-line and board-to-wire applications in the following:

- Satellite radios
- Infotainment devices
- Automotive body modules and systems
- HVAC systems

In addition to the markets described, 064 series connectors may apply to other application categories, many of which are listed on the overview chart on page 4.3. Delphi can also provide custom designs based on customer requirements.

064 Series Overview

Characteristics, Benefits/ Features and Applications 4.2

Applications Overview 4.3

Specifications 4.4

064 Series Unsealed Header Connectors

- **One-Row**
  - **Single Modules: 4, 5, 6, 7, 8, 12-way** 4.8
  - **Combination Modules: 16, 24, 32-way** . . 4.18
- **Two-Row**
  - **Single Modules: 8, 10, 12, 16-way** 4.24
  - **Combination Modules: 16, 24, 32, 40, 42, 44, 48, 64-way** 4.32

Mixed Series Unsealed Header Connectors

- **Two-Row**
  - **Combination Modules:**
    - **Amplifier Header 40-way** 4.48
    - **Radio Header 30 & 46-way** 4.49

Mating Components (Unsealed Female Connectors)

- **MicroHVT**
  - **One-Row: 4, 5, 6, 7, 8-way** 4.50
  - **Two-Row: 8, 10, 12, 16-way** 4.55
  - **Terminals** 4.59
- **Micro64**
  - **Two-Row: 8, 10, 16-way** 4.60
  - **Terminals** 4.63

Peters de Laet
503-661-5088 – phone 503-661-5328 – fax
www.pdel.com

Typical Applications Overview

Products	064 Headers	Micro64	MicroHVT
Typical Applications	■ Sirius Satellite Radios* ■ XM Satellite Radios** ■ Infotainment devices, including DVDs ■ Door panels ■ HVAC systems ■ Seat controls ■ Window switches	■ Automotive and commercial vehicles ■ Engine management systems ■ Powertrain control systems ■ ABS braking systems ■ Airbag systems	■ Automotive electronics ■ Telematics ■ Entertainment systems ■ Video ■ Audio, radio, amplifiers ■ Displays, instrument panels ■ Navigation systems ■ Rear camera systems ■ Sensors ■ Switches

The products and applications within this brochure are presented as a reference guide only. Other Delphi Connection Systems' products may also apply to the application categories presented above. In addition, these and other Delphi products may be available for similar application categories not represented in this brochure.

*For additional product information and application support, please contact your local Delphi Connection Systems' sales representative or contact us directly at [1] **248.813.2334**, or visit our website at **http://connectors.delphi.com**.*

* © Sirius Satellite Radio Inc. "Sirius" and related marks are trademarks of Sirius Satellite Radio Inc.
** XM Satellite Radio Inc. is a wholly owned subsidiary of XM Satellite Radio Holdings Inc.

Peters de Laet
503-661-5088 – phone 503-661-5328 – fax
www.pdel.com

064 Series Unsealed Specifications

MicroHVT & Micro64 Mating Terminals

Female Terminal Application Guidelines	MicroHVT	Micro64
Typical Cable Applications	0.35 mm² - 0.50 mm² TWP (SAE J-1128) 0.75 mm² FLRY-A (DIN 72551) 0.80 mm² TXL Reduced Wall (SAE J-1128)	0.35 mm² - 0.50 mm² TWP (SAE J-1128) 0.75 mm² FLRY-A (DIN 72551) 0.80 mm² TXL Reduced Wall (SAE J-1128)
Current Range	0 - 7 amps	0 - 5 amps
Temperature Range	-40°C to +85°C	-40°C to +85°C
Resistance	<20 mΩ @ 20 mV	<20 mΩ @ 20 mV
Voltage Drop	<20 mV/amp	<20 mV/amp
Centerline Spacing	2.54 mm (terminal-to-terminal and row-to-row)	2.54 mm (terminal-to-terminal and row-to-row)
Header Pin	0.64 mm square, tin-plated	0.64 mm square, tin-plated

Temperature Rise/Derating Curves

MicroHVT

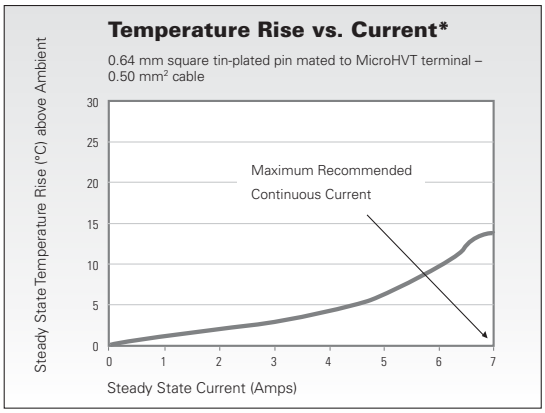

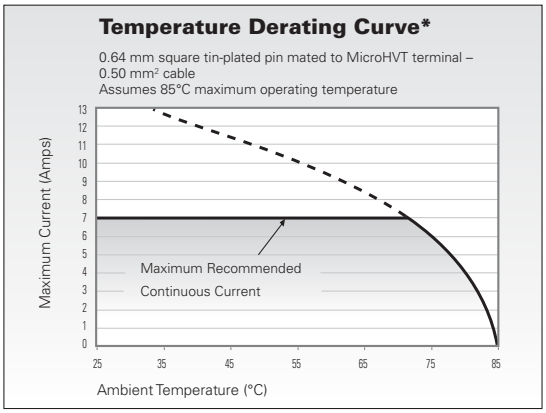

Micro64

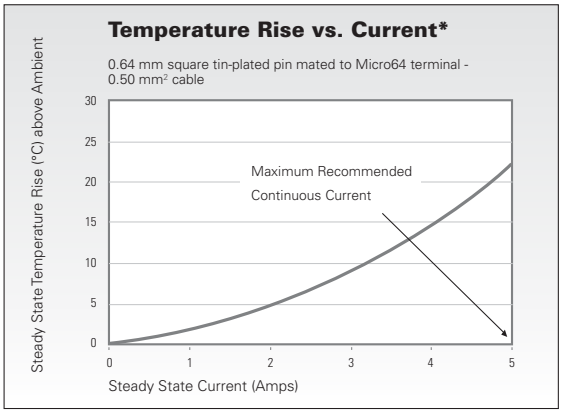

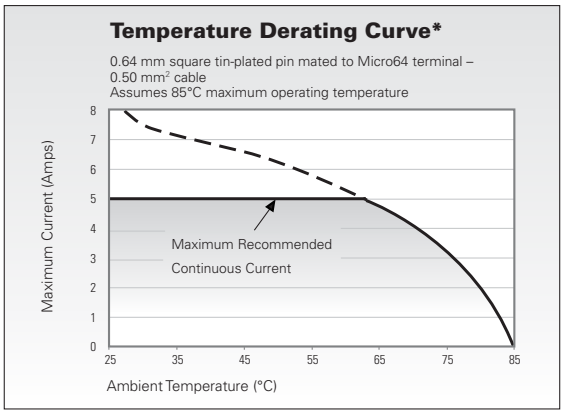

** Data based on laboratory testing of a single circuit in free air. The lab test does not account for all of the variables that would be present in an actual application.*

Peters de Laet
503-661-5088 – phone 503-661-5328 – fax
www.pdel.com

USCAR Footprints

One-Row

Shown: 064-U-008-1-A02

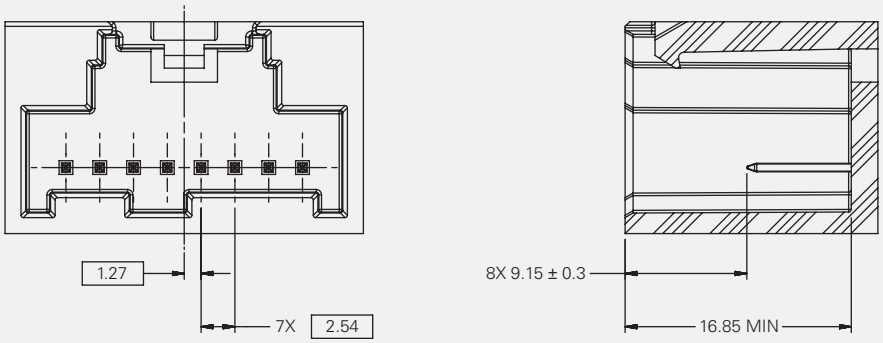

Two-Row

Shown: 064-U-016-2-A02

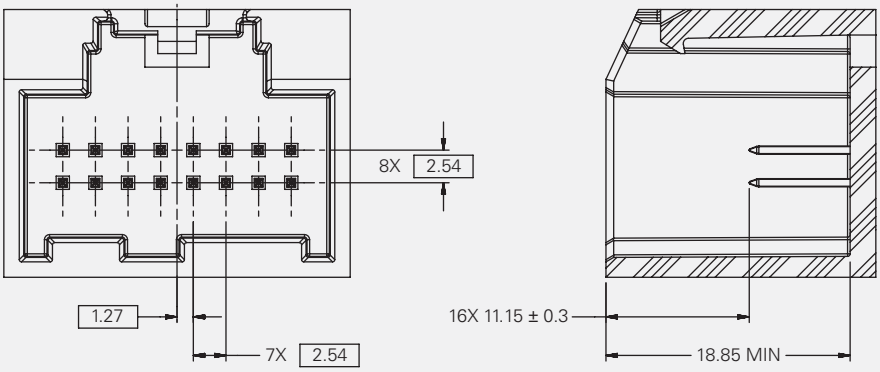

0.64 mm Square Pins

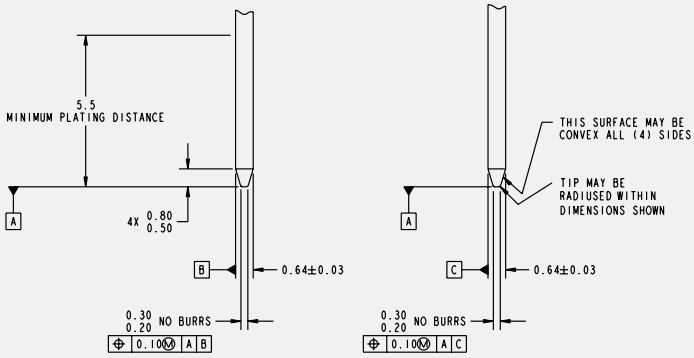

All dimensions shown in millimeters.

Male Pin Notes:

- Pin must be symmetrical within tolerance shown.
- All tip or pin edges may be radiused – R 0.08 max.
- No burrs on tip or pin edges.
- All surfaces of pin must be plated.
- All pin dimensions include plating.

For complete footprint details, visit the EWCAP section at **www.USCARteams.org**.

For header connector part drawings, contact Delphi Connection Systems or visit **http://connectors.delphi.com**.

USCAR is the United States Council for Automotive Research.

EWCAP is USCAR's Electrical Wiring Component Applications Partnership.

Peters de Laet
503-661-5088 – phone 503-661-5328 – fax
www.pdel.com

USCAR Indexing

One-Row – Index A

Shown: 064-U-008-1-A02

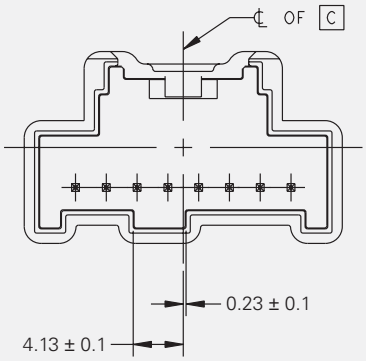

One-Row – Index B

Shown: 064-U-008-1-B02

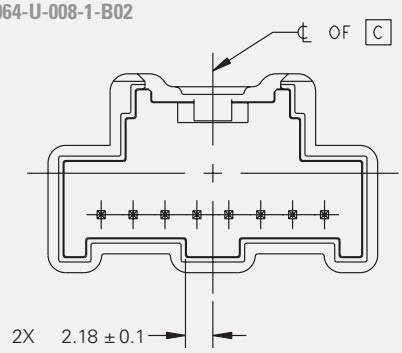

One-Row – Index C

Shown: 064-U-008-1-C02

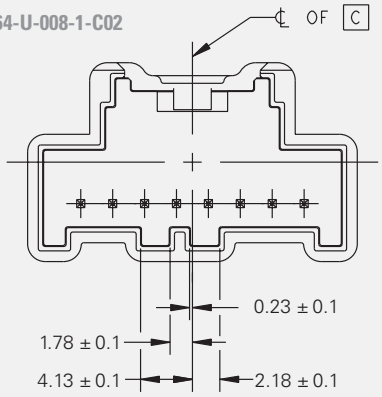

One-Row – Index D

Shown: 064-U-008-1-D02

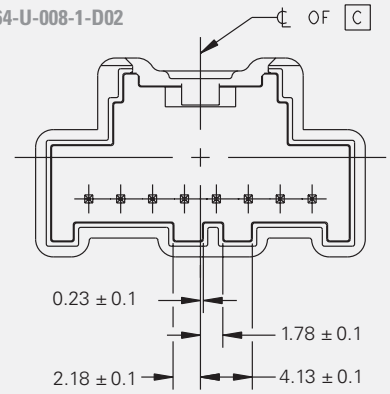

One-Row – Index E

Shown: 064-U-008-1-E02

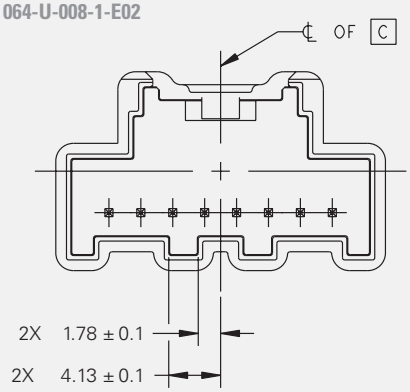

One-Row – Index F

Shown: 064-U-008-1-F02

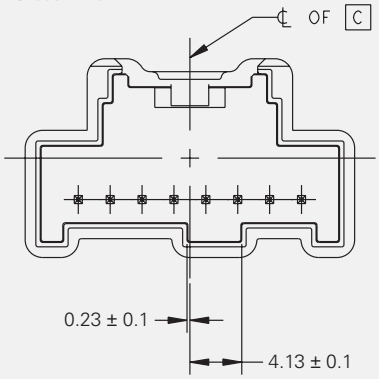

The six USCAR examples shown above are typical of one-row and two-row indexing configurations. For complete indexing details, please visit www.USCARteams.org.

Peters de Laet
503-661-5088 – phone 503-661-5328 – fax
www.pdel.com

Typical Recommended PCB Layouts

1 x 8 - Right Angle

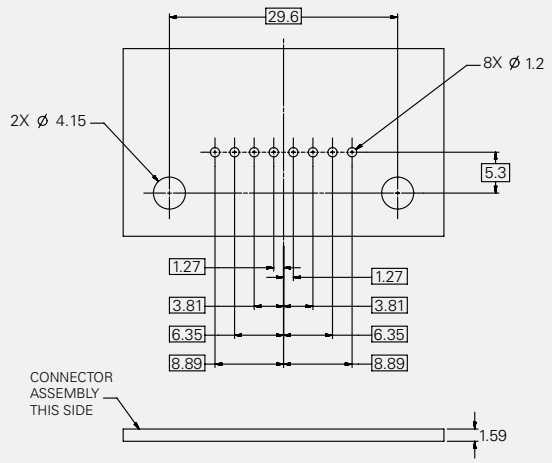

2 x 8 - Right Angle

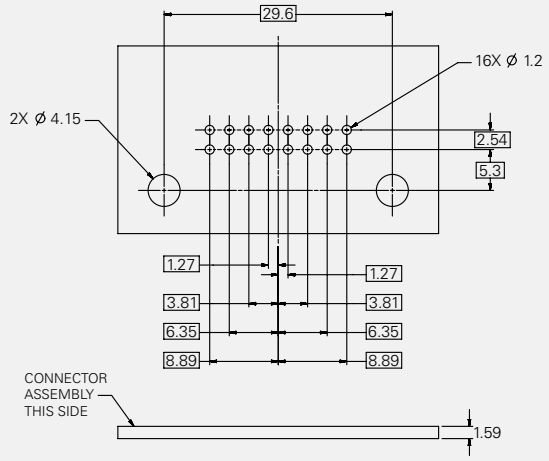

1 x 8 - Straight

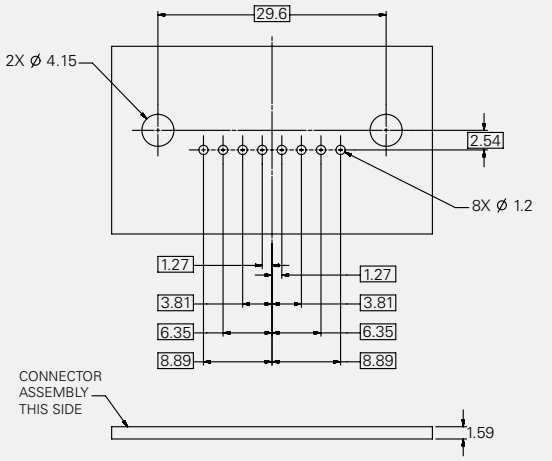

2 x 8 - Straight

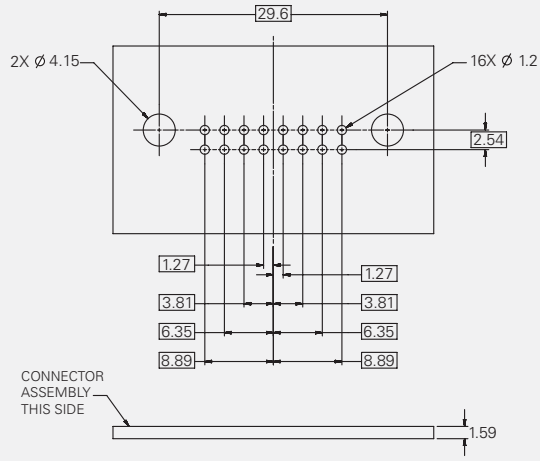

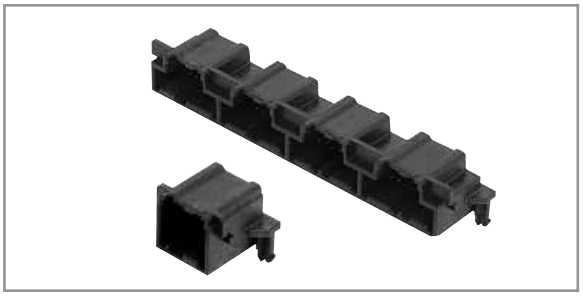

Standard One-Row USCAR Headers

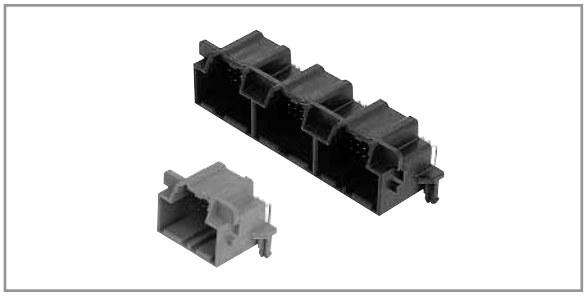

Standard Two-Row USCAR Headers

Peters de Laet
503-661-5088 – phone 503-667-5328 – fax
www.pdel.com

064 Header
One-Row – Single Module

4-way Unsealed - Right Angle

Shown: Index 4A

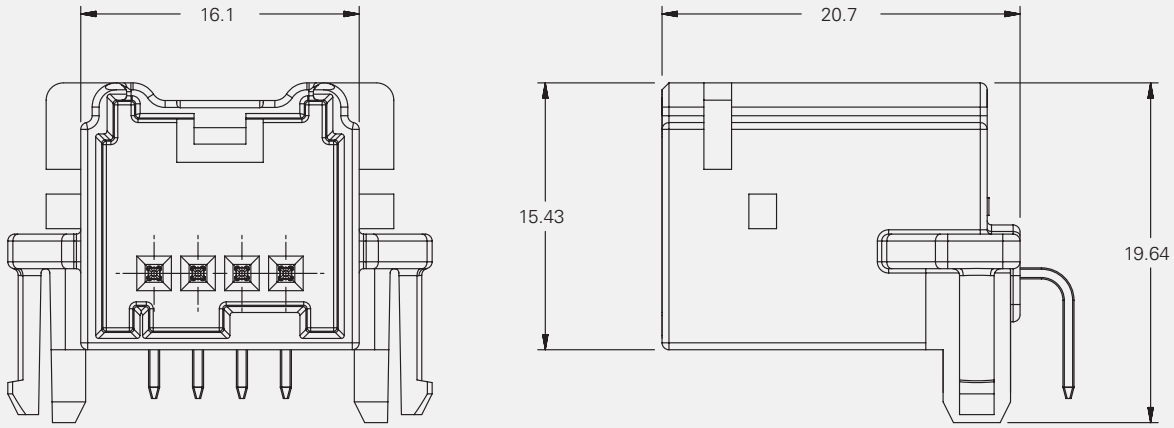

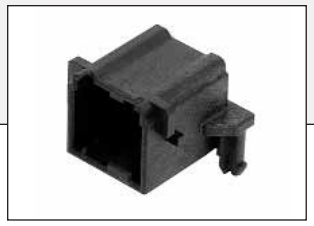

Dimensions shown in millimeters.

Part Number	Material	Color	Index	USCAR Cross-Reference	Mating Connector
					MicroHVT
15462854	PPA GF33 HS	Black	4A	064-U-004-1-A02	13513469
15462855	PPA GF33 HS	Gray	4B	064-U-004-1-B02	PE107546
15462856	PPA GF33 HS	Brown	4C	064-U-004-1-C02	PE107547
15462857	PPA GF33 HS	Green	4D	064-U-004-1-D02	PE107548
15462858	PPA GF33 HS	Dark Blue	4E	064-U-004-1-E02	PE107549
15462859	PPA GF33 HS	Natural	4F	064-U-004-1-F02	13531958

This catalog includes products which are not yet production released.
All catalog parts are available from low volume tooling.
Many catalog parts are available from high volume production tooling.
For parts availability, lead times and additional product information, contact Delphi Connection Systems at 248.813.2334.

NOTE: Specifications in this catalog are for general reference only and are subject to change without notice. To verify product information, please contact a Delphi representative.

Peters de Laet
503-661-5088 – phone 503-661-5328 – fax
www.pdel.com

064 Header
One-Row – Single Module

4-way Unsealed - Straight

Shown: Index 4A

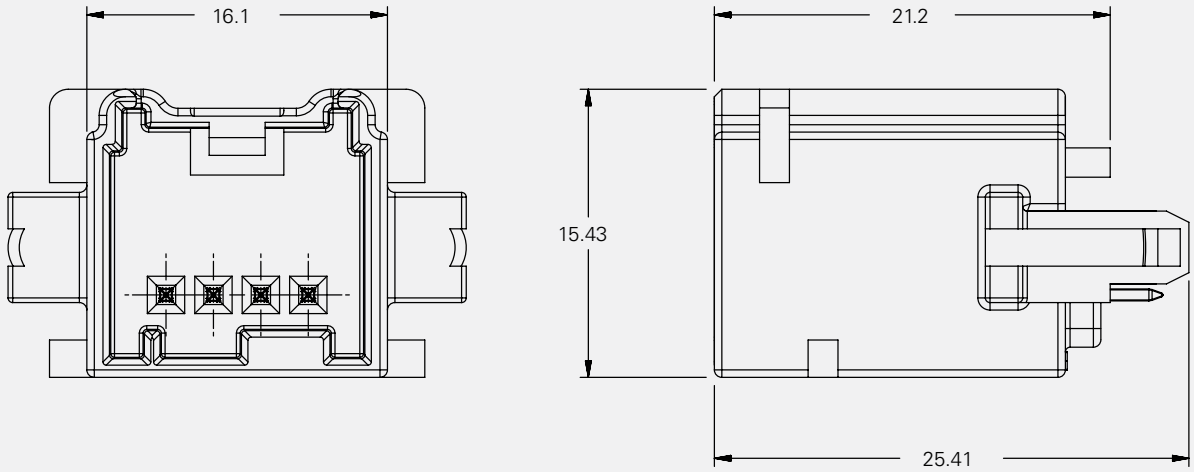

Dimensions shown in millimeters.

Part Number	Material	Color	Index	USCAR Cross-Reference	Mating Connector
					MicroHVT
15462823	PPA GF33 HS	Black	4A	064-U-004-1-A02	13513469
15462824	PPA GF33 HS	Gray	4B	064-U-004-1-B02	PE107546
15462825	PPA GF33 HS	Brown	4C	064-U-004-1-C02	PE107547
15462826	PPA GF33 HS	Green	4D	064-U-004-1-D02	PE107548
15462827	PPA GF33 HS	Dark Blue	4E	064-U-004-1-E02	PE107549
15462828	PPA GF33 HS	Natural	4F	064-U-004-1-F02	13531958

This catalog includes products which are not yet production released.
All catalog parts are available from low volume tooling.
Many catalog parts are available from high volume production tooling.
For parts availability, lead times and additional product information, contact Delphi Connection Systems at 248.813.2334.

NOTE: Specifications in this catalog are for general reference only and are subject to change without notice. To verify product information, please contact a Delphi representative.

Peters de Laet
503-661-5088 – phone 503-661-5328 – fax
www.pdel.com

064 Header
One-Row – Single Module

5-way Unsealed - Right Angle

Shown: Index 5A

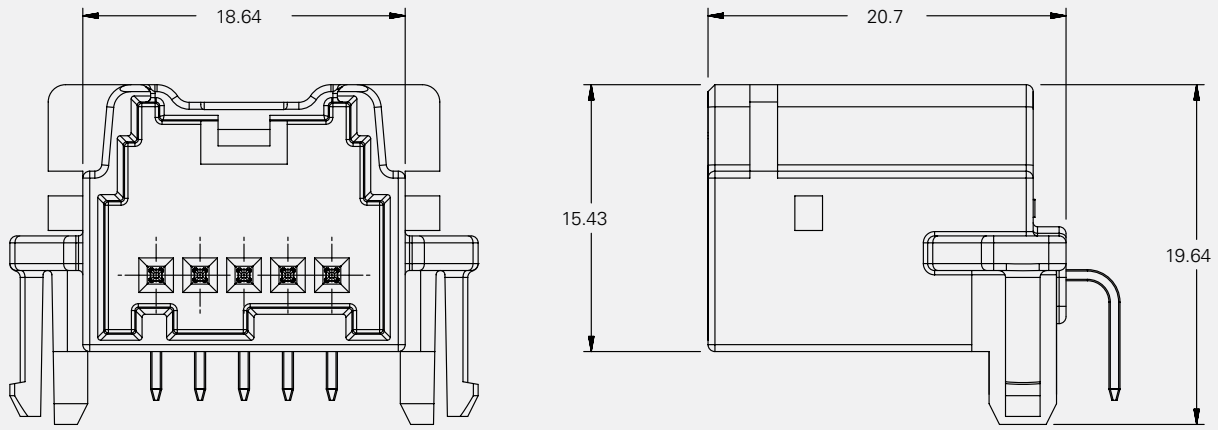

Dimensions shown in millimeters.

Part Number	Material	Color	Index	USCAR Cross-Reference	Mating Connector
					MicroHVT
15462860	PPA GF33 HS	Black	5A	064-U-005-1-A02	PE107551
15462861	PPA GF33 HS	Gray	5B	064-U-005-1-B02	PE107552
15462862	PPA GF33 HS	Brown	5C	064-U-005-1-C02	PE107553
15462863	PPA GF33 HS	Green	5D	064-U-005-1-D02	PE107554
15462864	PPA GF33 HS	Dark Blue	5E	064-U-005-1-E02	PE107555
15462865	PPA GF33 HS	Natural	5F	064-U-005-1-F02	PE107556

This catalog includes products which are not yet production released.
All catalog parts are available from low volume tooling.
Many catalog parts are available from high volume production tooling.
For parts availability, lead times and additional product information, contact Delphi Connection Systems at 248.813.2334.

NOTE: Specifications in this catalog are for general reference only and are subject to change without notice. To verify product information, please contact a Delphi representative.

Peters de Laet
503-661-5088 – phone 503-661-5328 – fax
www.pdel.com

064 Header
One-Row – Single Module

5-way Unsealed - Straight

Shown: Index 5A

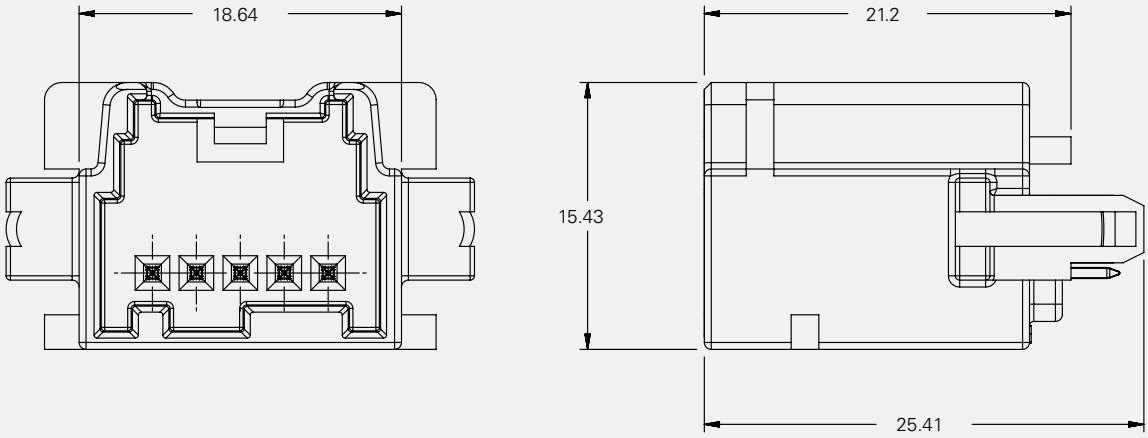

Dimensions shown in millimeters.

Part Number	Material	Color	Index	USCAR Cross-Reference	Mating Connector
					MicroHVT
15462829	PPA GF33 HS	Black	5A	064-U-005-1-A02	PE107551
15462830	PPA GF33 HS	Gray	5B	064-U-005-1-B02	PE107552
15462831	PPA GF33 HS	Brown	5C	064-U-005-1-C02	PE107553
15462832	PPA GF33 HS	Green	5D	064-U-005-1-D02	PE107554
15462833	PPA GF33 HS	Dark Blue	5E	064-U-005-1-E02	PE107555
15462834	PPA GF33 HS	Natural	5F	064-U-005-1-F02	PE107556

This catalog includes products which are not yet production released.
All catalog parts are available from low volume tooling.
Many catalog parts are available from high volume production tooling.
For parts availability, lead times and additional product information, contact Delphi Connection Systems at 248.813.2334.

NOTE: Specifications in this catalog are for general reference only and are subject to change without notice. To verify product information, please contact a Delphi representative.

Peters de Laet
503-661-5088 – phone 503-661-5328 – fax
www.pdel.com

064 Header
One-Row – Single Module

6-way Unsealed - Right Angle

Shown: Index 6A

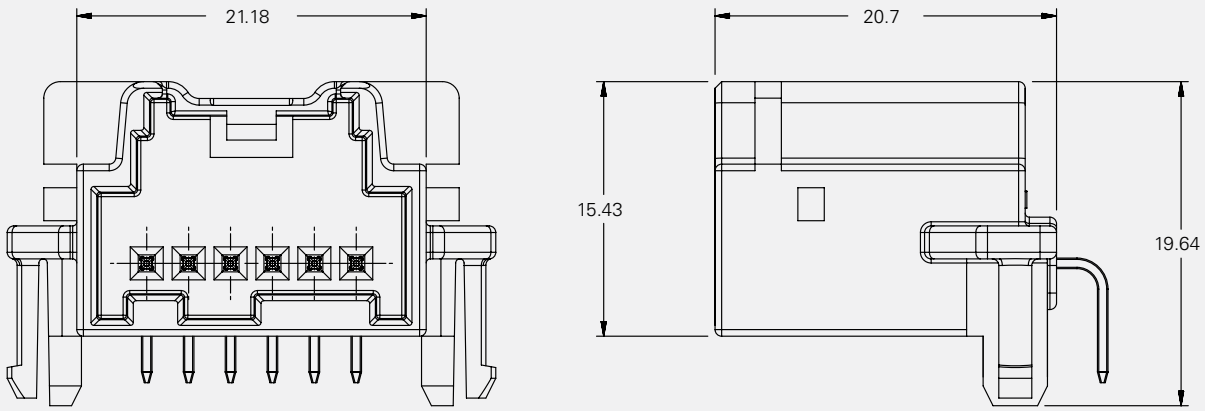

Dimensions shown in millimeters.

Part Number	Material	Color	Index	USCAR Cross-Reference	Mating Connector
					MicroHVT
15462866	PPA GF33 HS	Black	6A	064-U-006-1-A02	15499927
15462867	PPA GF33 HS	Gray	6B	064-U-006-1-B02	PE107558
15462868	PPA GF33 HS	Brown	6C	064-U-006-1-C02	PE107559
15462869	PPA GF33 HS	Green	6D	064-U-006-1-D02	PE107560
15462870	PPA GF33 HS	Dark Blue	6E	064-U-006-1-E02	PE107561
15462871	PPA GF33 HS	Natural	6F	064-U-006-1-F02	PE107562

This catalog includes products which are not yet production released.
All catalog parts are available from low volume tooling.
Many catalog parts are available from high volume production tooling.
For parts availability, lead times and additional product information, contact Delphi Connection Systems at 248.813.2334.

NOTE: Specifications in this catalog are for general reference only and are subject to change without notice. To verify product information, please contact a Delphi representative.

Peters de Laet
503-661-5088 – phone 503-661-5328 – fax
www.pdel.com

064 Header
One-Row – Single Module

6-way Unsealed - Straight

Shown: Index 6A

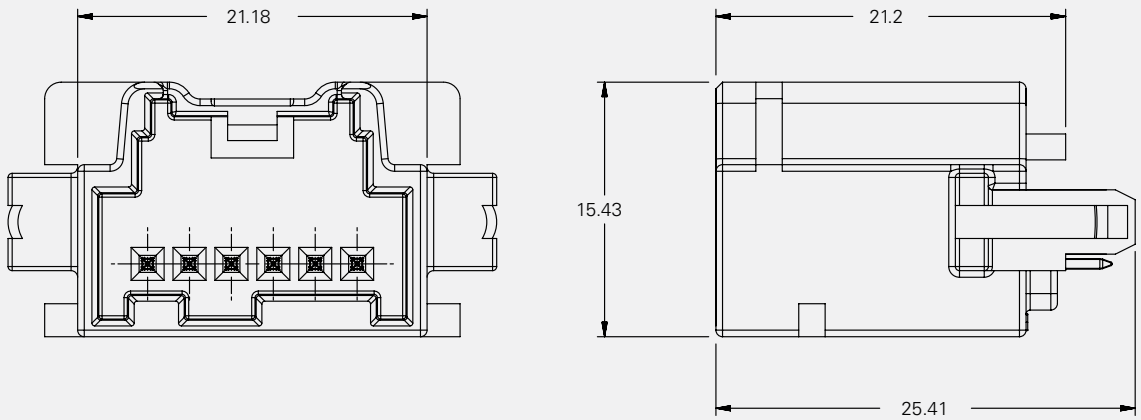

Dimensions shown in millimeters.

Part Number	Material	Color	Index	USCAR Cross-Reference	Mating Connector
					MicroHVT
15462835	PPA GF33 HS	Black	6A	064-U-006-1-A02	15499927
15462836	PPA GF33 HS	Gray	6B	064-U-006-1-B02	PE107558
15462837	PPA GF33 HS	Brown	6C	064-U-006-1-C02	PE107559
15462838	PPA GF33 HS	Green	6D	064-U-006-1-D02	PE107560
15462839	PPA GF33 HS	Dark Blue	6E	064-U-006-1-E02	PE107561
15462840	PPA GF33 HS	Natural	6F	064-U-006-1-F02	PE107562

This catalog includes products which are not yet production released.
All catalog parts are available from low volume tooling.
Many catalog parts are available from high volume production tooling.
For parts availability, lead times and additional product information, contact Delphi Connection Systems at 248.813.2334.

NOTE: Specifications in this catalog are for general reference only and are subject to change without notice. To verify product information, please contact a Delphi representative.

Peters de Laet
503-661-5088 – phone 503-661-5328 – fax
www.pdel.com

064 Header
One-Row – Single Module

7-way Unsealed - Right Angle

Shown: Index 7A

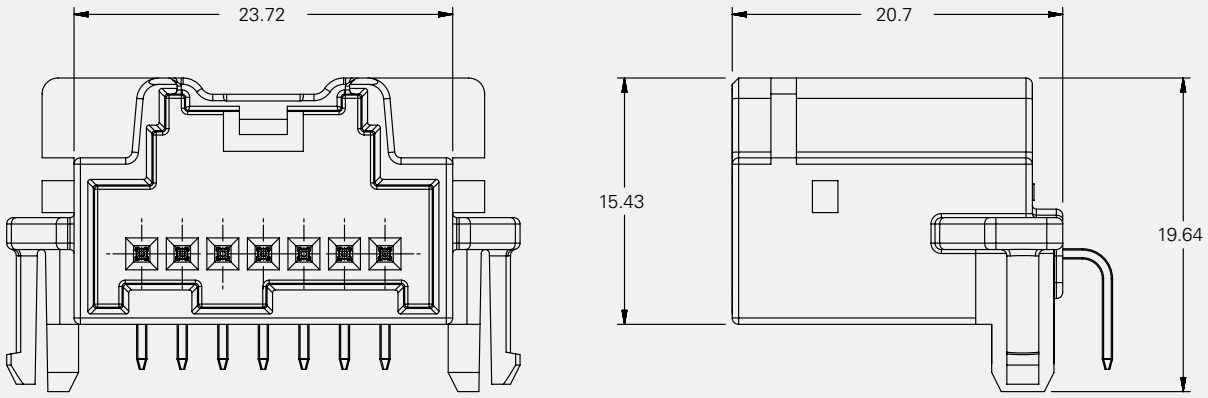

Dimensions shown in millimeters.

Part Number	Material	Color	Index	USCAR Cross-Reference	Mating Connector
					MicroHVT
15462872	PPA GF33 HS	Black	7A	064-U-007-1-A02	PE107563
15462873	PPA GF33 HS	Gray	7B	064-U-007-1-B02	PE107564
15462874	PPA GF33 HS	Brown	7C	064-U-007-1-C02	PE107565
15462875	PPA GF33 HS	Green	7D	064-U-007-1-D02	PE107566
15462876	PPA GF33 HS	Dark Blue	7E	064-U-007-1-E02	PE107567
15462877	PPA GF33 HS	Natural	7F	064-U-007-1-F02	PE107568

This catalog includes products which are not yet production released.
All catalog parts are available from low volume tooling.
Many catalog parts are available from high volume production tooling.
For parts availability, lead times and additional product information, contact Delphi Connection Systems at 248.813.2334.

NOTE: Specifications in this catalog are for general reference only and are subject to change without notice. To verify product information, please contact a Delphi representative.

Peters de Laet
503-661-5088 – phone 503-661-5328 – fax
www.pdel.com

064 Header
One-Row – Single Module

7-way Unsealed - Straight

Shown: Index 7A

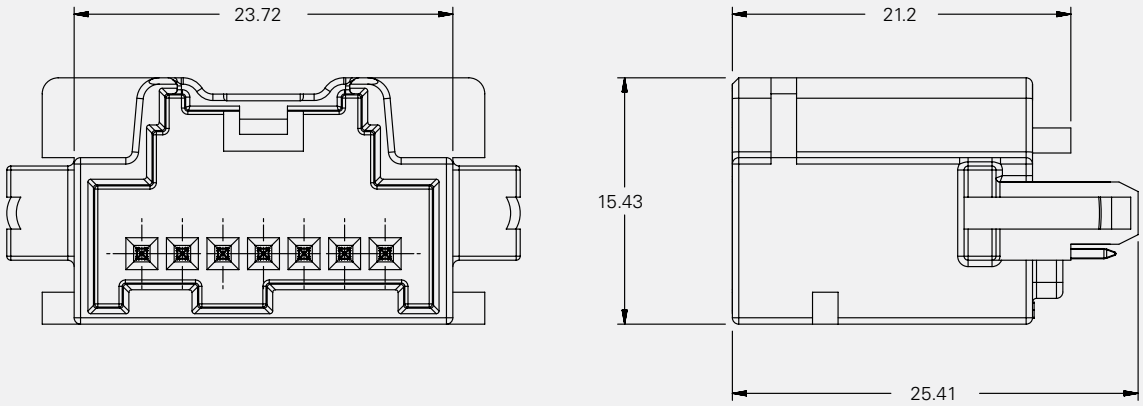

Dimensions shown in millimeters.

Part Number	Material	Color	Index	USCAR Cross-Reference	Mating Connector
					MicroHVT
15462841	PPA GF33 HS	Black	7A	064-U-007-1-A02	PE107563
15462842	PPA GF33 HS	Gray	7B	064-U-007-1-B02	PE107564
15462843	PPA GF33 HS	Brown	7C	064-U-007-1-C02	PE107565
15462844	PPA GF33 HS	Green	7D	064-U-007-1-D02	PE107566
15462845	PPA GF33 HS	Dark Blue	7E	064-U-007-1-E02	PE107567
15462846	PPA GF33 HS	Natural	7F	064-U-007-1-F02	PE107568

This catalog includes products which are not yet production released.
All catalog parts are available from low volume tooling.
Many catalog parts are available from high volume production tooling.
For parts availability, lead times and additional product information, contact Delphi Connection Systems at 248.813.2334.

NOTE: Specifications in this catalog are for general reference only and are subject to change without notice. To verify product information, please contact a Delphi representative.

Peters de Laet
503-661-5088 – phone 503-661-5328 – fax
www.pdel.com

064 Header
One-Row – Single Module

8-way & 12-way Unsealed - Right Angle

Shown: Index 8A

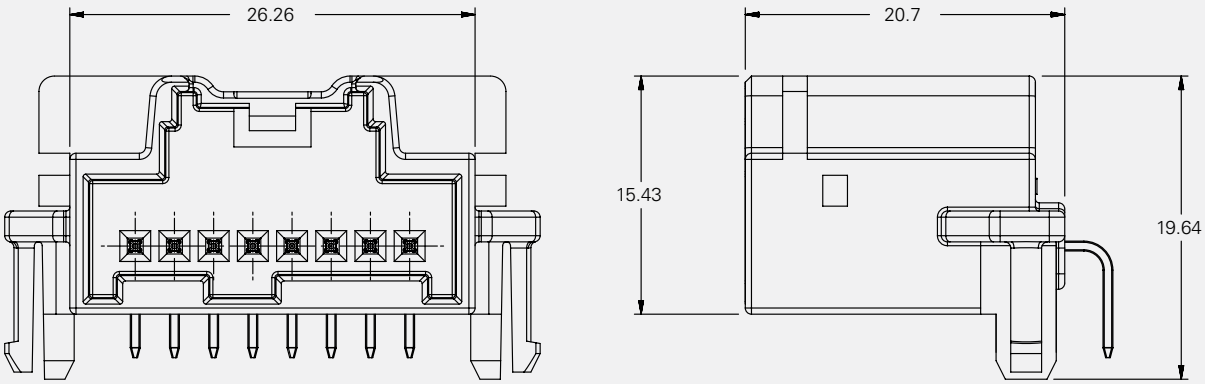

Dimensions shown in millimeters.

Part Number	Material	Color	Index	USCAR Cross-Reference	Mating Connector MicroHVT
15462878	PPA GF33 HS	Black	8A	064-U-008-1-A02	13513470
15462879	PPA GF33 HS	Gray	8B	064-U-008-1-B02	PE107570
15462880	PPA GF33 HS	Brown	8C	064-U-008-1-C02	PE107571
15462881	PPA GF33 HS	Green	8D	064-U-008-1-D02	PE107572
15462882	PPA GF33 HS	Dark Blue	8E	064-U-008-1-E02	PE107573
15462883	PPA GF33 HS	Natural	8F	064-U-008-1-F02	PE107574
PE132123	PBT GF30	Black	12A	064-U-012-1-A02	PE135078

This catalog includes products which are not yet production released.
All catalog parts are available from low volume tooling.
Many catalog parts are available from high volume production tooling.
For parts availability, lead times and additional product information, contact Delphi Connection Systems at 248.813.2334.

NOTE: Specifications in this catalog are for general reference only and are subject to change without notice. To verify product information, please contact a Delphi representative.

Peters de Laet
503-661-5088 – phone 503-661-5328 – fax
www.pdel.com

064 Header
One-Row – Single Module

8-way Unsealed - Straight

Shown: Index 8A

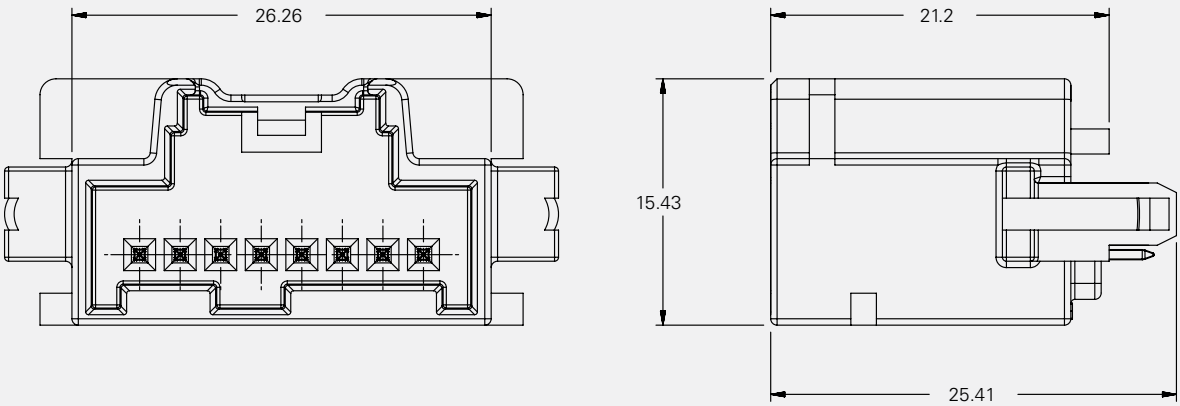

Dimensions shown in millimeters.

Part Number	Material	Color	Index	USCAR Cross-Reference	Mating Connector
					MicroHVT
15462847	PPA GF33 HS	Black	8A	064-U-008-1-A02	13513470
15462848	PPA GF33 HS	Gray	8B	064-U-008-1-B02	PE107570
15462849	PPA GF33 HS	Brown	8C	064-U-008-1-C02	PE107571
15462850	PPA GF33 HS	Green	8D	064-U-008-1-D02	PE107572
15462851	PPA GF33 HS	Dark Blue	8E	064-U-008-1-E02	PE107573
15462852	PPA GF33 HS	Natural	8F	064-U-008-1-F02	PE107574

This catalog includes products which are not yet production released.
All catalog parts are available from low volume tooling.
Many catalog parts are available from high volume production tooling.
For parts availability, lead times and additional product information, contact Delphi Connection Systems at 248.813.2334.

NOTE: Specifications in this catalog are for general reference only and are subject to change without notice. To verify product information, please contact a Delphi representative.

Peters de Laet
503-661-5088 – phone 503-661-5328 – fax
www.pdel.com

064 Header
One-Row – Combination Modules

16-way Unsealed - Right Angle

Shown: Index 8A + 8B

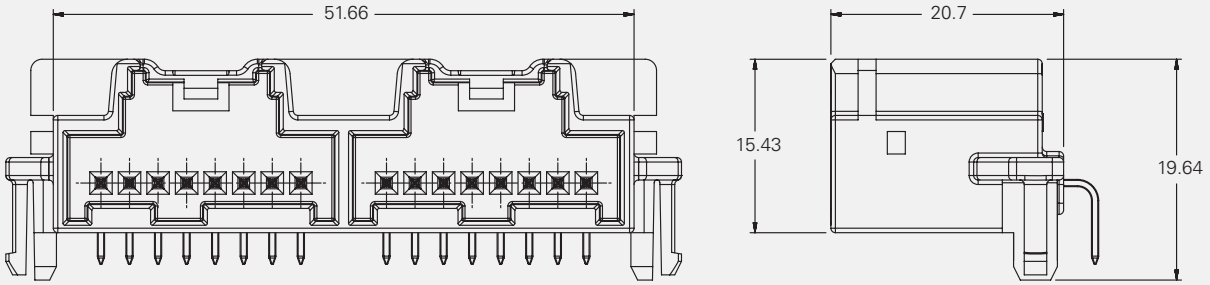

Dimensions shown in millimeters.

Part Number	Material	Color	Module	Index	USCAR Cross-Reference	Mating Connector
						MicroHVT
PE119312	PPA GF33 HS	Black	Module 1	8A	064-U-008-1-A02	13513470
			Module 2	8B	064-U-008-1-B02	PE107570

This catalog includes products which are not yet production released.
All catalog parts are available from low volume tooling.
Many catalog parts are available from high volume production tooling.
For parts availability, lead times and additional product information, contact Delphi Connection Systems at 248.813.2334.

NOTE: Specifications in this catalog are for general reference only and are subject to change without notice. To verify product information, please contact a Delphi representative.

Peters de Laet
503-661-5088 – phone 503-661-5328 – fax
www.pdel.com

064 Header
One-Row – Combination Modules

16-way Unsealed - Straight

Shown: Index 8A + 8B

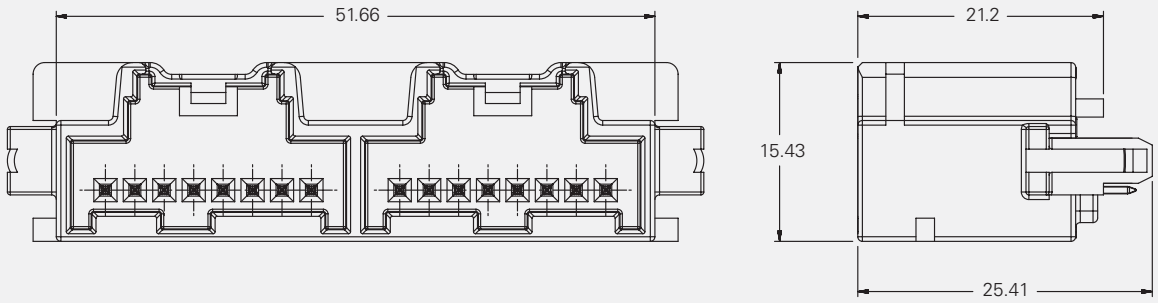

Dimensions shown in millimeters.

Part Number	Material	Color	Module	Index	USCAR Cross-Reference	Mating Connector
						MicroHVT
PE119310	PPA GF33 HS	Black	Module 1	8A	064-U-008-1-A02	13513470
			Module 2	8B	064-U-008-1-B02	PE107570

This catalog includes products which are not yet production released.
All catalog parts are available from low volume tooling.
Many catalog parts are available from high volume production tooling.
For parts availability, lead times and additional product information, contact Delphi Connection Systems at 248.813.2334.

NOTE: Specifications in this catalog are for general reference only and are subject to change without notice. To verify product information, please contact a Delphi representative.

Peters de Laet
503-661-5088 – phone 503-661-5328 – fax
www.pdel.com

064 Header
One-Row – Combination Modules

24-way Unsealed - Right Angle

Shown: Index 8A + 8B + 8C

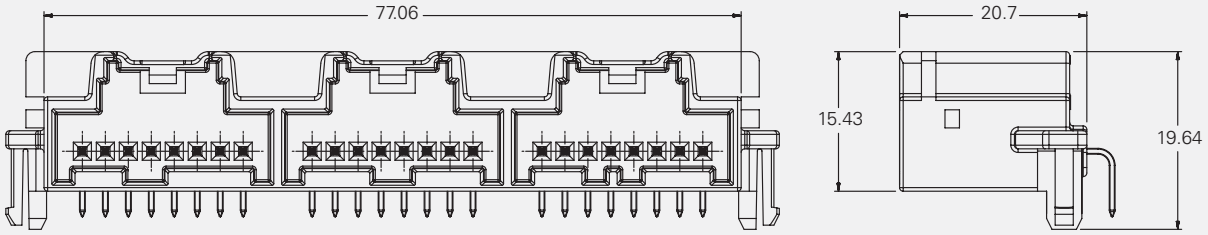

Dimensions shown in millimeters.

Part Number	Material	Color	Module	Index	USCAR Cross-Reference	Mating Connector
						MicroHVT
PE116301	PPA GF33 HS	Black	Module 1	8A	064-U-008-1-A02	13513470
			Module 2	8B	064-U-008-1-B02	PE107570
			Module 3	8C	064-U-008-1-C02	PE107571

This catalog includes products which are not yet production released.
All catalog parts are available from low volume tooling.
Many catalog parts are available from high volume production tooling.
For parts availability, lead times and additional product information, contact Delphi Connection Systems at 248.813.2334.

NOTE: Specifications in this catalog are for general reference only and are subject to change without notice. To verify product information, please contact a Delphi representative.

Peters de Laet
503-661-5088 – phone 503-661-5328 – fax
www.pdel.com

064 Header
One-Row – Combination Modules

24-way Unsealed - Straight

Shown: Index 8A + 8B + 8C

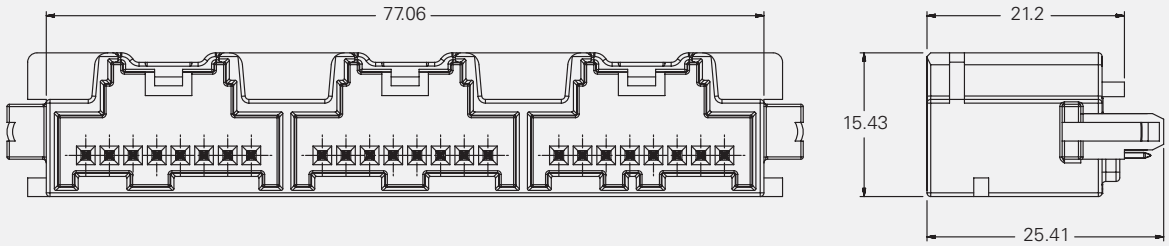

Dimensions shown in millimeters.

Part Number	Material	Color	Module	Index	USCAR Cross-Reference	Mating Connector
						MicroHVT
PE116303	PPA GF33 HS	Black	Module 1	8A	064-U-008-1-A02	13513470
			Module 2	8B	064-U-008-1-B02	PE107570
			Module 3	8C	064-U-008-1-C02	PE107571

This catalog includes products which are not yet production released.
All catalog parts are available from low volume tooling.
Many catalog parts are available from high volume production tooling.
For parts availability, lead times and additional product information, contact Delphi Connection Systems at 248.813.2334.

NOTE: Specifications in this catalog are for general reference only and are subject to change without notice. To verify product information, please contact a Delphi representative.

Peters de Laet
503-661-5088 – phone 503-661-5328 – fax
www.pdel.com

064 Header
One-Row – Combination Modules

32-way Unsealed - Right Angle

Shown: Index 8A + 8B + 8C + 8D

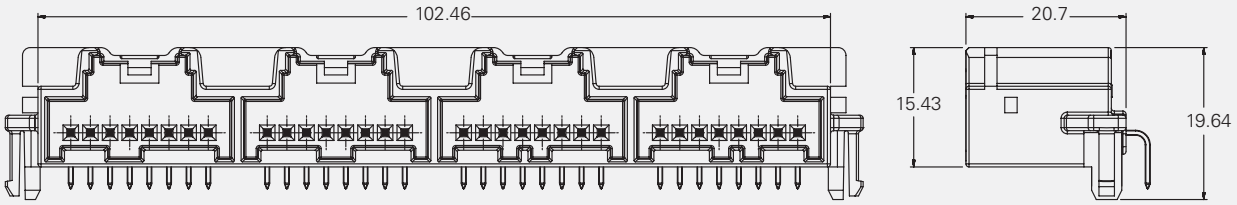

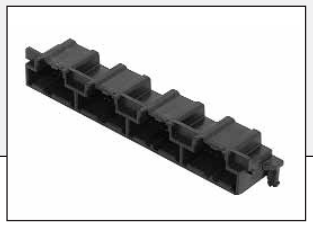

Dimensions shown in millimeters.

Part Number	Material	Color	Module	Index	USCAR Cross-Reference	Mating Connector
						MicroHVT
PE119316	PPA GF33 HS	Black	Module 1	8A	064-U-008-1-A02	13513470
			Module 2	8B	064-U-008-1-B02	PE107570
			Module 3	8C	064-U-008-1-C02	PE107571
			Module 4	8D	064-U-008-1-D02	PE107572

This catalog includes products which are not yet production released.
All catalog parts are available from low volume tooling.
Many catalog parts are available from high volume production tooling.
For parts availability, lead times and additional product information, contact Delphi Connection Systems at 248.813.2334.

NOTE: Specifications in this catalog are for general reference only and are subject to change without notice. To verify product information, please contact a Delphi representative.

Peters de Laet
503-661-5088 – phone 503-661-5328 – fax
www.pdel.com

064 Header
One-Row – Combination Modules

32-way Unsealed - Straight

Shown: Index 8A + 8B + 8C + 8D

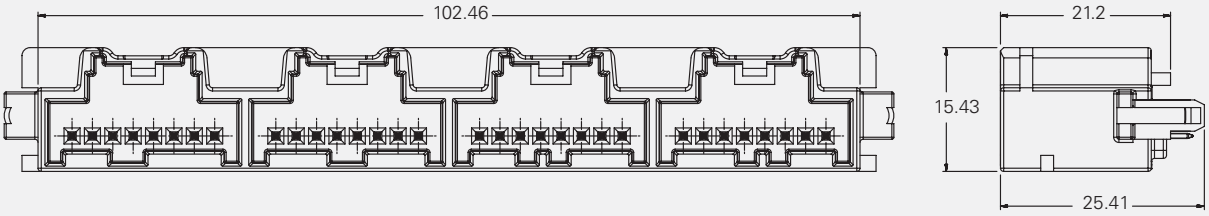

Dimensions shown in millimeters.

Part Number	Material	Color	Module	Index	USCAR Cross-Reference	Mating Connector
						MicroHVT
PE119314	PPA GF33 HS	Black	Module 1	8A	064-U-008-1-A02	13513470
			Module 2	8B	064-U-008-1-B02	PE107570
			Module 3	8C	064-U-008-1-C02	PE107571
			Module 4	8D	064-U-008-1-D02	PE107572

This catalog includes products which are not yet production released.
All catalog parts are available from low volume tooling.
Many catalog parts are available from high volume production tooling.
For parts availability, lead times and additional product information, contact Delphi Connection Systems at 248.813.2334.

NOTE: Specifications in this catalog are for general reference only and are subject to change without notice. To verify product information, please contact a Delphi representative.

Peters de Laet
503-661-5088 – phone 503-661-5328 – fax
www.pdel.com

064 Header
Two-Row – Single Module

8-way Unsealed - Right Angle

Shown: Index 8A

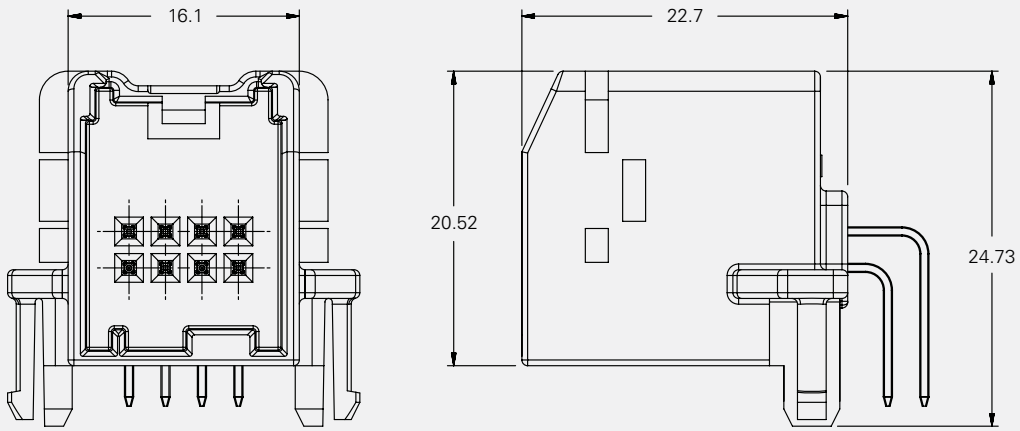

Dimensions shown in millimeters.

Part Number	Material	Color	Index	USCAR Cross-Reference	Mating Connector	
					MicroHVT	Micro64
15420150	PPA GF33 HS	Black	8A	064-U-008-2-A02	PE107576	15406141
15420151	PPA GF33 HS	Gray	8B	064-U-008-2-B02	PE107577	15406142
15420152	PPA GF33 HS	Brown	8C	064-U-008-2-C02	PE107578	–
15420153	PPA GF33 HS	Green	8D	064-U-008-2-D02	PE107579	–
15420154	PPA GF33 HS	Dark Blue	8E	064-U-008-2-E02	PE107580	–
15420155	PPA GF33 HS	Natural	8F	064-U-008-2-F02	PE107581	–

This catalog includes products which are not yet production released.
All catalog parts are available from low volume tooling.
Many catalog parts are available from high volume production tooling.
For parts availability, lead times and additional product information, contact Delphi Connection Systems at 248.813.2334.

NOTE: Specifications in this catalog are for general reference only and are subject to change without notice. To verify product information, please contact a Delphi representative.

Peters de Laet
503-661-5088 – phone 503-661-5328 – fax
www.pdel.com

064 Header
Two-Row – Single Module

8-way Unsealed - Straight

Shown: Index 8A

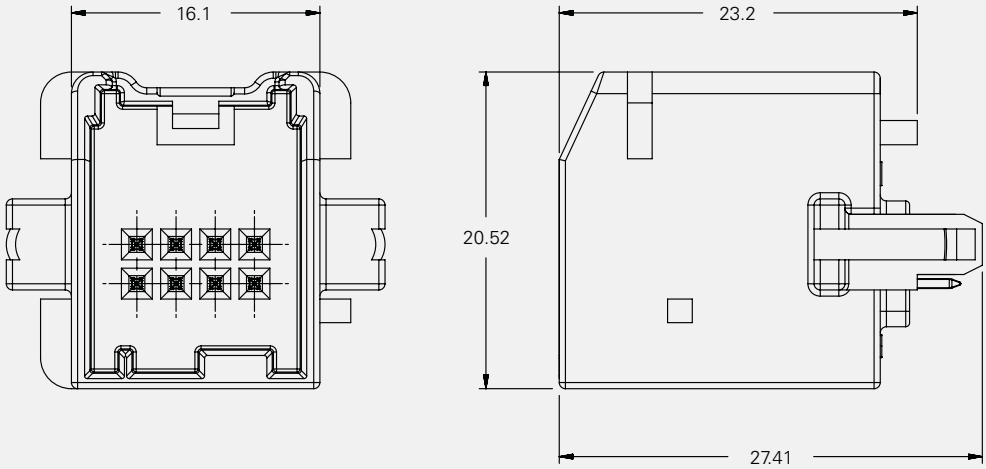

Dimensions shown in millimeters.

Part Number	Material	Color	Index	USCAR Cross-Reference	Mating Connector	
					MicroHVT	Micro64
15423716	PPA GF33 HS	Black	8A	064-U-008-2-A02	PE107576	15406141
15423717	PPA GF33 HS	Gray	8B	064-U-008-2-B02	PE107577	15406142
15423718	PPA GF33 HS	Brown	8C	064-U-008-2-C02	PE107578	–
15423719	PPA GF33 HS	Green	8D	064-U-008-2-D02	PE107579	–
15423720	PPA GF33 HS	Dark Blue	8E	064-U-008-2-E02	PE107580	–
15423721	PPA GF33 HS	Natural	8F	064-U-008-2-F02	PE107581	–

This catalog includes products which are not yet production released.
All catalog parts are available from low volume tooling.
Many catalog parts are available from high volume production tooling.
For parts availability, lead times and additional product information, contact Delphi Connection Systems at 248.813.2334.

NOTE: Specifications in this catalog are for general reference only and are subject to change without notice. To verify product information, please contact a Delphi representative.

Peters de Laet
503-661-5088 – phone 503-661-5328 – fax
www.pdel.com

064 Header
Two-Row – Single Module

10-way Unsealed - Right Angle

Shown: Index 10A

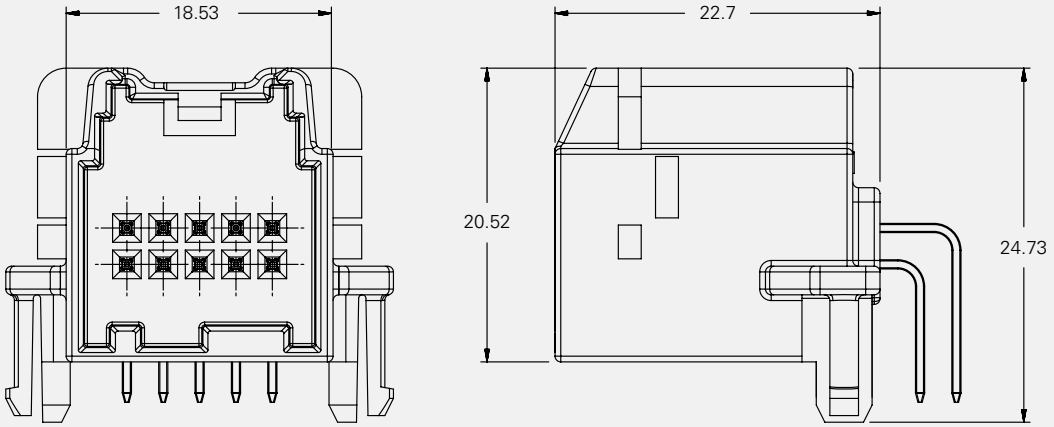

Dimensions shown in millimeters.

Part Number	Material	Color	Index	USCAR Cross-Reference	Mating Connector	
					MicroHVT	Micro64
15420156	PPA GF33 HS	Black	10A	064-U-010-2-A02	PE107582	15431080
15420157	PPA GF33 HS	Gray	10B	064-U-010-2-B02	PE107583	15431081
15420158	PPA GF33 HS	Brown	10C	064-U-010-2-C02	PE107584	–
15420159	PPA GF33 HS	Green	10D	064-U-010-2-D02	PE107585	–
15420160	PPA GF33 HS	Dark Blue	10E	064-U-010-2-E02	PE107586	–
15420161	PPA GF33 HS	Natural	10F	064-U-010-2-F02	PE107587	–

This catalog includes products which are not yet production released.
All catalog parts are available from low volume tooling.
Many catalog parts are available from high volume production tooling.
For parts availability, lead times and additional product information, contact Delphi Connection Systems at 248.813.2334.

NOTE: Specifications in this catalog are for general reference only and are subject to change without notice. To verify product information, please contact a Delphi representative.

Peters de Laet
503-661-5088 – phone 503-661-5328 – fax
www.pdel.com

064 Header
Two-Row – Single Module

10-way Unsealed - Straight

Shown: Index 10A

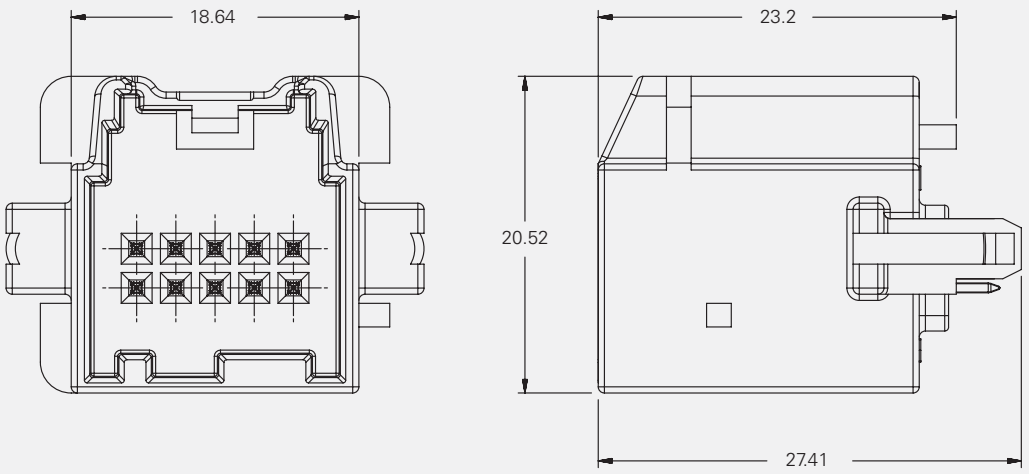

Dimensions shown in millimeters.

Part Number	Material	Color	Index	USCAR Cross-Reference	Mating Connector	
					MicroHVT	Micro64
15423722	PPA GF33 HS	Black	10A	064-U-010-2-A02	PE107582	15431080
15423723	PPA GF33 HS	Gray	10B	064-U-010-2-B02	PE107583	15431081
15423724	PPA GF33 HS	Brown	10C	064-U-010-2-C02	PE107584	–
15423725	PPA GF33 HS	Green	10D	064-U-010-2-D02	PE107585	–
15423726	PPA GF33 HS	Dark Blue	10E	064-U-010-2-E02	PE107586	–
15423727	PPA GF33 HS	Natural	10F	064-U-010-2-F02	PE107587	–

This catalog includes products which are not yet production released.
All catalog parts are available from low volume tooling.
Many catalog parts are available from high volume production tooling.
For parts availability, lead times and additional product information, contact Delphi Connection Systems at 248.813.2334.

NOTE: Specifications in this catalog are for general reference only and are subject to change without notice. To verify product information, please contact a Delphi representative.

Peters de Laet
503-661-5088 – phone 503-661-5328 – fax
www.pdel.com

064 Header
Two-Row – Single Module

12-way Unsealed - Right Angle

Shown: Index 12A

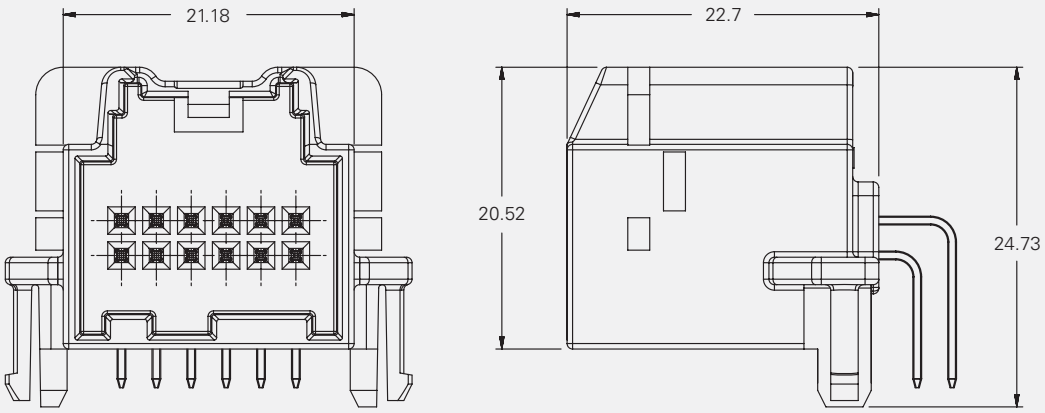

Dimensions shown in millimeters.

Part Number	Material	Color	Index	USCAR Cross-Reference	Mating Connector
					MicroHVT
15420162	PPA GF33 HS	Black	12A	064-U-012-2-A02	15483208
15420163	PPA GF33 HS	Gray	12B	064-U-012-2-B02	PE107589
15420164	PPA GF33 HS	Brown	12C	064-U-012-2-C02	PE107590
15420165	PPA GF33 HS	Green	12D	064-U-012-2-D02	PE107591
15420166	PPA GF33 HS	Dark Blue	12E	064-U-012-2-E02	PE107592
15420167	PPA GF33 HS	Natural	12F	064-U-012-2-F02	PE107593

This catalog includes products which are not yet production released.
All catalog parts are available from low volume tooling.
Many catalog parts are available from high volume production tooling.
For parts availability, lead times and additional product information, contact Delphi Connection Systems at 248.813.2334.

NOTE: Specifications in this catalog are for general reference only and are subject to change without notice. To verify product information, please contact a Delphi representative.

Peters de Laet
503-661-5088 – phone 503-661-5328 – fax
www.pdel.com

064 Header
Two-Row – Single Module

12-way Unsealed - Straight

Shown: Index 12A

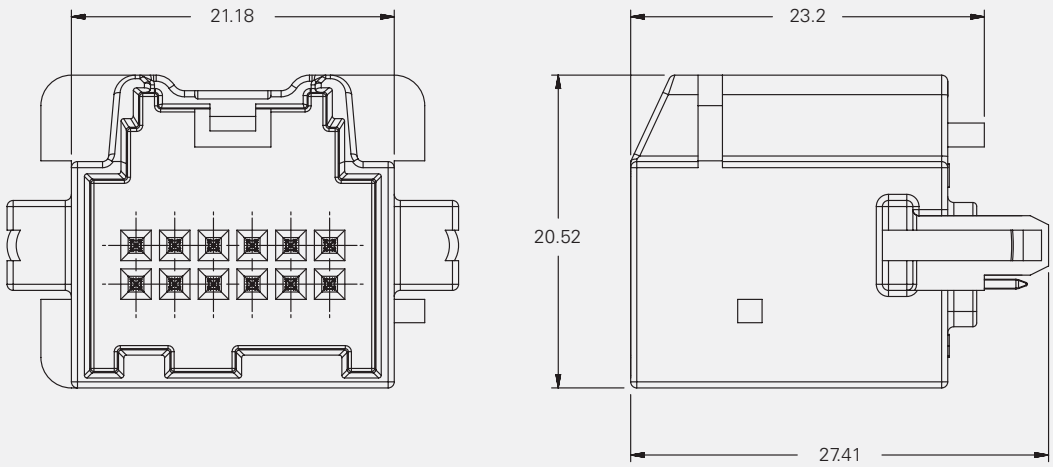

Dimensions shown in millimeters.

Part Number	Material	Color	Index	USCAR Cross-Reference	Mating Connector
					MicroHVT
15423728	PPA GF33 HS	Black	12A	064-U-012-2-A02	15483208
15423729	PPA GF33 HS	Gray	12B	064-U-012-2-B02	PE107589
15423730	PPA GF33 HS	Brown	12C	064-U-012-2-C02	PE107590
15423731	PPA GF33 HS	Green	12D	064-U-012-2-D02	PE107591
15423732	PPA GF33 HS	Dark Blue	12E	064-U-012-2-E02	PE107592
15423733	PPA GF33 HS	Natural	12F	064-U-012-2-F02	PE107593

This catalog includes products which are not yet production released.
All catalog parts are available from low volume tooling.
Many catalog parts are available from high volume production tooling.
For parts availability, lead times and additional product information, contact Delphi Connection Systems at 248.813.2334.

NOTE: Specifications in this catalog are for general reference only and are subject to change without notice. To verify product information, please contact a Delphi representative.

Peters de Laet
503-661-5088 – phone 503-661-5328 – fax
www.pdel.com

064 Header
Two-Row – Single Module

16-way Unsealed - Right Angle

Shown: Index 16A

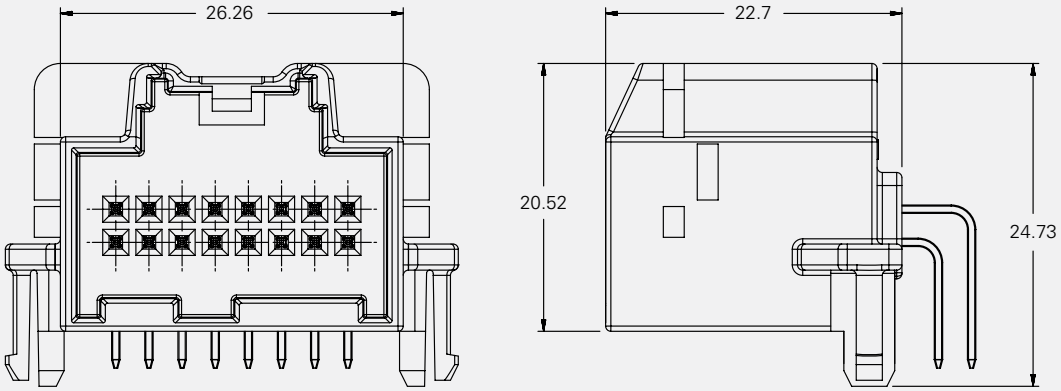

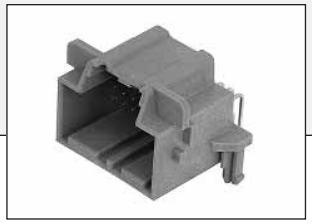

Dimensions shown in millimeters.

Part Number	Material	Color	Index	USCAR Cross-Reference	Mating Connector	
					MicroHVT	Micro64
15420168	PPA GF33 HS	Black	16A	064-U-016-2-A02	PE107600	15394150
15420169	PPA GF33 HS	Gray	16B	064-U-016-2-B02	PE107601	15394149
15420170	PPA GF33 HS	Brown	16C	064-U-016-2-C02	PE107602	15394151
15420171	PPA GF33 HS	Green	16D	064-U-016-2-D02	PE107603	15394152
15420172	PPA GF33 HS	Dark Blue	16E	064-U-016-2-E02	PE107604	15394153
15420173	PPA GF33 HS	Natural	16F	064-U-016-2-F02	PE107605	15394154

This catalog includes products which are not yet production released.
All catalog parts are available from low volume tooling.
Many catalog parts are available from high volume production tooling.
For parts availability, lead times and additional product information, contact Delphi Connection Systems at 248.813.2334.

NOTE: Specifications in this catalog are for general reference only and are subject to change without notice. To verify product information, please contact a Delphi representative.

Peters de Laet
503-661-5088 – phone 503-661-5328 – fax
www.pdel.com

064 Header
Two-Row – Single Module

16-way Unsealed - Straight

Shown: Index 16A

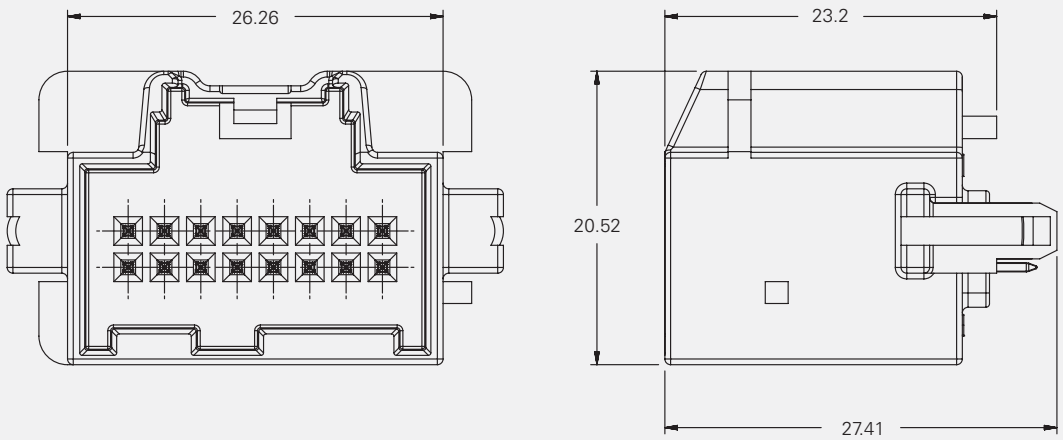

Dimensions shown in millimeters.

Part Number	Material	Color	Index	USCAR Cross-Reference	Mating Connector	
					MicroHVT	Micro64
15423734	PPA GF33 HS	Black	16A	064-U-016-2-A02	PE107600	15394150
15496639	PPA GF33 HS	Gray	16B	064-U-016-2-B02	PE107601	15394149
15423736	PPA GF33 HS	Brown	16C	064-U-016-2-C02	PE107602	15394151
15423737	PPA GF33 HS	Green	16D	064-U-016-2-D02	PE107603	15394152
15423738	PPA GF33 HS	Dark Blue	16E	064-U-016-2-E02	PE107604	15394153
15423739	PPA GF33 HS	Natural	16F	064-U-016-2-F02	PE107605	15394154

This catalog includes products which are not yet production released.
All catalog parts are available from low volume tooling.
Many catalog parts are available from high volume production tooling.
For parts availability, lead times and additional product information, contact Delphi Connection Systems at 248.813.2334.

NOTE: Specifications in this catalog are for general reference only and are subject to change without notice. To verify product information, please contact a Delphi representative.

Peters de Laet
503-661-5088 – phone 503-661-5328 – fax
www.pdel.com

064 Header
Two-Row – Combination Modules

16-way Unsealed - Right Angle

Shown: Index 8A + 8B

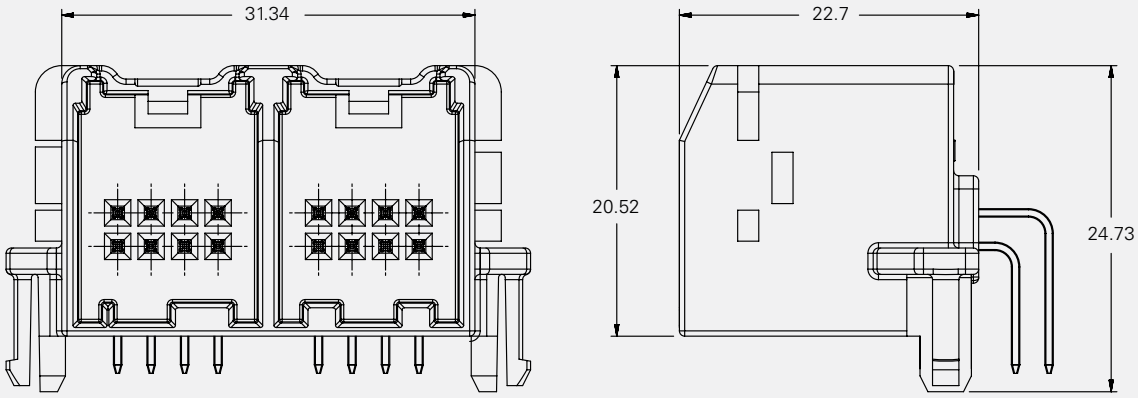

Dimensions shown in millimeters.

Part Number	Material	Color	Module	Index	USCAR Cross-Reference	Mating Connector	
						MicroHVT	Micro64
15430292	PPA GF33 HS	Black	Module 1	8A	064-U-008-2-A02	PE107576	15406141
			Module 2	8B	064-U-008-2-B02	PE107577	15406142

This catalog includes products which are not yet production released.
All catalog parts are available from low volume tooling.
Many catalog parts are available from high volume production tooling.
For parts availability, lead times and additional product information, contact Delphi Connection Systems at 248.813.2334.

NOTE: Specifications in this catalog are for general reference only and are subject to change without notice. To verify product information, please contact a Delphi representative.

Peters de Laet
503-661-5088 – phone 503-661-5328 – fax
www.pdel.com

064 Header
Two-Row – Combination Modules

16-way Unsealed - Straight

Shown: Index 8A + 8B

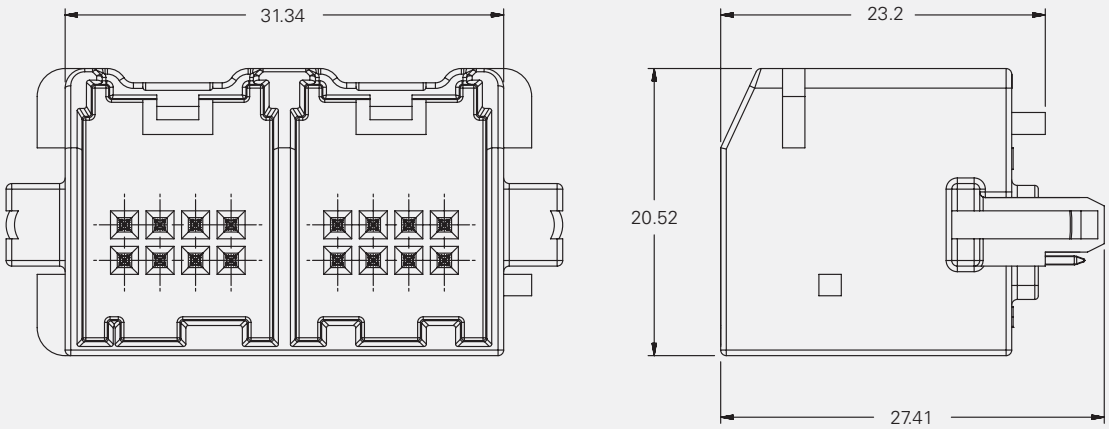

Dimensions shown in millimeters.

Part Number	Material	Color	Module	Index	USCAR Cross-Reference	Mating Connector	
						MicroHVT	Micro64
15430291	PPA GF33 HS	Black	Module 1	8A	064-U-008-2-A02	PE107576	15406141
			Module 2	8B	064-U-008-2-B02	PE107577	15406142

This catalog includes products which are not yet production released.
All catalog parts are available from low volume tooling.
Many catalog parts are available from high volume production tooling.
For parts availability, lead times and additional product information, contact Delphi Connection Systems at 248.813.2334.

NOTE: Specifications in this catalog are for general reference only and are subject to change without notice. To verify product information, please contact a Delphi representative.

Peters de Laet
503-661-5088 – phone 503-661-5328 – fax
www.pdel.com

064 Header
Two-Row – Combination Modules

24-way Unsealed - Right Angle

Shown: Index 8A + 16A

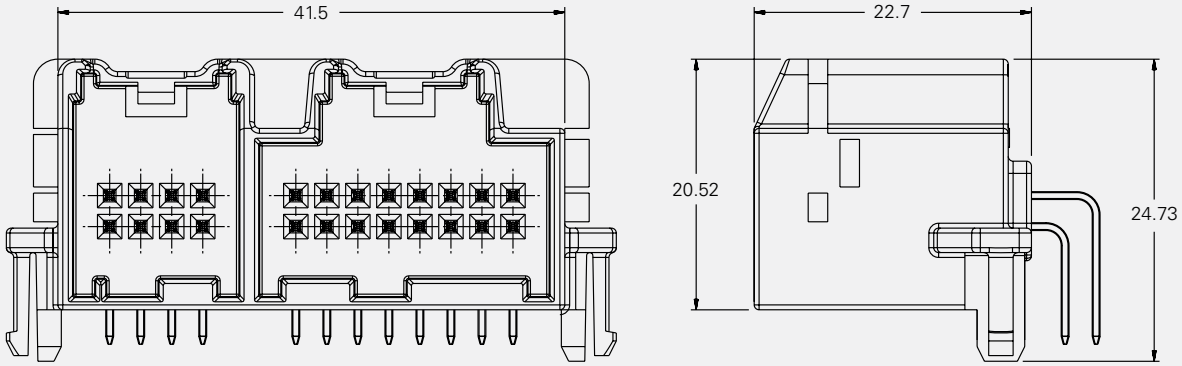

Dimensions shown in millimeters.

Part Number	Material	Color	Module	Index	USCAR Cross-Reference	Mating Connector	
						MicroHVT	Micro64
15435923	PPA GF33 HS	Black	Module 1	8A	064-U-008-2-A02	PE107576	15406141
			Module 2	16A	064-U-016-2-A02	PE107600	15394150

This catalog includes products which are not yet production released.
All catalog parts are available from low volume tooling.
Many catalog parts are available from high volume production tooling.
For parts availability, lead times and additional product information, contact Delphi Connection Systems at 248.813.2334.

NOTE: Specifications in this catalog are for general reference only and are subject to change without notice. To verify product information, please contact a Delphi representative.

Peters de Laet
503-661-5088 – phone 503-661-5328 – fax
www.pdel.com

064 Header
Two-Row – Combination Modules

24-way Unsealed - Straight

Shown: Index 8A + 16A

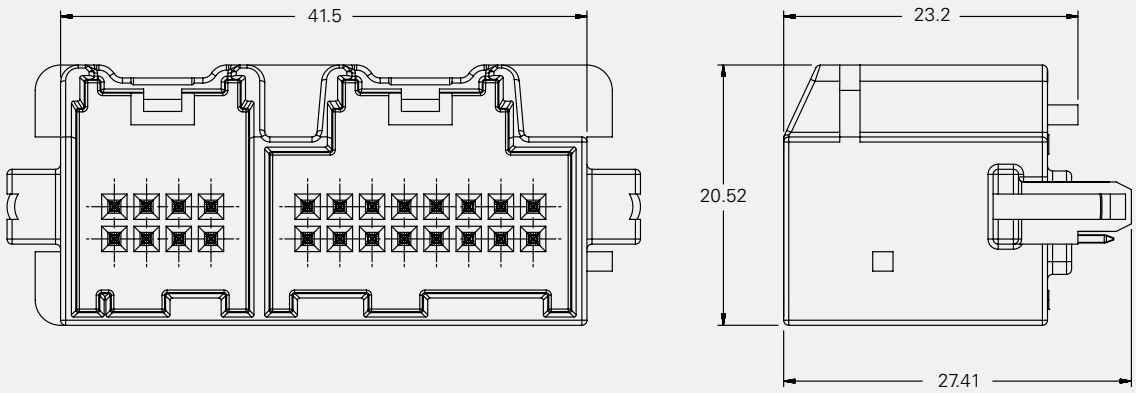

Dimensions shown in millimeters.

Part Number	Material	Color	Module	Index	USCAR Cross-Reference	Mating Connector	
						MicroHVT	Micro64
15437441	PPA GF33 HS	Black	Module 1	8A	064-U-008-2-A02	PE107576	15406141
			Module 2	16A	064-U-016-2-A02	PE107600	15394150

This catalog includes products which are not yet production released.
All catalog parts are available from low volume tooling.
Many catalog parts are available from high volume production tooling.
For parts availability, lead times and additional product information, contact Delphi Connection Systems at 248.813.2334.

NOTE: Specifications in this catalog are for general reference only and are subject to change without notice. To verify product information, please contact a Delphi representative.

Peters de Laet
503-661-5088 – phone 503-661-5328 – fax
www.pdel.com

064 Header
Two-Row – Combination Modules

32-way Unsealed - Right Angle

Shown: Index 16A + 16B

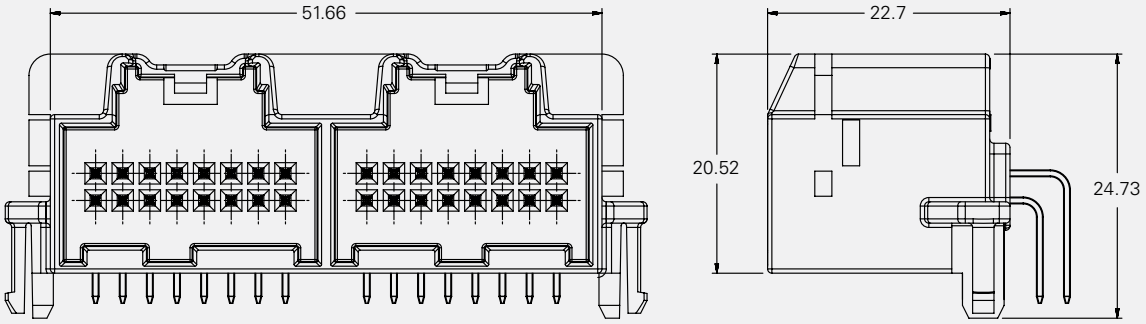

Dimensions shown in millimeters.

Part Number	Material	Color	Module	Index	USCAR Cross-Reference	Mating Connector	
						MicroHVT	Micro64
15423681	PPA GF33 HS	Black	Module 1	16A	064-U-016-2-A02	PE107600	15394150
			Module 2	16B	064-U-016-2-B02	PE107601	15394149

This catalog includes products which are not yet production released.
All catalog parts are available from low volume tooling.
Many catalog parts are available from high volume production tooling.
For parts availability, lead times and additional product information, contact Delphi Connection Systems at 248.813.2334.

NOTE: Specifications in this catalog are for general reference only and are subject to change without notice. To verify product information, please contact a Delphi representative.

Peters de Laet
503-661-5088 – phone 503-661-5328 – fax
www.pdel.com

064 Header
Two-Row – Combination Modules

32-way Unsealed - Straight

Shown: Index 16A + 16B

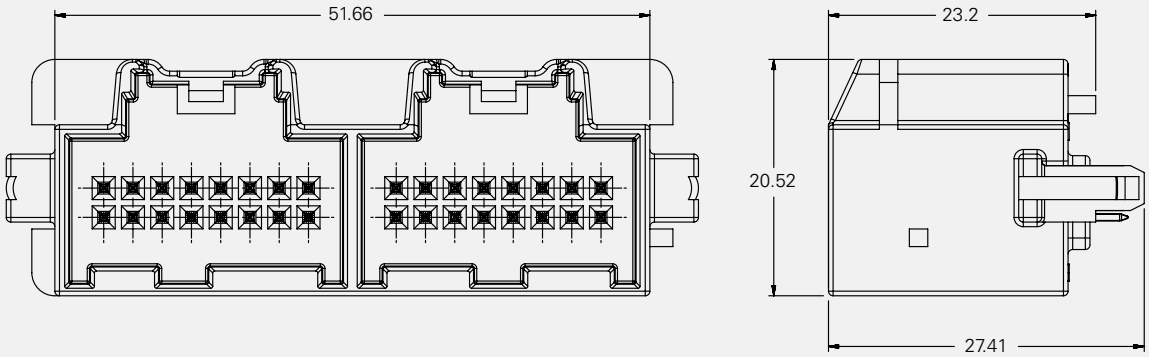

Dimensions shown in millimeters.

Part Number	Material	Color	Module	Index	USCAR Cross-Reference	Mating Connector	
						MicroHVT	Micro64
15423682	PPA GF33 HS	Black	Module 1	16A	064-U-016-2-A02	PE107600	15394150
			Module 2	16B	064-U-016-2-B02	PE107601	15394149

This catalog includes products which are not yet production released.
All catalog parts are available from low volume tooling.
Many catalog parts are available from high volume production tooling.
For parts availability, lead times and additional product information, contact Delphi Connection Systems at 248.813.2334.

NOTE: Specifications in this catalog are for general reference only and are subject to change without notice. To verify product information, please contact a Delphi representative.

Peters de Laet
503-661-5088 – phone 503-661-5328 – fax
www.pdel.com

064 Header
Two-Row – Combination Modules

40-way Unsealed - Right Angle

Shown: Index 8A + 16A + 16B

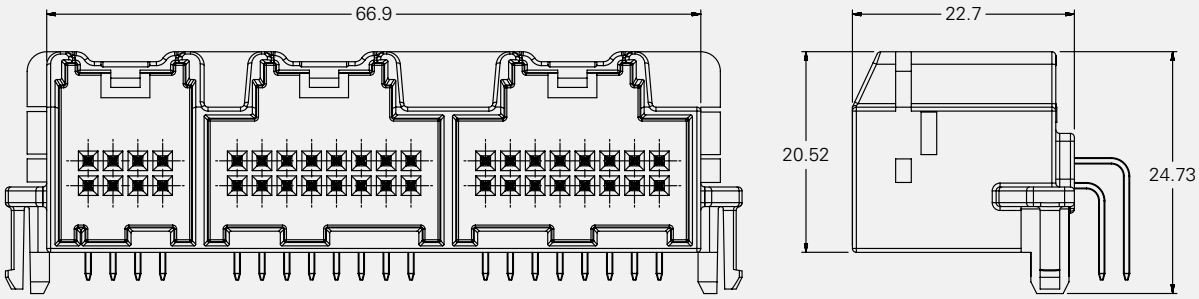

Dimensions shown in millimeters.

Part Number	Material	Color	Module	Index	USCAR Cross-Reference	Mating Connector	
						MicroHVT	Micro64
15422816	PPA GF33 HS	Black	Module 1	8A	064-U-008-2-A02	PE107576	15406141
			Module 2	16A	064-U-016-2-A02	PE107600	15394150
			Module 3	16B	064-U-016-2-B02	PE107601	15394149

This catalog includes products which are not yet production released.
All catalog parts are available from low volume tooling.
Many catalog parts are available from high volume production tooling.
For parts availability, lead times and additional product information, contact Delphi Connection Systems at 248.813.2334.

NOTE: Specifications in this catalog are for general reference only and are subject to change without notice. To verify product information, please contact a Delphi representative.

Peters de Laet
503-661-5088 – phone 503-661-5328 – fax
www.pdel.com

064 Header
Two-Row – Combination Modules

40-way Unsealed - Straight

Shown: Index 8A + 16A + 16B

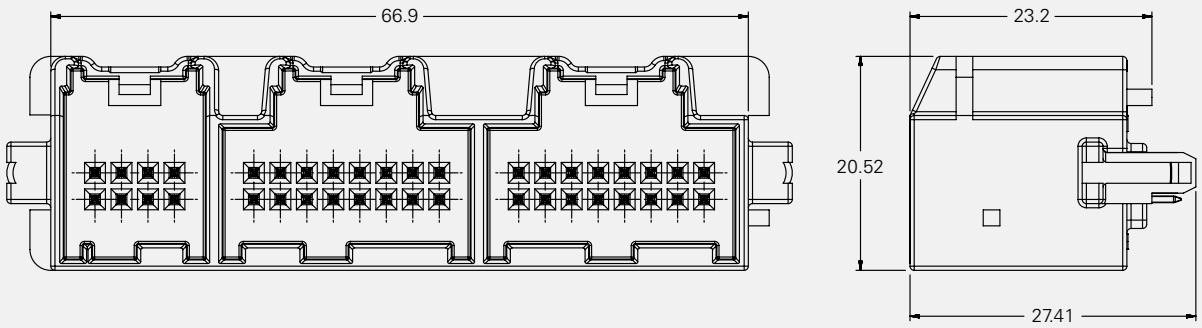

Dimensions shown in millimeters.

Part Number	Material	Color	Module	Index	USCAR Cross-Reference	Mating Connector	
						MicroHVT	Micro64
15423679	PPA GF33 HS	Black	Module 1	8A	064-U-008-2-A02	PE107576	15406141
			Module 2	16A	064-U-016-2-A02	PE107600	15394150
			Module 3	16B	064-U-016-2-B02	PE107601	15394149

This catalog includes products which are not yet production released.
All catalog parts are available from low volume tooling.
Many catalog parts are available from high volume production tooling.
For parts availability, lead times and additional product information, contact Delphi Connection Systems at 248.813.2334.

NOTE: Specifications in this catalog are for general reference only and are subject to change without notice. To verify product information, please contact a Delphi representative.

Peters de Laet
503-661-5088 – phone 503-661-5328 – fax
www.pdel.com

064 Header
Two-Row – Combination Modules

42-way Unsealed - Right Angle

Shown: Index 10A + 16A + 16B

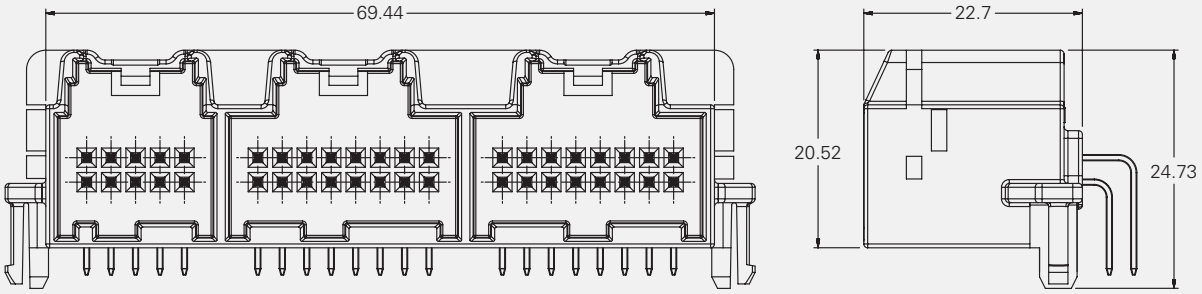

Dimensions shown in millimeters.

Part Number	Material	Color	Module	Index	USCAR Cross-Reference	Mating Connector	
						MicroHVT	Micro64
15422817	PPA GF33 HS	Black	Module 1	10A	064-U-010-2-A02	PE107582	15431080
			Module 2	16A	064-U-016-2-A02	PE107600	15394150
			Module 3	16B	064-U-016-2-B02	PE107601	15394149

This catalog includes products which are not yet production released.
All catalog parts are available from low volume tooling.
Many catalog parts are available from high volume production tooling.
For parts availability, lead times and additional product information, contact Delphi Connection Systems at 248.813.2334.

NOTE: Specifications in this catalog are for general reference only and are subject to change without notice. To verify product information, please contact a Delphi representative.

Peters de Laet
503-661-5088 – phone 503-661-5328 – fax
www.pdel.com

064 Header
Two-Row – Combination Modules

42-way Unsealed - Straight

Shown: Index 10A + 16A + 16B

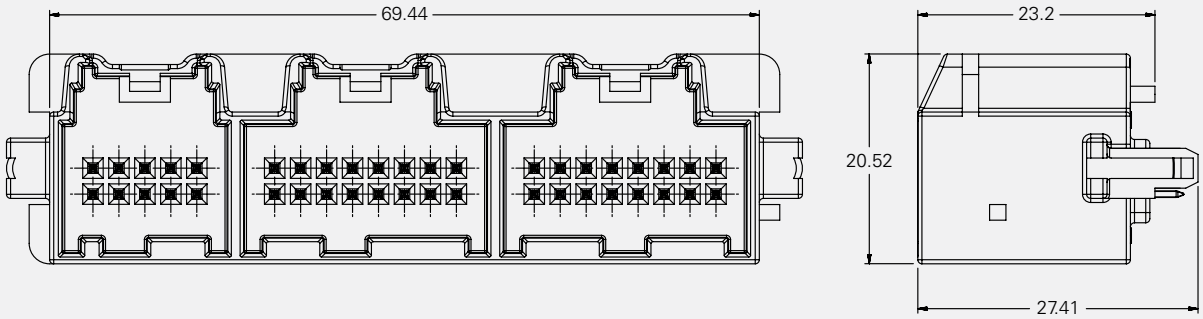

Dimensions shown in millimeters.

Part Number	Material	Color	Module	Index	USCAR Cross-Reference	Mating Connector	
						MicroHVT	Micro64
15423672	PPA GF33 HS	Black	Module 1	10A	064-U-010-2-A02	PE107582	15431080
			Module 2	16A	064-U-016-2-A02	PE107600	15394150
			Module 3	16B	064-U-016-2-B02	PE107601	15394149

This catalog includes products which are not yet production released.
All catalog parts are available from low volume tooling.
Many catalog parts are available from high volume production tooling.
For parts availability, lead times and additional product information, contact Delphi Connection Systems at 248.813.2334.

NOTE: Specifications in this catalog are for general reference only and are subject to change without notice. To verify product information, please contact a Delphi representative.

Peters de Laet
503-661-5088 – phone 503-661-5328 – fax
www.pdel.com

064 Header
Two-Row – Combination Modules

44-way Unsealed - Right Angle

Shown: Index 12A + 16A + 16B

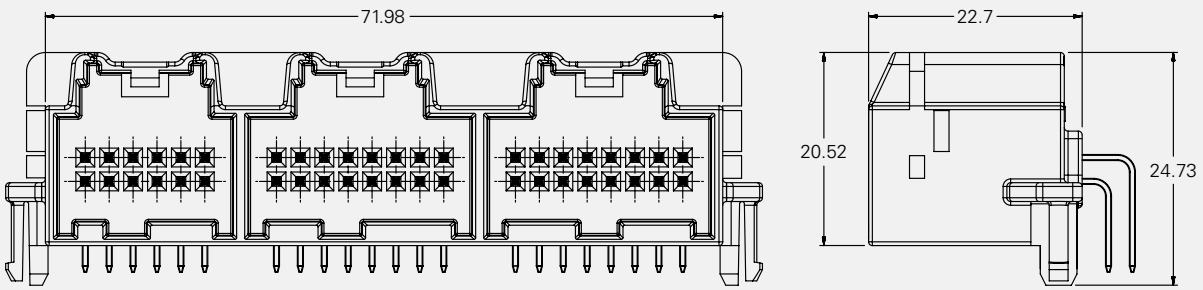

Dimensions shown in millimeters.

Part Number	Material	Color	Module	Index	USCAR Cross-Reference	Mating Connector	
						MicroHVT	Micro64
15422818	PPA GF33 HS	Black	Module 1	12A	064-U-012-2-A02	15483208	—
			Module 2	16A	064-U-016-2-A02	PE107600	15394150
			Module 3	16B	064-U-016-2-B02	PE107601	15394149

This catalog includes products which are not yet production released.
All catalog parts are available from low volume tooling.
Many catalog parts are available from high volume production tooling.
For parts availability, lead times and additional product information, contact Delphi Connection Systems at 248.813.2334.

NOTE: Specifications in this catalog are for general reference only and are subject to change without notice. To verify product information, please contact a Delphi representative.

Peters de Laet
503-661-5088 – phone 503-661-5328 – fax
www.pdel.com

064 Header
Two-Row – Combination Modules

44-way Unsealed - Straight

Shown: Index 12A + 16A + 16B

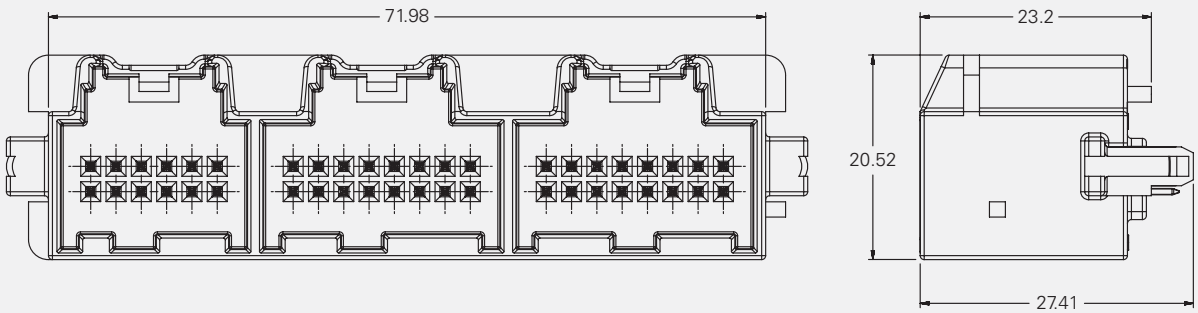

Dimensions shown in millimeters.

Part Number	Material	Color	Module	Index	USCAR Cross-Reference	Mating Connector	
						MicroHVT	Micro64
15423673	PPA GF33 HS	Black	Module 1	12A	064-U-012-2-A02	15483208	—
			Module 2	16A	064-U-016-2-A02	PE107600	15394150
			Module 3	16B	064-U-016-2-B02	PE107601	15394149

This catalog includes products which are not yet production released.
All catalog parts are available from low volume tooling.
Many catalog parts are available from high volume production tooling.
For parts availability, lead times and additional product information, contact Delphi Connection Systems at 248.813.2334.

NOTE: Specifications in this catalog are for general reference only and are subject to change without notice. To verify product information, please contact a Delphi representative.

Peters de Laet
503-661-5088 – phone 503-661-5328 – fax
www.pdel.com

064 Header
Two-Row – Combination Modules

48-way Unsealed - Right Angle

Shown: Index 16A + 16B + 16C

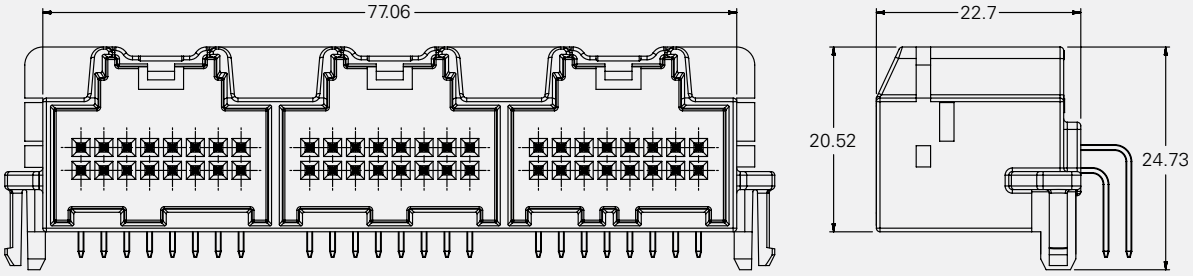

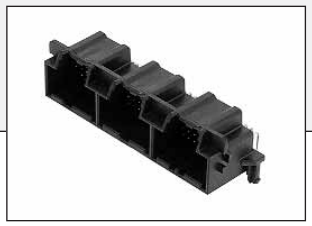

Dimensions shown in millimeters.

Part Number	Material	Color	Module	Index	USCAR Cross-Reference	Mating Connector	
						MicroHVT	Micro64
15422819	PPA GF33 HS	Black	Module 1	16A	064-U-016-2-A02	PE107600	15394150
			Module 2	16B	064-U-016-2-B02	PE107601	15394149
			Module 3	16C	064-U-016-2-C02	PE107602	15394151

This catalog includes products which are not yet production released.
All catalog parts are available from low volume tooling.
Many catalog parts are available from high volume production tooling.
For parts availability, lead times and additional product information, contact Delphi Connection Systems at 248.813.2334.

NOTE: Specifications in this catalog are for general reference only and are subject to change without notice. To verify product information, please contact a Delphi representative.

Peters de Laet
503-661-5088 – phone 503-661-5328 – fax
www.pdel.com

064 Header
Two-Row – Combination Modules

48-way Unsealed - Straight

Shown: Index 16A + 16B + 16C

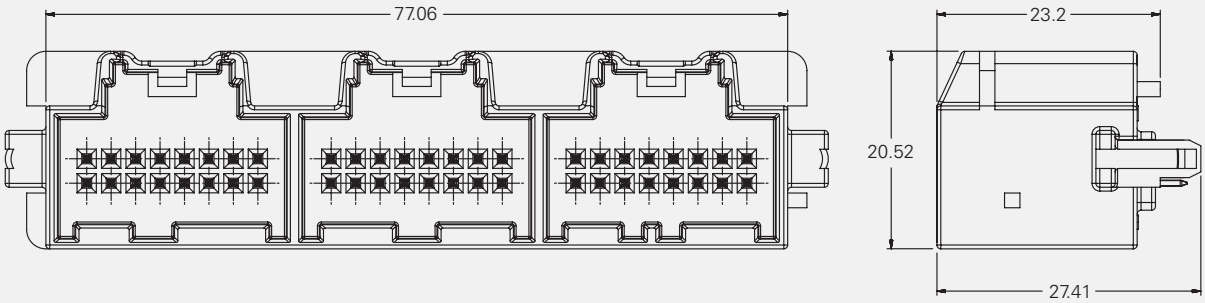

Dimensions shown in millimeters.

Part Number	Material	Color	Module	Index	USCAR Cross-Reference	Mating Connector	
						MicroHVT	Micro64
15423674	PPA GF33 HS	Black	Module 1	16A	064-U-016-2-A02	PE107600	15394150
			Module 2	16B	064-U-016-2-B02	PE107601	15394149
			Module 3	16C	064-U-016-2-C02	PE107602	15394151

This catalog includes products which are not yet production released.
All catalog parts are available from low volume tooling.
Many catalog parts are available from high volume production tooling.
For parts availability, lead times and additional product information, contact Delphi Connection Systems at 248.813.2334.

NOTE: Specifications in this catalog are for general reference only and are subject to change without notice. To verify product information, please contact a Delphi representative.

Peters de Laet
503-661-5088 – phone 503-661-5328 – fax
www.pdel.com

064 Header
Two-Row – Combination Modules

64-way Unsealed - Right Angle

Shown: Index 16A + 16B + 16C + 16D

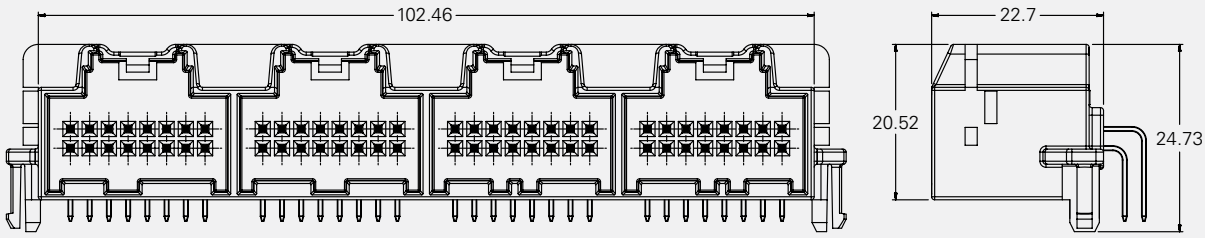

Dimensions shown in millimeters.

Part Number	Material	Color	Module	Index	USCAR Cross-Reference	Mating Connector	
						MicroHVT	Micro64
15459505	PPA GF33 HS	Black	Module 1	16A	064-U-016-2-A02	PE107600	15394150
			Module 2	16B	064-U-016-2-B02	PE107601	15394149
			Module 3	16C	064-U-016-2-C02	PE107602	15394151
			Module 4	16D	064-U-016-2-D02	PE107603	15394152

This catalog includes products which are not yet production released.
All catalog parts are available from low volume tooling.
Many catalog parts are available from high volume production tooling.
For parts availability, lead times and additional product information, contact Delphi Connection Systems at 248.813.2334.

NOTE: Specifications in this catalog are for general reference only and are subject to change without notice. To verify product information, please contact a Delphi representative.

Peters de Laet
503-661-5088 – phone 503-661-5328 – fax
www.pdel.com

064 Header
Two-Row – Combination Modules

64-way Unsealed - Straight

Shown: Index 16A + 16B + 16C + 16D

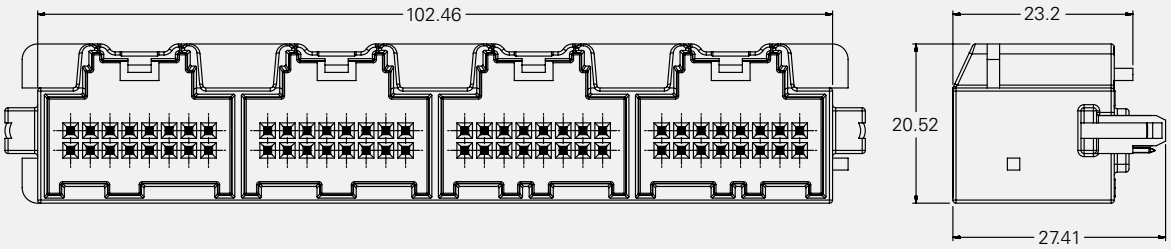

Dimensions shown in millimeters.

Part Number	Material	Color	Module	Index	USCAR Cross-Reference	Mating Connector	
						MicroHVT	Micro64
15459504	PPA GF33 HS	Black	Module 1	16A	064-U-016-2-A02	PE107600	15394150
			Module 2	16B	064-U-016-2-B02	PE107601	15394149
			Module 3	16C	064-U-016-2-C02	PE107602	15394151
			Module 4	16D	064-U-016-2-D02	PE107603	15394152

This catalog includes products which are not yet production released.
All catalog parts are available from low volume tooling.
Many catalog parts are available from high volume production tooling.
For parts availability, lead times and additional product information, contact Delphi Connection Systems at 248.813.2334.

NOTE: Specifications in this catalog are for general reference only and are subject to change without notice. To verify product information, please contact a Delphi representative.

Peters de Laet
503-661-5088 – phone 503-661-5328 – fax
www.pdel.com

Mixed Series – Amplified Header Two-Row – Combination Modules

40-way Unsealed - Right Angle

Shown: Index 16A + 16A + 8A

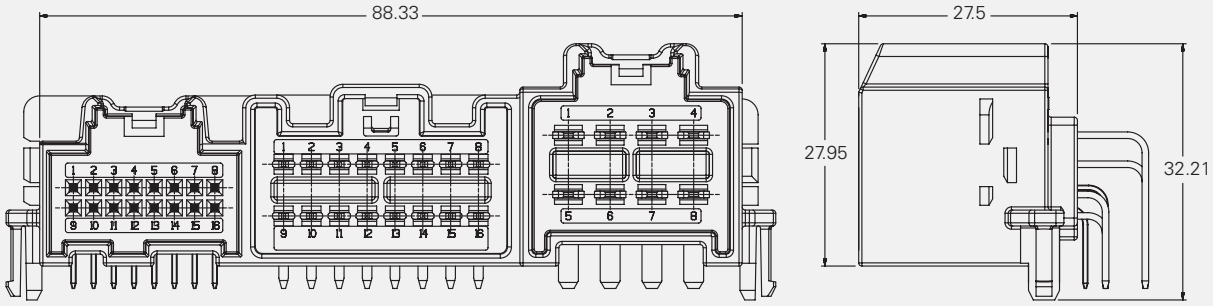

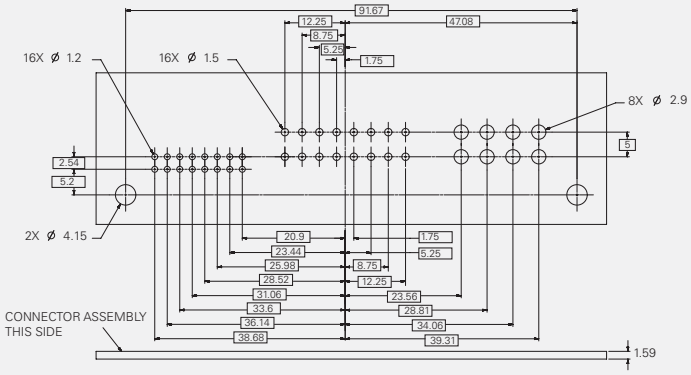

Dimensions shown in millimeters.

Part Number	Material	Color	Module	Index	USCAR Cross-Reference	Mating Connector
PE114929	PBT GF30	Black	Module 1	16A	064-U-016-2-A02	15394150
			Module 2	16A	150-U-016-2-A01	10734461
			Module 3	8A	280-U-008-2-A01	15465056

This catalog includes products which are not yet production released.
All catalog parts are available from low volume tooling.
Many catalog parts are available from high volume production tooling.
For parts availability, lead times and additional product information, contact Delphi Connection Systems at 248.813.2334.

NOTE: Specifications in this catalog are for general reference only and are subject to change without notice. To verify product information, please contact a Delphi representative.

Peters de Laet
503-661-5088 – phone 503-661-5328 – fax
www.pdel.com

Mixed Series – Radio Header Two-Row – Combination Modules

30-way & 46-way Unsealed - Right Angle

Shown: Index 14A + 16A

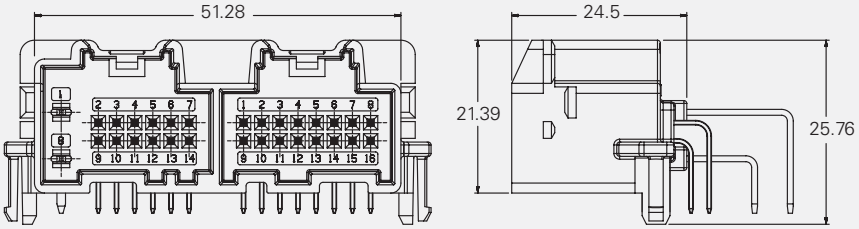

Shown: Index 14A + 16A + 16B

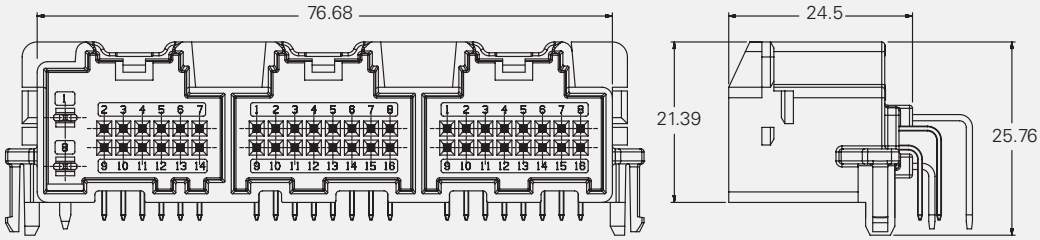

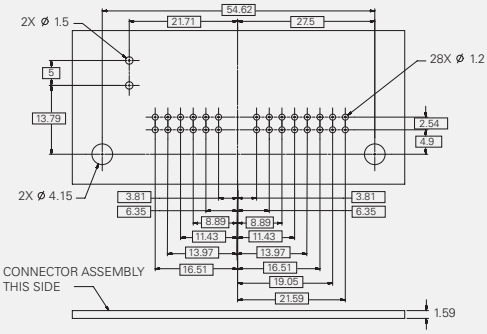

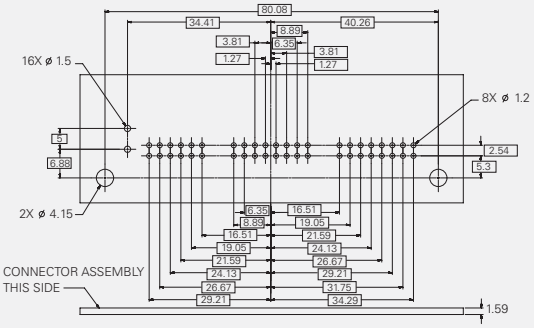

Dimensions shown in millimeters.

	Part Number	Material	Color	Module	Index	USCAR Cross-Reference	Mating Connector
30-way Radio Header	15464948	PBT GF30	Black	Module 1	14A	999-U-014-2-A01	15464950
				Module 2	16A	064-U-016-2-A02	15394150
46-way Radio Header	PE108483	PBT GF30	Black	Module 1	14A	999-U-014-2-A01	15464950
				Module 2	16A	064-U-016-2-A02	15394150
				Module 3	16B	064-U-016-2-B02	15394149

This catalog includes products which are not yet production released.
All catalog parts are available from low volume tooling.
Many catalog parts are available from high volume production tooling.
For parts availability, lead times and additional product information, contact Delphi Connection Systems at 248.813.2334.

NOTE: Specifications in this catalog are for general reference only and are subject to change without notice. To verify product information, please contact a Delphi representative.

Peters de Laet
503-661-5088 – phone 503-661-5328 – fax
www.pdel.com

MicroHVT Female One-Row

4-way Unsealed

Shown: Index 4A

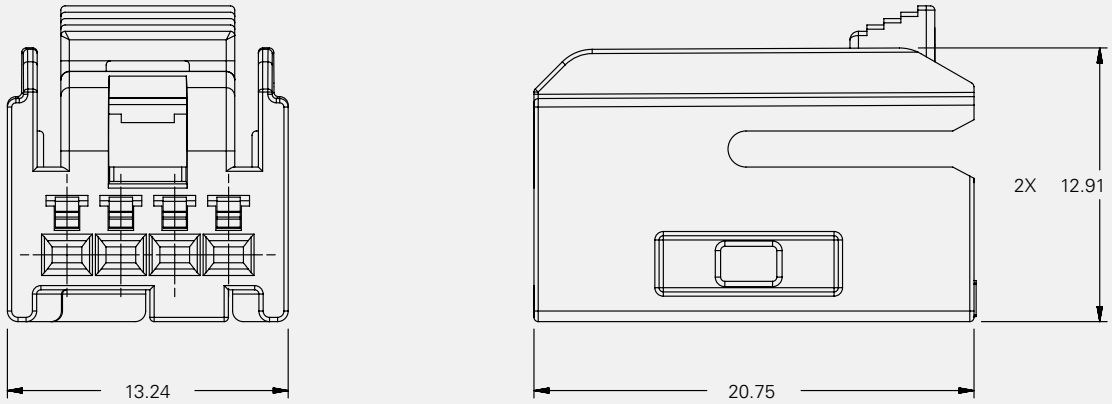

Dimensions shown in millimeters.

Part Number		Color	Index	USCAR Cross-Reference
Connector	Connector w/CPA			
13513467	13513469	Black	4A	064-U-004-1-A02
PE107849	PE107546	Gray	4B	064-U-004-1-B02
PE107850	PE107547	Brown	4C	064-U-004-1-C02
PE107851	PE107548	Green	4D	064-U-004-1-D02
PE107852	PE107549	Dark Blue	4E	064-U-004-1-E02
13531954	13531958	Natural	4F	064-U-004-1-F02
Secondary Lock: MicroHVT 4F - 13513473				

This catalog includes products which are not yet production released.
All catalog parts are available from low volume tooling.
Many catalog parts are available from high volume production tooling.
For parts availability, lead times and additional product information, contact Delphi Connection Systems at 248.813.2334.

NOTE: Specifications in this catalog are for general reference only and are subject to change without notice. To verify product information, please contact a Delphi representative.

Peters de Laet
503-661-5088 – phone 503-661-5328 – fax
www.pdel.com

MicroHVT Female One-Row

5-way Unsealed

Shown: Index 5A

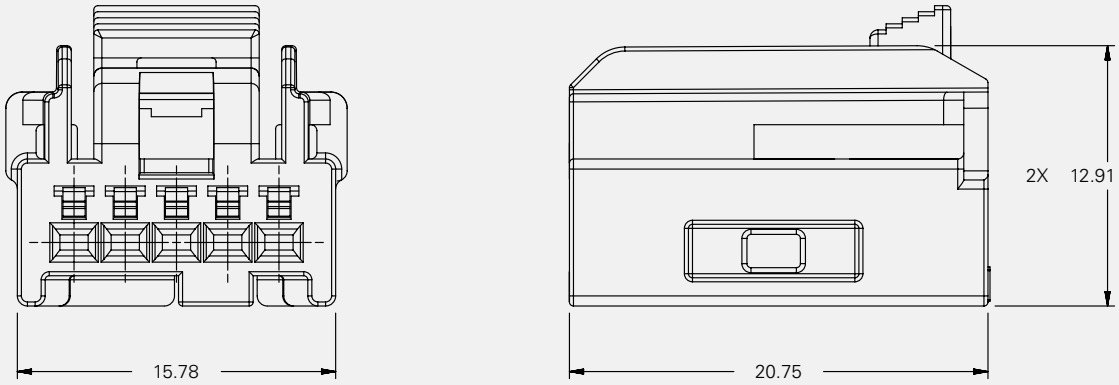

Dimensions shown in millimeters.

Part Number		Color	Index	USCAR Cross-Reference
Connector	Connector w/CPA			
PE102004	PE107551	Black	5A	064-U-005-1-A02
PE102005	PE107552	Gray	5B	064-U-005-1-B02
PE102006	PE107553	Brown	5C	064-U-005-1-C02
PE102007	PE107554	Green	5D	064-U-005-1-D02
PE102008	PE107555	Dark Blue	5E	064-U-005-1-E02
PE102009	PE107556	Natural	5F	064-U-005-1-F02
Secondary Lock: MicroHVT 5F - PE102090				

This catalog includes products which are not yet production released.
All catalog parts are available from low volume tooling.
Many catalog parts are available from high volume production tooling.
For parts availability, lead times and additional product information, contact Delphi Connection Systems at 248.813.2334.

NOTE: Specifications in this catalog are for general reference only and are subject to change without notice. To verify product information, please contact a Delphi representative.

Peters de Laet
503-661-5088 – phone 503-661-5328 – fax
www.pdel.com

MicroHVT Female One-Row

6-way Unsealed

Shown: Index 6A

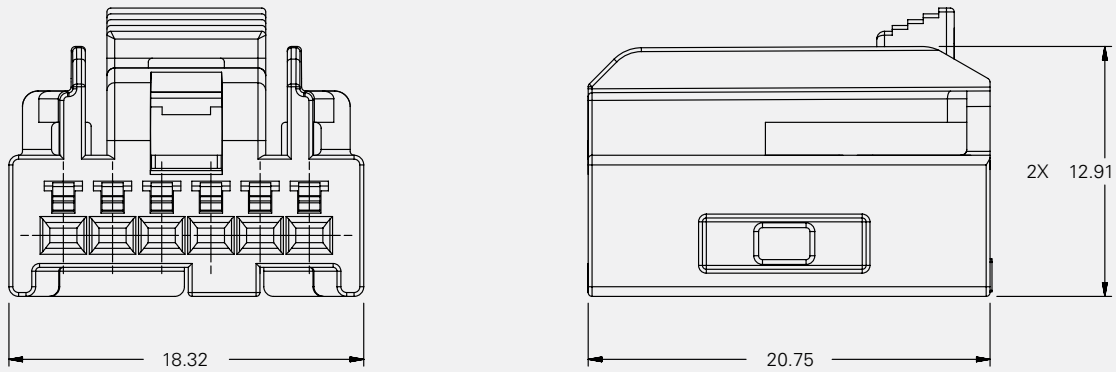

Dimensions shown in millimeters.

Part Number		Color	Index	USCAR Cross-Reference
Connector	Connector w/CPA			
15499926	15499927	Black	6A	064-U-006-1-A02
PE102012	PE107558	Gray	6B	064-U-006-1-B02
PE102013	PE107559	Brown	6C	064-U-006-1-C02
PE102014	PE107560	Green	6D	064-U-006-1-D02
PE102015	PE107561	Dark Blue	6E	064-U-006-1-E02
PE102016	PE107562	Natural	6F	064-U-006-1-F02
Secondary Lock: MicroHVT 6F - 13513474				

This catalog includes products which are not yet production released.
All catalog parts are available from low volume tooling.
Many catalog parts are available from high volume production tooling.
For parts availability, lead times and additional product information, contact Delphi Connection Systems at 248.813.2334.

NOTE: Specifications in this catalog are for general reference only and are subject to change without notice. To verify product information, please contact a Delphi representative.

Peters de Laet
503-661-5088 – phone 503-661-5328 – fax
www.pdel.com

MicroHVT Female One-Row

7-way Unsealed

Shown: Index 7A

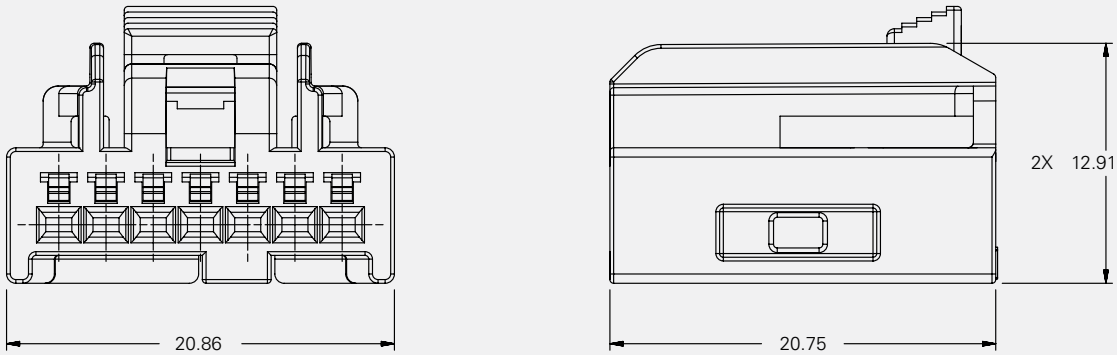

Dimensions shown in millimeters.

Part Number		Color	Index	USCAR Cross-Reference
Connector	Connector w/CPA			
PE102018	PE107563	Black	7A	064-U-007-1-A02
PE102019	PE107564	Gray	7B	064-U-007-1-B02
PE102020	PE107565	Brown	7C	064-U-007-1-C02
PE102021	PE107566	Green	7D	064-U-007-1-D02
PE102022	PE107567	Dark Blue	7E	064-U-007-1-E02
PE102023	PE107568	Natural	7F	064-U-007-1-F02
Secondary Lock: MicroHVT 7F - PE102092				

This catalog includes products which are not yet production released.
All catalog parts are available from low volume tooling.
Many catalog parts are available from high volume production tooling.
For parts availability, lead times and additional product information, contact Delphi Connection Systems at 248.813.2334.

NOTE: Specifications in this catalog are for general reference only and are subject to change without notice. To verify product information, please contact a Delphi representative.

Peters de Laet
503-661-5088 – phone 503-661-5328 – fax
www.pdel.com

MicroHVT Female One-Row

8-way Unsealed

Shown: Index 8A

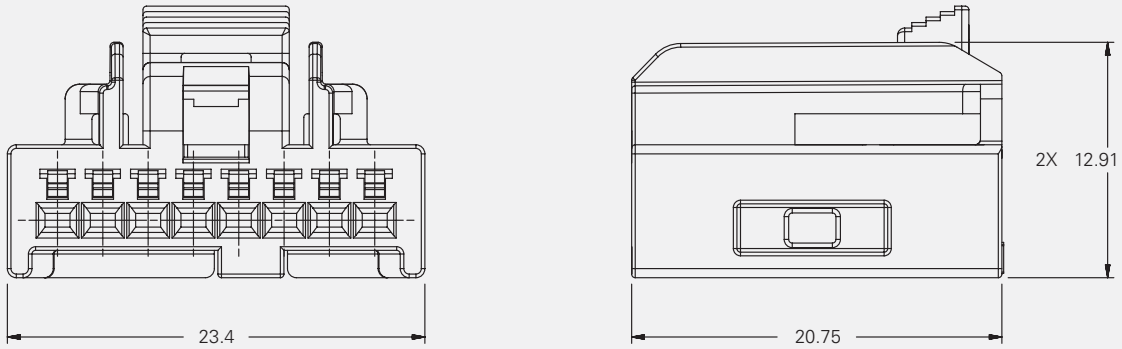

Dimensions shown in millimeters.

Part Number		Color	Index	USCAR Cross-Reference
Connector	Connector w/CPA			
13513468	13513470	Black	8A	064-U-008-1-A02
PE107855	PE107570	Gray	8B	064-U-008-1-B02
PE107856	PE107571	Brown	8C	064-U-008-1-C02
PE107857	PE107572	Green	8D	064-U-008-1-D02
PE107858	PE107573	Dark Blue	8E	064-U-008-1-E02
PE107859	PE107574	Natural	8F	064-U-008-1-F02
Secondary Lock: MicroHVT 8F - 13513475				

This catalog includes products which are not yet production released.
All catalog parts are available from low volume tooling.
Many catalog parts are available from high volume production tooling.
For parts availability, lead times and additional product information, contact Delphi Connection Systems at 248.813.2334.

NOTE: Specifications in this catalog are for general reference only and are subject to change without notice. To verify product information, please contact a Delphi representative.

Peters de Laet
503-661-5088 – phone 503-661-5328 – fax
www.pdel.com

MicroHVT Female Two-Row

8-way Unsealed

Shown: Index 8A

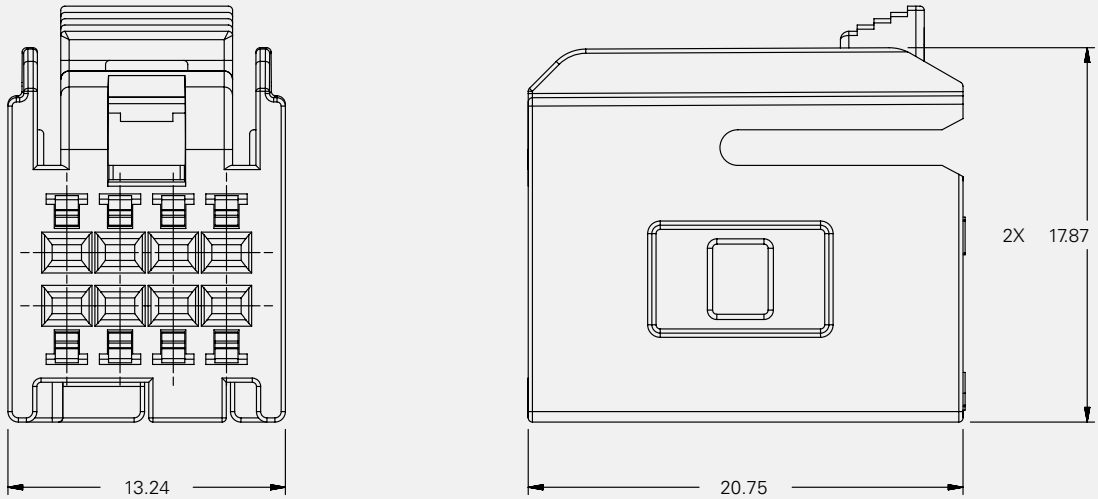

Dimensions shown in millimeters.

Part Number		Color	Index	USCAR Cross-Reference
Connector	Connector w/CPA			
PE107861	PE107576	Black	8A	064-U-008-2-A02
PE107862	PE107577	Gray	8B	064-U-008-2-B02
PE107863	PE107578	Brown	8C	064-U-008-2-C02
PE107864	PE107579	Green	8D	064-U-008-2-D02
PE107866	PE107580	Dark Blue	8E	064-U-008-2-E02
PE107867	PE107581	Natural	8F	064-U-008-2-F02
Secondary Lock: MicroHVT 8F - PE101938				

This catalog includes products which are not yet production released.
All catalog parts are available from low volume tooling.
Many catalog parts are available from high volume production tooling.
For parts availability, lead times and additional product information, contact Delphi Connection Systems at 248.813.2334.

NOTE: Specifications in this catalog are for general reference only and are subject to change without notice. To verify product information, please contact a Delphi representative.

Peters de Laet
503-661-5088 – phone 503-661-5328 – fax
www.pdel.com

MicroHVT Female Two-Row

10-way Unsealed

Shown: Index 10A

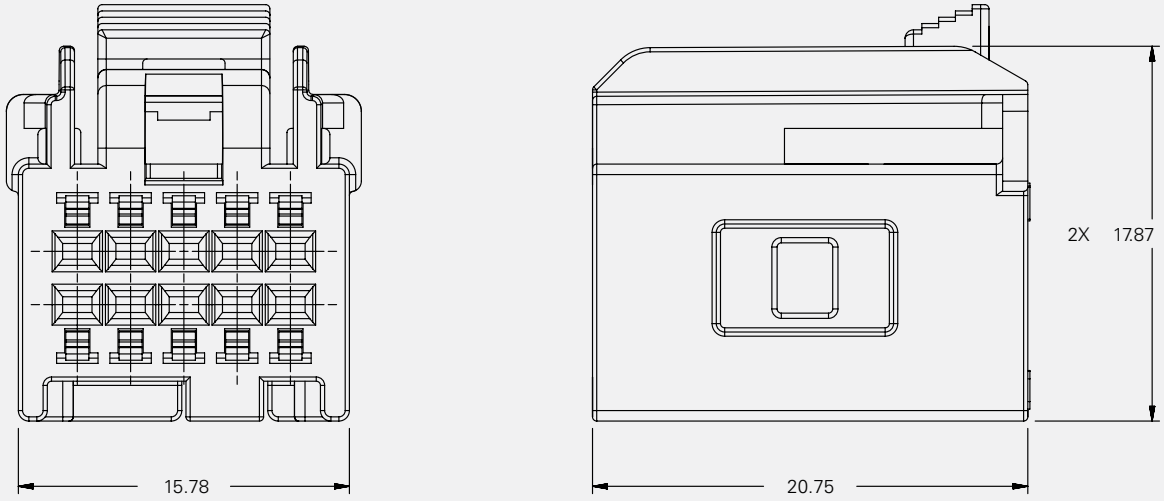

Dimensions shown in millimeters.

Part Number		Color	Index	USCAR Cross-Reference
Connector	Connector w/CPA			
PE102025	PE107582	Black	10A	064-U-010-2-A02
PE102026	PE107583	Gray	10B	064-U-010-2-B02
PE102027	PE107584	Brown	10C	064-U-010-2-C02
PE102028	PE107585	Green	10D	064-U-010-2-D02
PE102029	PE107586	Dark Blue	10E	064-U-010-2-E02
PE102030	PE107587	Natural	10F	064-U-010-2-F02
Secondary Lock: MicroHVT 10F - PE102094				

This catalog includes products which are not yet production released.
All catalog parts are available from low volume tooling.
Many catalog parts are available from high volume production tooling.
For parts availability, lead times and additional product information, contact Delphi Connection Systems at 248.813.2334.

NOTE: Specifications in this catalog are for general reference only and are subject to change without notice. To verify product information, please contact a Delphi representative.

Peters de Laet
503-661-5088 – phone 503-661-5328 – fax
www.pdel.com

MicroHVT Female Two-Row

12-way Unsealed

Shown: Index 12A

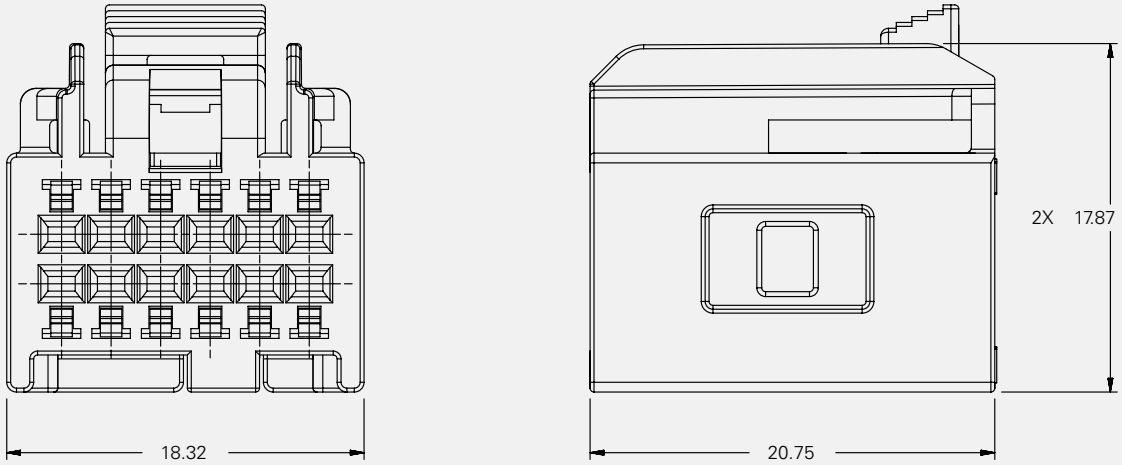

Dimensions shown in millimeters.

Part Number		Color	Index	USCAR Cross-Reference
Connector	Connector w/CPA			
15477027	15483208	Black	12A	064-U-012-2-A02
PE102033	PE107589	Gray	12B	064-U-012-2-B02
PE102034	PE107590	Brown	12C	064-U-012-2-C02
PE102035	PE107591	Green	12D	064-U-012-2-D02
PE102036	PE107592	Dark Blue	12E	064-U-012-2-E02
PE102037	PE107593	Natural	12F	064-U-012-2-F02
Secondary Lock: MicroHVT 12F - 15477037				

This catalog includes products which are not yet production released.
All catalog parts are available from low volume tooling.
Many catalog parts are available from high volume production tooling.
For parts availability, lead times and additional product information, contact Delphi Connection Systems at 248.813.2334.

NOTE: Specifications in this catalog are for general reference only and are subject to change without notice. To verify product information, please contact a Delphi representative.

Peters de Laet
503-661-5088 – phone 503-661-5328 – fax
www.pdel.com

MicroHVT Female Two-Row

16-way Unsealed

Shown: Index 16A

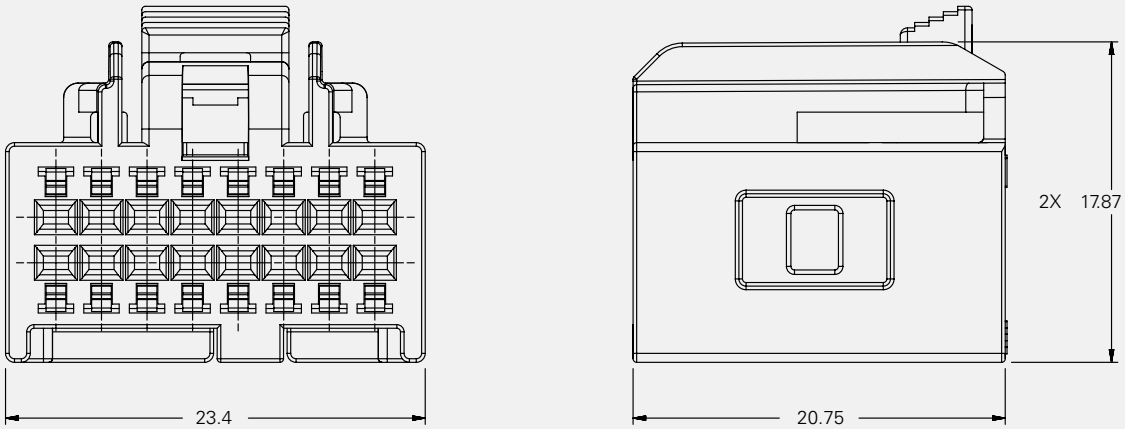

Dimensions shown in millimeters.

Part Number		Color	Index	USCAR Cross-Reference
Connector	Connector w/CPA			
PE107868	PE107600	Black	16A	064-U-016-2-A02
PE107869	PE107601	Gray	16B	064-U-016-2-B02
PE107870	PE107602	Brown	16C	064-U-016-2-C02
PE107871	PE107603	Green	16D	064-U-016-2-D02
PE107872	PE107604	Dark Blue	16E	064-U-016-2-E02
PE107873	PE107605	Natural	16F	064-U-016-2-F02
Secondary Lock: MicroHVT 16F - PE101003				

This catalog includes products which are not yet production released.
All catalog parts are available from low volume tooling.
Many catalog parts are available from high volume production tooling.
For parts availability, lead times and additional product information, contact Delphi Connection Systems at 248.813.2334.

NOTE: Specifications in this catalog are for general reference only and are subject to change without notice. To verify product information, please contact a Delphi representative.

Peters de Laet
503-661-5088 – phone 503-661-5328 – fax
www.pdel.com

MicroHVT Female Terminals

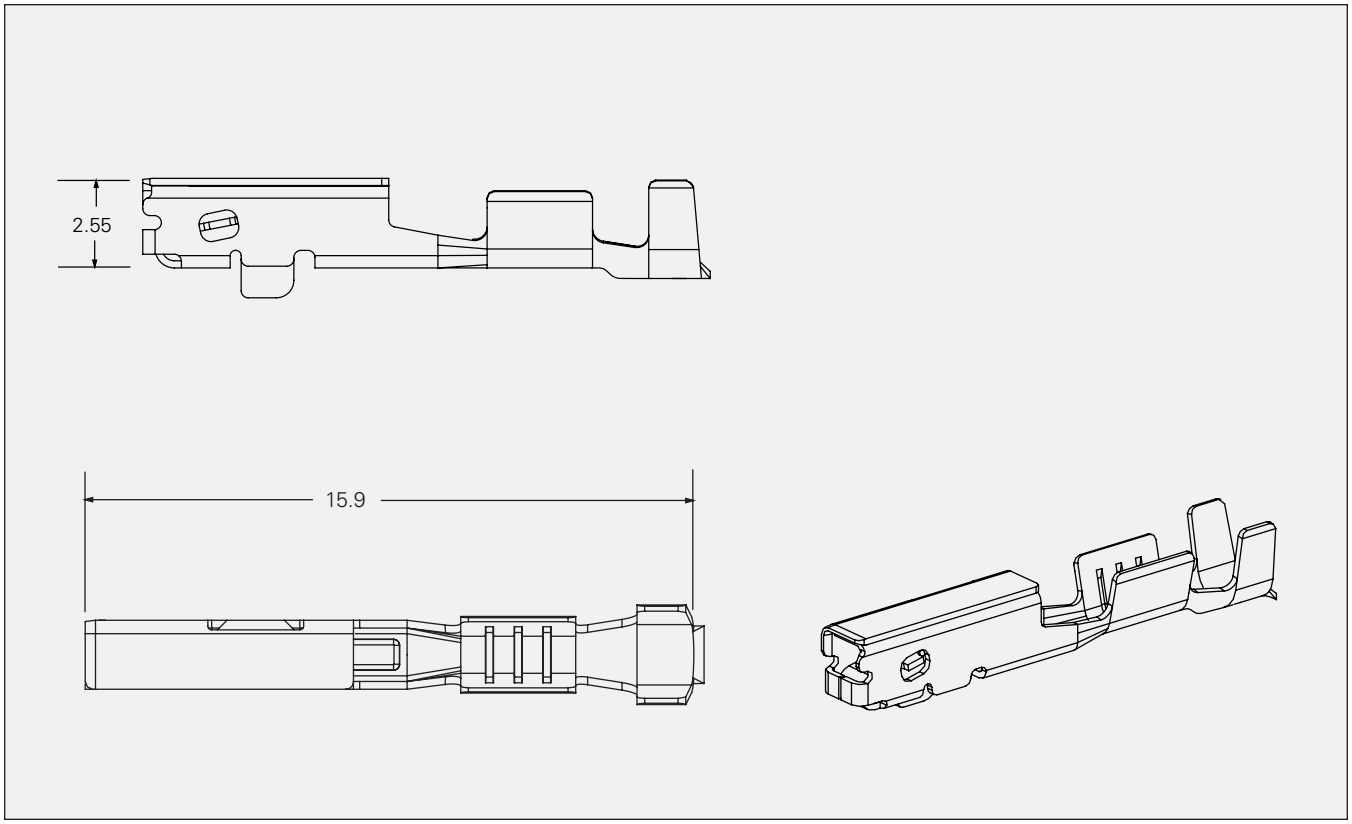

Dimensions shown in millimeters.

Part Number	Typical Cable Applications	Cable OD	Base Material	Plating
15445904	0.35 mm^2 - 0.50 mm^2 TWP (SAE J-1128)	1.47 - 1.83	CDA 425 Tin Brass Extra Hard	Tin
15445905	0.75 mm^2 FLRY-A (DIN 72551) 0.80 mm^2 TXL Reduced Wall (SAE J-1128)	1.70 - 1.90	CDA 425 Tin Brass Extra Hard	Tin

This catalog includes products which are not yet production released.
All catalog parts are available from low volume tooling.
Many catalog parts are available from high volume production tooling.
For parts availability, lead times and additional product information, contact Delphi Connection Systems at 248.813.2334.

NOTE: Specifications in this catalog are for general reference only and are subject to change without notice. To verify product information, please contact a Delphi representative.

Peters de Laet
503-661-5088 – phone 503-661-5328 – fax
www.pdel.com

Micro64 Female Two-Row

8-way Unsealed

Shown: Index 8A

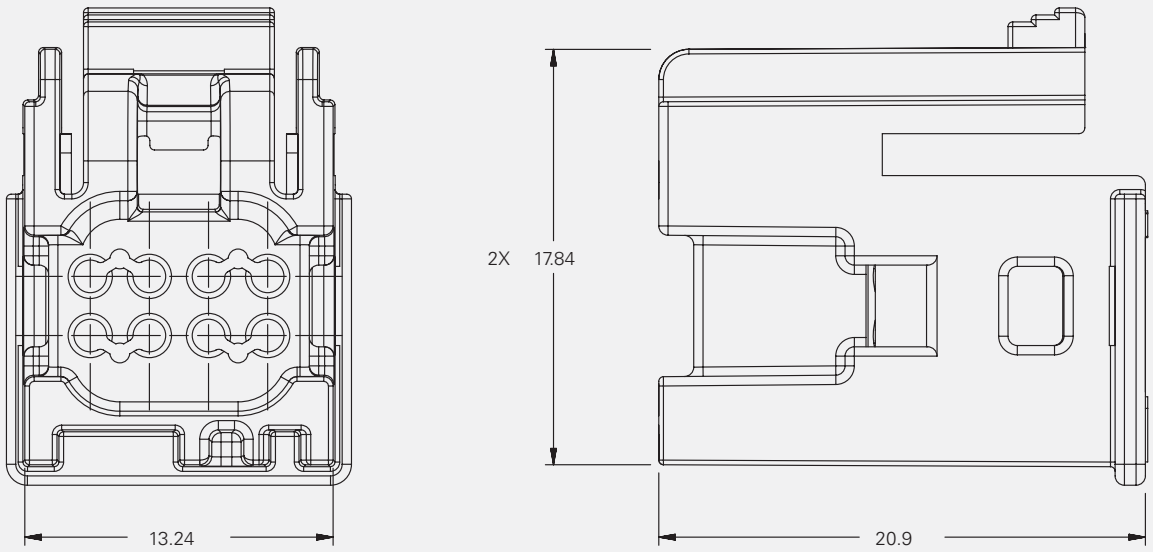

Dimensions shown in millimeters.

Part Number		Color	Index	USCAR Cross-Reference
Connector	Connector w/CPA			
15480081	15406141	Black	8A	064-U-008-2-A02
15480082	15406142	Gray	8B	064-U-008-2-B02
Secondary Lock: Micro64 8F - 15404970				

This catalog includes products which are not yet production released.
All catalog parts are available from low volume tooling.
Many catalog parts are available from high volume production tooling.
For parts availability, lead times and additional product information, contact Delphi Connection Systems at 248.813.2334.

NOTE: Specifications in this catalog are for general reference only and are subject to change without notice. To verify product information, please contact a Delphi representative.

Peters de Laet
503-661-5088 – phone 503-661-5328 – fax
www.pdel.com

Micro64 Female Two-Row

10-way Unsealed

Shown: Index 10A

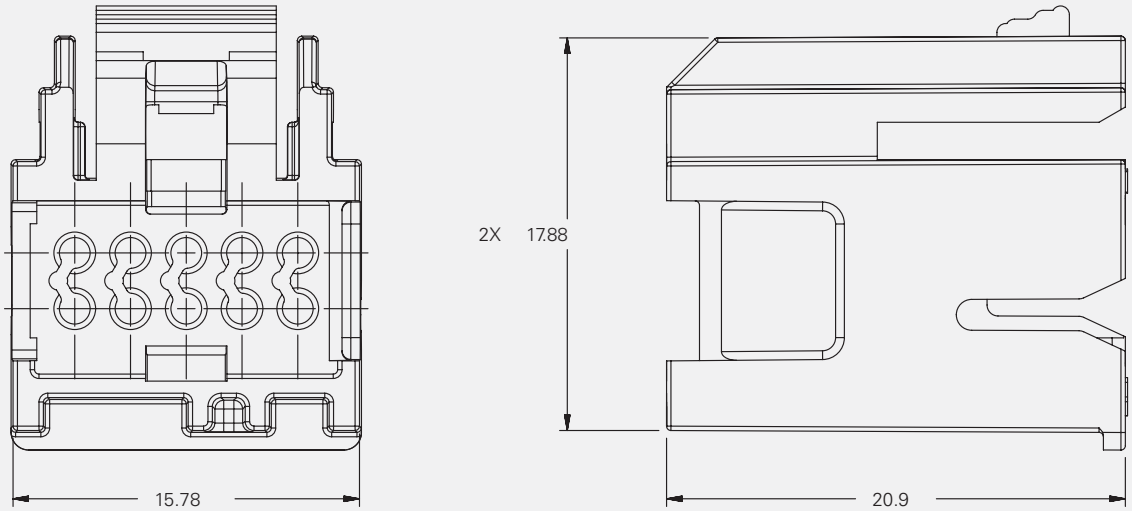

Dimensions shown in millimeters.

Part Number		Color	Index	USCAR Cross-Reference
Connector	Connector w/CPA			
15479266	15431080	Black	10A	064-U-010-2-A02
15479267	15431081	Gray	10B	064-U-010-2-B02
Secondary Lock: Micro64 10F - 15433830				

This catalog includes products which are not yet production released.
All catalog parts are available from low volume tooling.
Many catalog parts are available from high volume production tooling.
For parts availability, lead times and additional product information, contact Delphi Connection Systems at 248.813.2334.

NOTE: Specifications in this catalog are for general reference only and are subject to change without notice. To verify product information, please contact a Delphi representative.

Peters de Laet
503-661-5088 – phone 503-661-5328 – fax
www.pdel.com

Micro64 Female Two-Row

16-way Unsealed

Shown: Index 16A

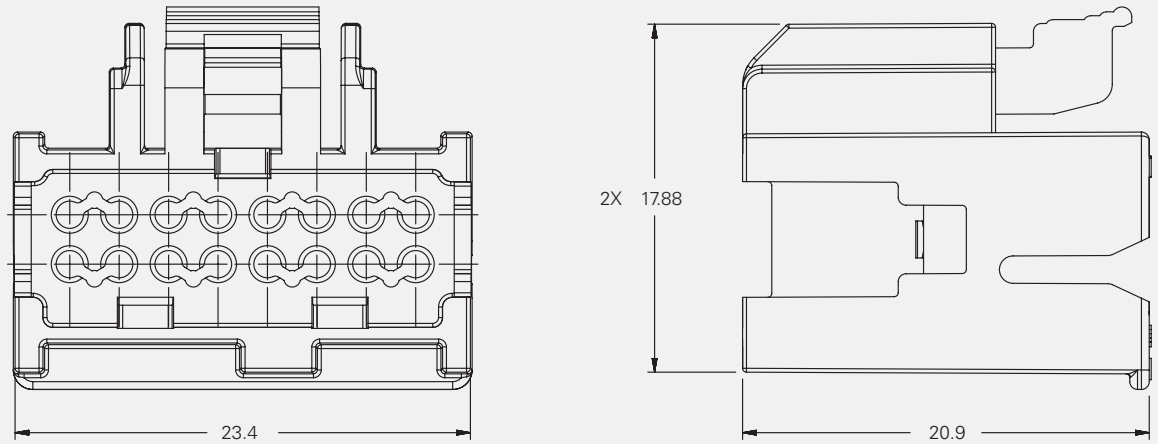

Dimensions shown in millimeters.

Part Number		Color	Index	USCAR Cross-Reference
Connector	Connector w/CPA			
15416970	15394150	Black	16A	064-U-016-2-A02
15429805	15394149	Gray	16B	064-U-016-2-B02
15429806	15394151	Brown	16C	064-U-016-2-C02
15429807	15394152	Green	16D	064-U-016-2-D02
15429808	15394153	Dark Blue	16E	064-U-016-2-E02
15429809	15394154	Natural	16F	064-U-016-2-F02
Secondary Lock: Micro64 16F - 15359196				

This catalog includes products which are not yet production released.
All catalog parts are available from low volume tooling.
Many catalog parts are available from high volume production tooling.
For parts availability, lead times and additional product information, contact Delphi Connection Systems at 248.813.2334.

NOTE: Specifications in this catalog are for general reference only and are subject to change without notice. To verify product information, please contact a Delphi representative.

Peters de Laet
503-661-5088 – phone 503-661-5328 – fax
www.pdel.com

Micro64 Female Terminals

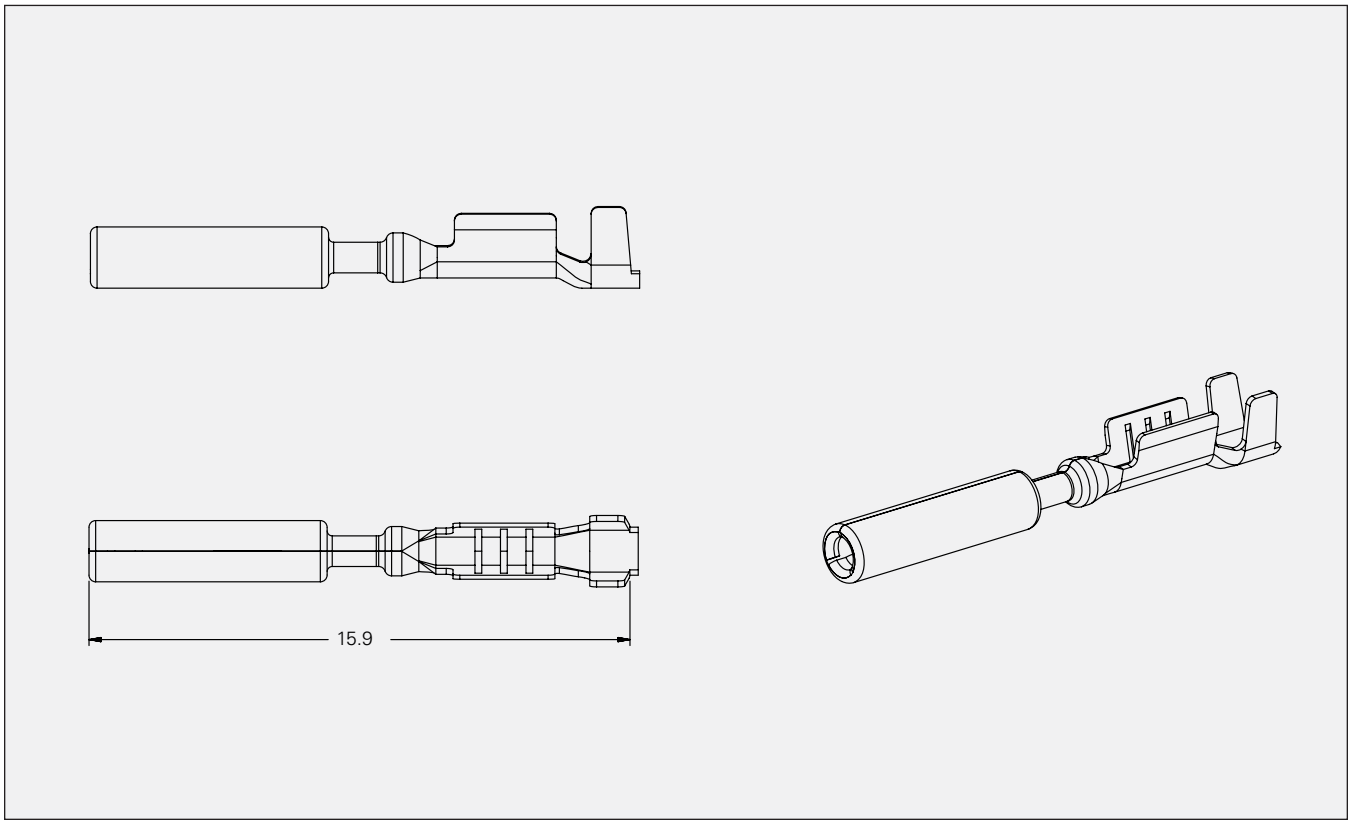

Dimensions shown in millimeters.

Part Number	Typical Cable Applications	Cable OD	Base Material	Plating
15394147	0.35 mm^2 TWP (SAE J-1128)	1.47 - 1.63	CDA 19025 copper alloy half hard	Tin
15401440	0.50 mm^2 TWP (SAE J-1128) 0.75 mm^2 FLRY-A (DIN 72551) 0.80 mm^2 TXL Reduced Wall (SAE J-1128)	1.64 - 1.90	CDA 19025 copper alloy half hard	Tin

This catalog includes products which are not yet production released.
All catalog parts are available from low volume tooling.
Many catalog parts are available from high volume production tooling.
For parts availability, lead times and additional product information, contact Delphi Connection Systems at 248.813.2334.

NOTE: Specifications in this catalog are for general reference only and are subject to change without notice. To verify product information, please contact a Delphi representative.

Peters de Laet
503-661-5088 – phone 503-661-5328 – fax
www.pdel.com

Peters de Laet
503-661-5088 – phone 503-661-5328 – fax
www.pdel.com

0.8, 1.5, 2.8, 4.8, 6.3 and Mixed

Available in both in-line and device connections for all underhood vehicle applications. By utilizing multiple contact points, the system offers exceptional electrical stability, even in high vibration applications.

Available in both device and in-line connection systems for all vehicle applications. Exceptional performance in both high and low current applications.

Ducon Features

- High current performance
- Multiple contact points
- Small overall dimensions
- Low energy, low voltage capability
- Excellent resistance to temperature, chemicals, abrasion and vibration
- Terminal Position Assurance (TPA)
- Rugged two piece terminal construction

Peters de Laet
503-661-5088 – phone 503-661-5328 – fax
www.pdel.com

0.8

Cross Sectional View

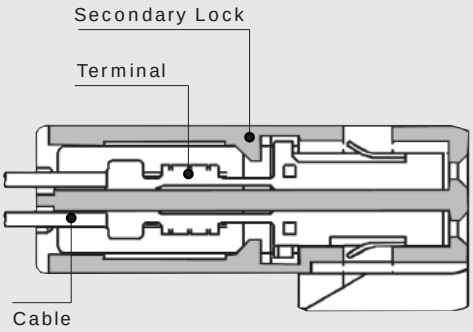

Female Connector

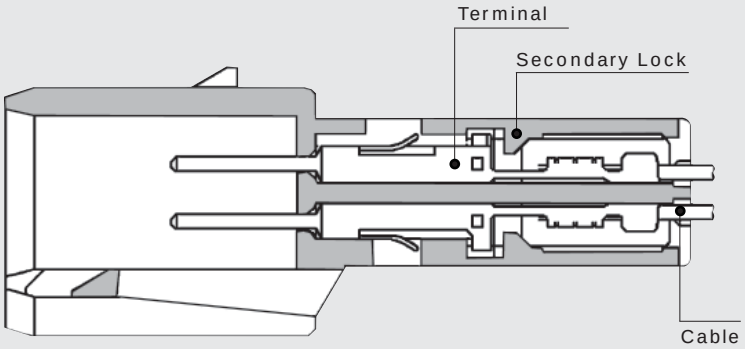

Male Connector

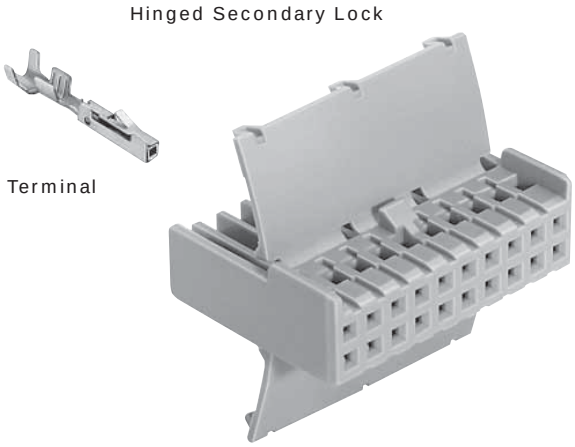

Female Connector

0.8 Female Terminal Unsealed			
Part #	**Cable Range (mm²)**	**Material**	**Plating**
12131423	1.0-0.5	Copper Nickel Silicon Alloy	Tin

0.8 Female Connector Unsealed			
# Cavities	**Connector**	**Color**	**Material**
20	15344037	Gray	PA6

NOTE: Specifications in this catalog are for general reference only and are subject to change without notice. To verify product information, please contact a Delphi representative.

Peters de Laet
503-661-5088 – phone 503-661-5328 – fax
www.pdel.com

0.8

Unsealed System Application Information

0.8 Series Terminals – Tin Plated

CABLE RANGE (mm²): 0.5-1.0
CURRENT RANGE (AMPS): 0-15
TEMP RANGE °C: ..... -40 to 135
RESISTANCE: ..... <10mΩ@20mV
VOLTAGE DROP: ..... <4.0mV/amp
CENTERLINE SPACING (mm): 3.0
BLADE WIDTH (mm): 0.8

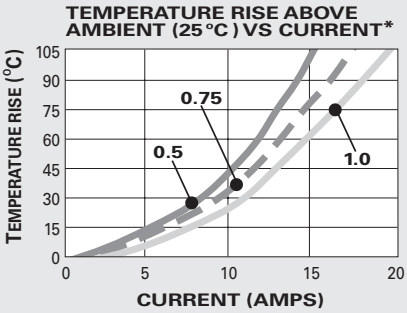

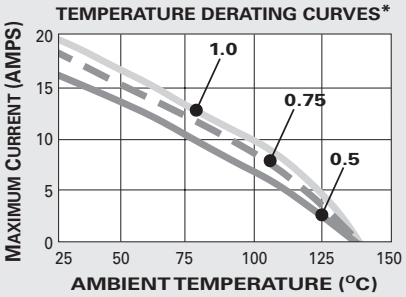

*The test data are based on single circuits in free space and were generated using a "Lumped Resistance" model. This model does not account for all of the variables that would be present in an actual application. For actual product performance, contact your regional representative.

Hinged Secondary Lock

Male Connector

Male Terminal

0.8 Male Connector Unsealed			
# Cavities	**Connector**	**Color**	**Material**
20	15344038	Black	PA6

0.8 Male Terminal Unsealed			
Part #	**Cable Range (mm²)**	**Material**	**Plating**
15327159	1.0-0.50	Copper Nickel Silicon Alloy	Tin

SECTION NOTES:

- Ducon Connection Systems have been validated using DIN Cable Standards.

NOTE: Specifications in this catalog are for general reference only and are subject to change without notice. To verify product information, please contact a Delphi representative.

Peters de Laet
503-661-5088 – phone 503-661-5328 – fax
www.pdel.com

0.8

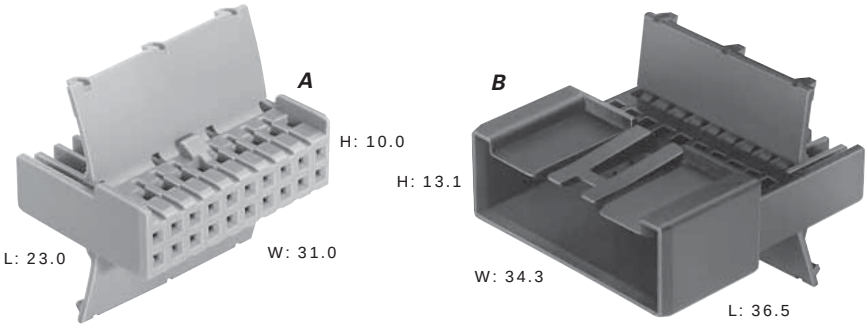

Total Mated Length: 44.5mm

A. Part No: 15344037

Description:	Connector 20F
Size:	23.0L x 10.0H x 31.0W
Color:	Gray
Material:	PA6
Terminals:	See Page 5.2

B. Part No: 15344038

Description:	Connector 20M
Size:	36.5L x 13.1H x 34.3W
Color:	Black
Material:	PA6
Terminals:	See Page 5.3

NOTE: Specifications in this catalog are for general reference only and are subject to change without notice. To verify product information, please contact a Delphi representative.

Peters de Laet
503-661-5088 – phone 503-661-5328 – fax
www.pdel.com

0.8 Device Connections

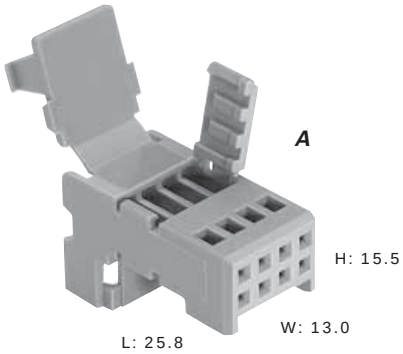

A. Part No: 15327190

Description:	Connector 8F
Size:	25.8L x 15.5H x 13.0W
Color:	Gray
Material:	PA66
Terminals:	See Page 5.2

NOTE: Specifications in this catalog are for general reference only and are subject to change without notice. To verify product information, please contact a Delphi representative.

Peters de Laet
503-661-5088 – phone 503-661-5328 – fax
www.pdel.com

1.5

Cross Sectional View

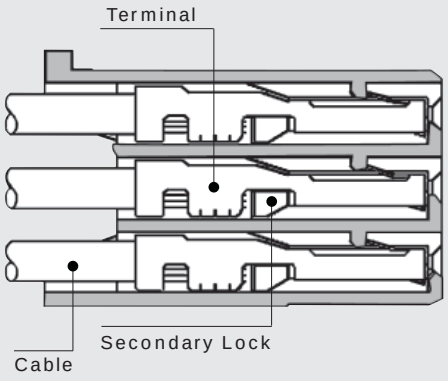

Female Connector

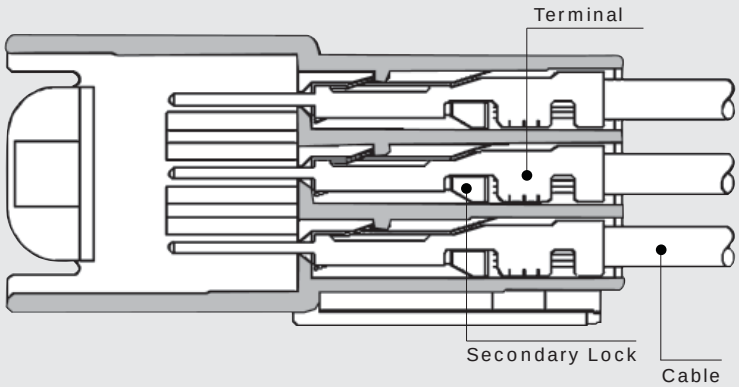

Male Connector

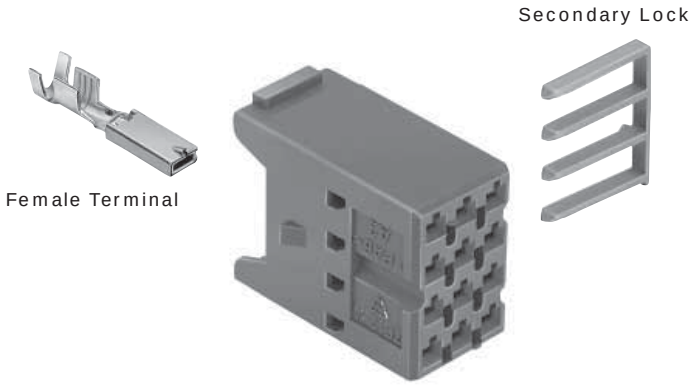

Female Connector

1.5 Female Terminals Unsealed			
Part #	**Cable Range (mm²)**	**Material**	**Plating**
12147302	1.0-0.5	Copper Nickel Silicon Alloy	Tin
12147303	2.5-1.5	Copper Nickel Silicon Alloy	Tin

1.5 Female Connectors Unsealed				
# Cavities	**Connector**	**Color**	**Material**	**Secondary Lock**
9	15336766	Blue	PA6	15354674
12	12185284	Green	PA6	12198533
15	12185081	Black	PA6	12185080

NOTE: Specifications in this catalog are for general reference only and are subject to change without notice. To verify product information, please contact a Delphi representative.

Peters de Laet
503-661-5088 – phone 503-661-5328 – fax
www.pdel.com

1.5

Unsealed System Application Information

CABLE RANGE (mm²): 0.5-2.5

CURRENT RANGE (AMPS): 25

TEMP RANGE °C: ..... -40 to 135

RESISTANCE: ..... <10mΩ@20mV

VOLTAGE DROP: ..... <4.0mV/amp

CENTERLINE SPACING (mm): 4.5

BLADE WIDTH (mm): 1.5

1.5 Series Terminals – Tin Plated

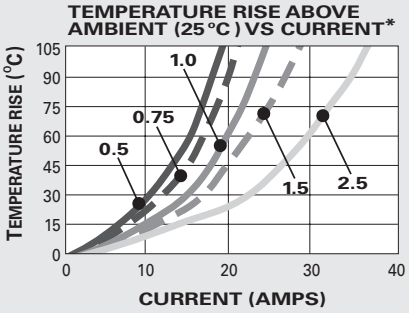

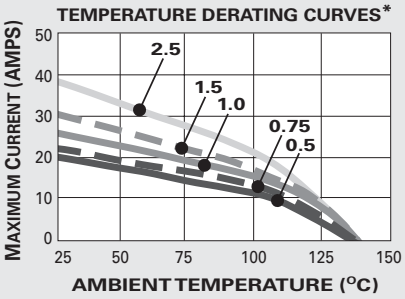

*The test data are based on single circuits in free space and were generated using a "Lumped Resistance" model. This model does not account for all of the variables that would be present in an actual application. For actual product performance, contact your regional support representative.

Male Connector

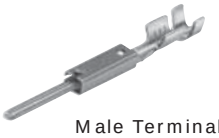

Male Terminal

1.5 Male Connectors Unsealed

# Cavities	Connector	Color	Material	Secondary Lock
9	12185085	Blue	PA6	15354674
12	12184963	Green	PA6	12198533
15	12184934	Black	PA6	12184935

1.5 Male Terminals Unsealed

Part #	Cable Range (mm²)	Material	Plating
12147299	1.0-0.5	Copper Nickel Silicon Alloy	Tin
12147300	2.5-1.5	Copper Nickel Silicon Alloy	Tin

SECTION NOTES:

- Ducon Connection Systems have been validated using DIN Cable Standards.

NOTE: Specifications in this catalog are for general reference only and are subject to change without notice. To verify product information, please contact a Delphi representative.

Peters de Laet
503-661-5088 – phone 503-661-5328 – fax
www.pdel.com

1.5

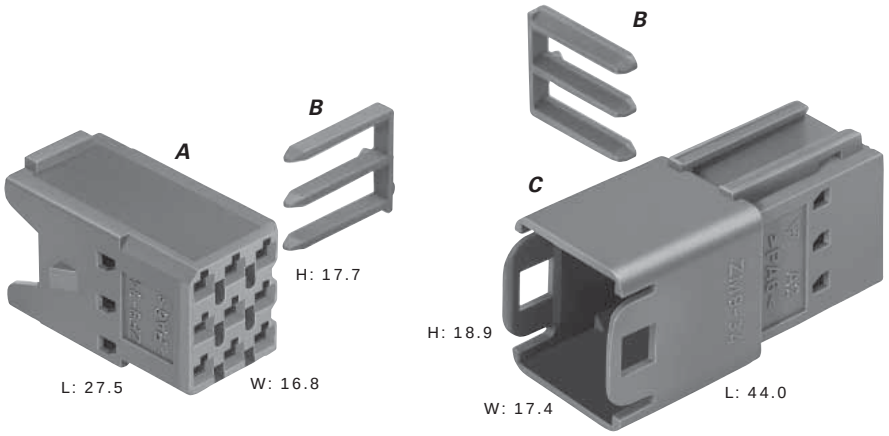

Total Mated Length: 50.5mm

A. Part No: 15336766

Description:	Connector 9F
Size:	27.5L x 17.7H x 16.8W
Color:	Blue
Material:	PA6
Terminals:	See Page 5.6

B. Part No: 15354674

Description:	Secondary Lock
Number Req:	2
Color:	Gray
Material:	PA6 15% GF

C. Part No: 12185085

Description:	Connector 9M (Clip Slot)
Size:	44.0L x 18.9H x 17.4W
Color:	Blue
Material:	PA6
Terminals:	See Page 5.7

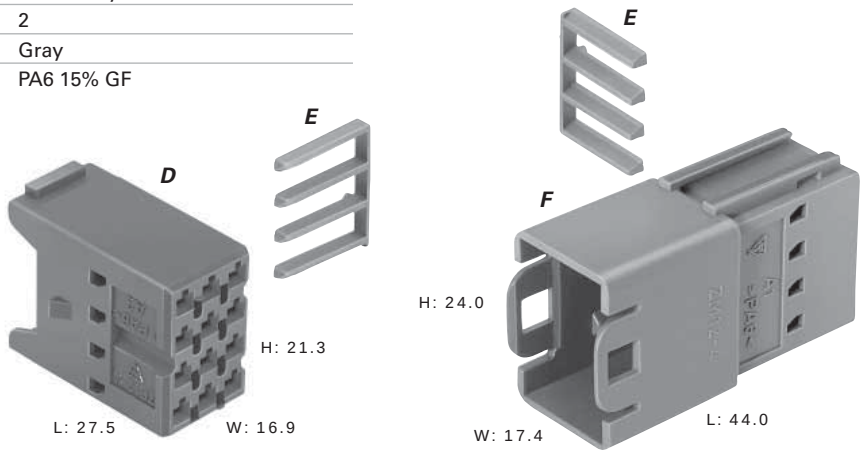

Total Mated Length: 50.5mm

D. Part No: 12185284

Description:	Connector 12F
Size:	27.5L x 21.3H x 16.9W
Color:	Green
Material:	PA6
Terminals:	See Page 5.6

E. Part No: 12198533

Description:	Secondary Lock
Number Req:	2
Color:	Gray
Material:	PA6 15% GF

F. Part No: 12184963

Description:	Connector 12M (Clip Slot)
Size:	44.0L x 24.0H x 17.4W
Color:	Green
Material:	PA6
Terminals:	See Page 5.7

NOTE: Specifications in this catalog are for general reference only and are subject to change without notice. To verify product information, please contact a Delphi representative.

Peters de Laet
503-661-5088 – phone 503-661-5328 – fax
www.pdel.com

1.5

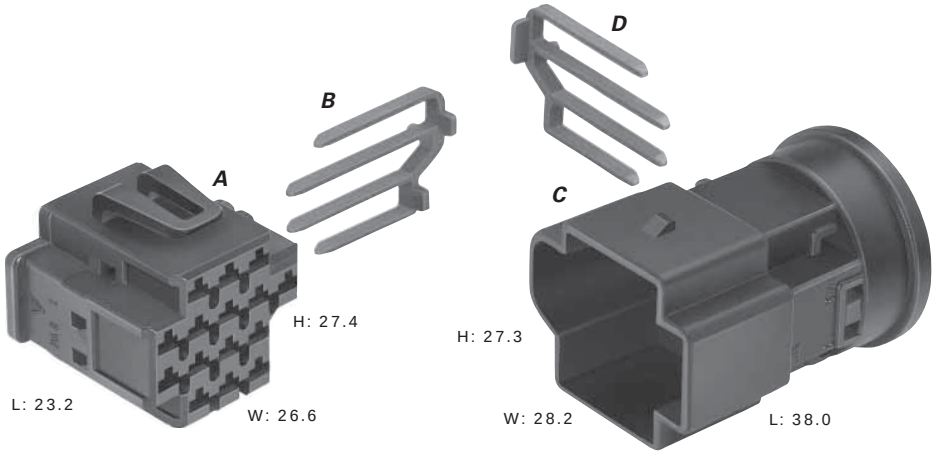

Total Mated Length: 47.0mm

A. Part No: 12185081

Description:	Connector 15F
Size:	23.2L x 27.4H x 26.6W
Color:	Black
Material:	PA6
Terminals:	See Page 5.6

B. Part No: 12185080

Description:	Secondary Lock
Color:	Gray
Material:	PA6 15% GF

C. Part No: 12184934

Description:	Connector 15M
Size:	38.0L x 27.3H x 28.2W
Color:	Black
Material:	PA6
Terminals:	See Page 5.7

D. Part No: 12184935

Description:	Secondary Lock
Color:	Gray
Material:	PA6 15% GF

NOTE: Specifications in this catalog are for general reference only and are subject to change without notice. To verify product information, please contact a Delphi representative.

Peters de Laet
503-661-5088 – phone 503-661-5328 – fax
www.pdel.com

2.8

Cross Sectional View

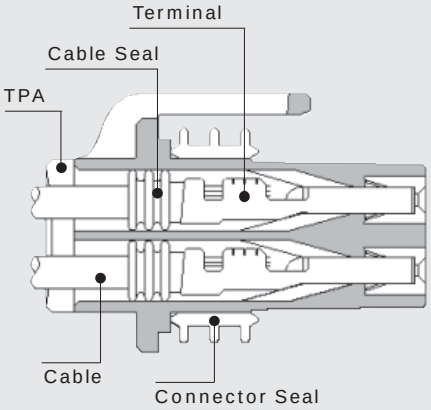

Female Connector Assembly

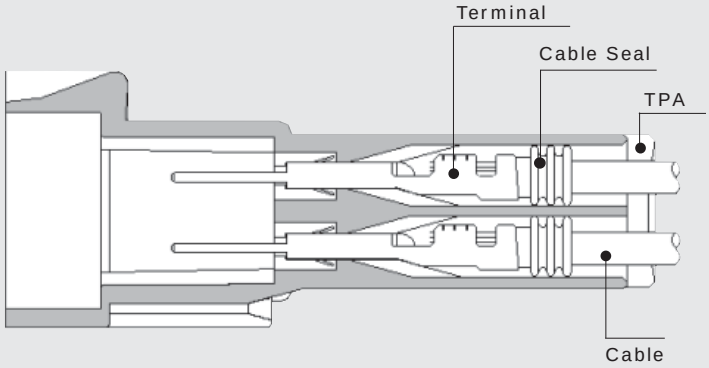

Male Connector

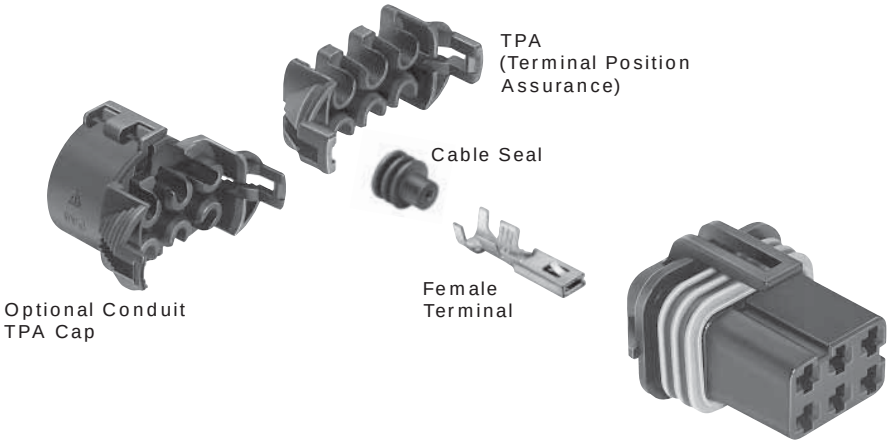

Female Connector Assembly

2.8 Female Terminals Sealed

Part #	Cable Range (mm²)	Material	Plating
12158098	1.5-0.5	Copper Nickel Silicon Alloy	Tin
12185008	2.5-1.5	Copper Nickel Silicon Alloy	Tin

2.8 Female Connector Assembly Sealed

# Cavities	Connector	Color	Material	TPA
6	15344052	Black	PA6	12185000
Optional Conduit	TPA Cap	Black	PA6	10717815

2.8 Ducon Cable Seals

Reel Part #	Loose Part #	Cable Dia.	Material	Color
12089442	15324974	2.00-1.20	Silicone	Blue
10720769	15324976	2.40-1.60	Silicone	White
15363992	15324973	2.90-2.00	Silicone	Dk. Red

NOTE: Specifications in this catalog are for general reference only and are subject to change without notice. To verify product information, please contact a Delphi representative.

Peters de Laet
503-661-5088 – phone 503-661-5328 – fax
www.pdel.com

2.8

Sealed System Application Information

2.8 Series Terminals – Tin Plated

CABLE RANGE (mm²): 0.5-2.5

CURRENT RANGE (AMPS): 33

TEMP RANGE °C: ..... -40 to 135

RESISTANCE: ..... <10mΩ@20mV

VOLTAGE DROP: ..... <4.0mV/amp

CENTERLINE SPACING (mm): 6.0

BLADE WIDTH (mm): 2.8

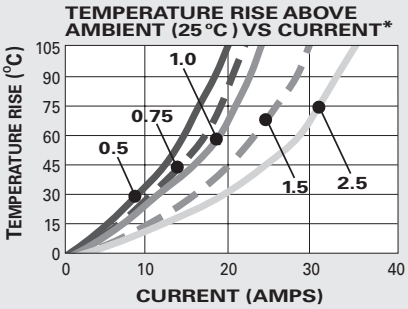

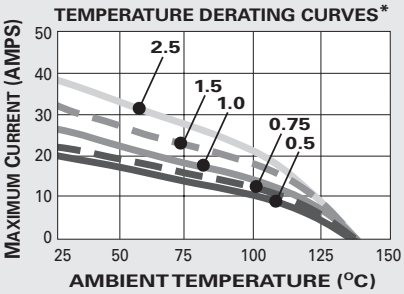

*The test data are based on single circuits in free space and were generated using a "Lumped Resistance" model. This model does not account for all of the variables that would be present in an actual application. For actual product performance, contact your regional support representative.

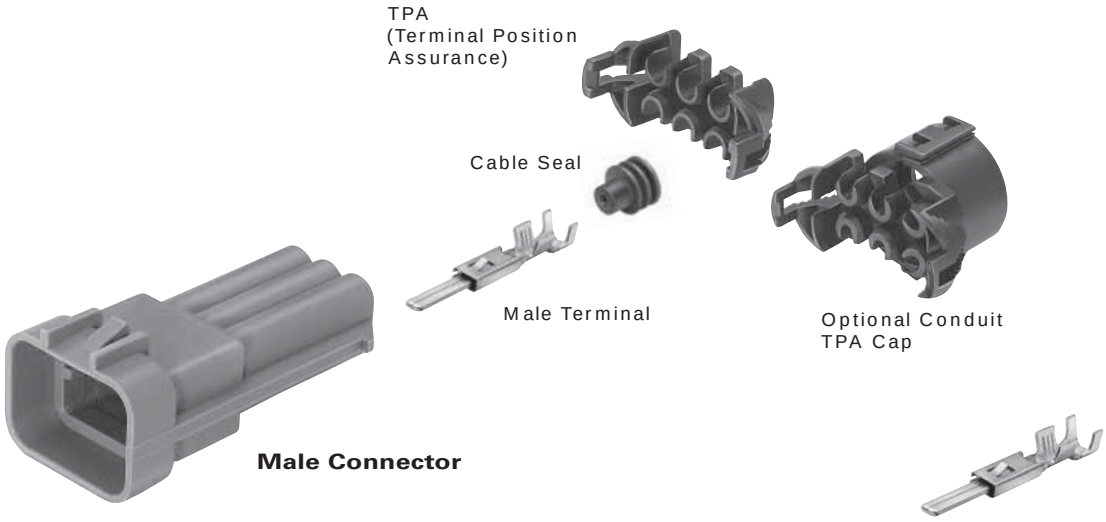

2.8 Male Connector Sealed

# Cavities	Connector	Color	Material	TPA
6	12185126	Gray	PA6	12185000
Optional Conduit	TPA Cap	Black	PA6	10717815

2.8 Male Terminals Sealed

Part #	Cable Range (mm²)	Material	Plating
12185129	1.5-0.5	Copper Nickel Silicon Alloy	Tin
12185237	2.5-1.5	Copper Nickel Silicon Alloy	Tin

2.8 Ducon Cavity Plugs*

Part #	Cavity Inside Dia.	Material	Color
15337197	5.2mm	Silicone	White
10730124	5.2mm	Silicone	Green

*Cavity plugs seal unused female and male cavities.

SECTION NOTES:

- Ducon Connection Systems have been validated using DIN Cable Standards.

NOTE: Specifications in this catalog are for general reference only and are subject to change without notice. To verify product information, please contact a Delphi representative.

Peters de Laet
503-661-5088 – phone 503-661-5328 – fax
www.pdel.com

2.8

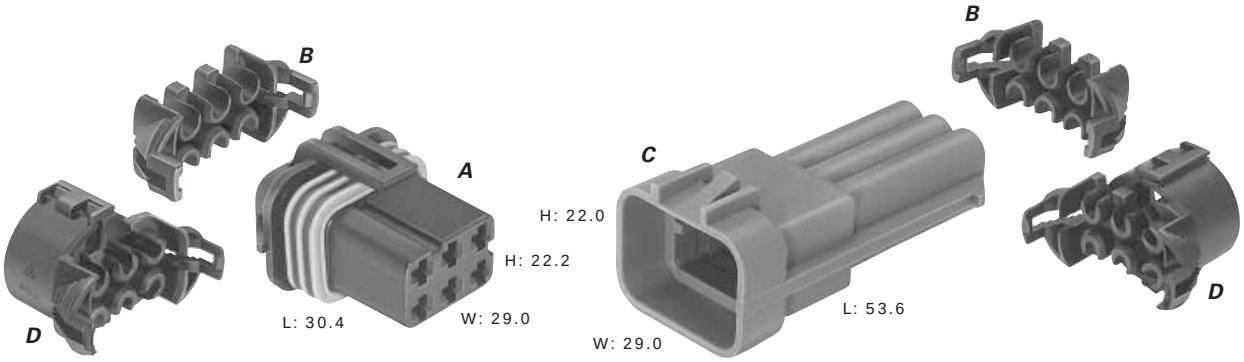

Total Mated Length: 67.0mm

A. Part No: 15344052

Description:	Connector Assembly 6F
Size:	30.4L x 22.2H x 29.0W
Color:	Black
Material:	PA6
Terminals:	See Page 5.10

B. Part No: 12185000

Description:	TPA
Number Req:	2
Color:	Black
Material:	PA6

C. Part No: 12185126

Description:	Connector 6M (Clip Slot)
Size:	53.6L x 22.0H x 29.0W
Color:	Gray
Material:	PA6
Terminals:	See Page 5.11

D. Part No: 10717815 (Optional)

Description:	Conduit TPA Cap
Number Req:	2
Color:	Black
Material:	PA6

NOTE: Specifications in this catalog are for general reference only and are subject to change without notice. To verify product information, please contact a Delphi representative.

Peters de Laet
503-661-5088 – phone 503-661-5328 – fax
www.pdel.com

2.8 Device Connections

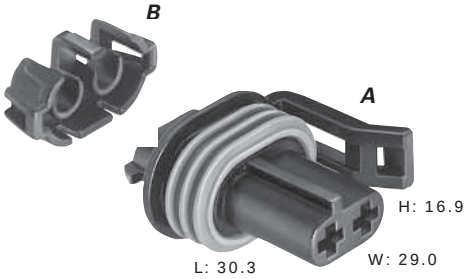

A. Part No: 12185026* (Black)
15344040* (Blue)
15344042* (White)

Description:	Connector 2F
Size:	30.3L x 16.9H x 29.0W
Material:	PA6
Terminals:	See Page 5.10

*Different indexing features.

B. Part No: 12185027

Description:	TPA
Color:	Black
Material:	PA6

NOTE: Specifications in this catalog are for general reference only and are subject to change without notice. To verify product information, please contact a Delphi representative.

Peters de Laet
503-661-5088 – phone 503-661-5328 – fax
www.pdel.com

4.8 Device Connections

Unsealed System Application Information

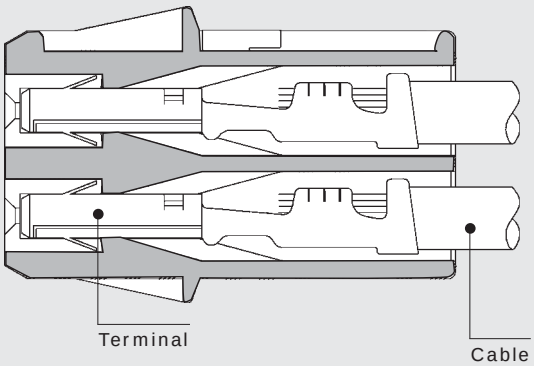

4.8 Series Terminals – Tin Plated

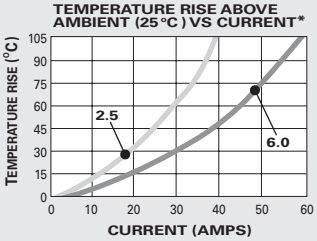

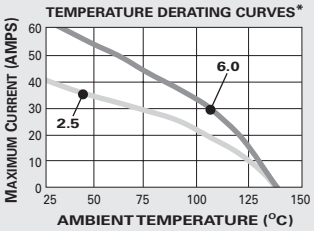

CABLE RANGE (mm²): 0.5-6.0
CURRENT RANGE (AMPS): 45
TEMP RANGE °C: ..... -40 to 135
RESISTANCE: ..... <10mΩ@20mV

VOLTAGE DROP: ..... <4.0mV/amp
CENTERLINE SPACING (mm): 6.8
BLADE WIDTH (mm): 4.8

*The test data are based on single circuits in free space and were generated using a "Lumped Resistance" model. This model does not account for all of the variables that would be present in an actual application. For actual product performance, contact your regional support representative.

Female Terminal

Secondary Lock

Female Connector

4.8 Female Terminals Unsealed

Part #	Cable Range (mm²)	Material	Plating
12185227	1.0-0.5	Copper Nickel Silicon Alloy	Tin
12147596	2.5-1.5	Copper Nickel Silicon Alloy	Tin
12147597	6.0-4.0	Copper Nickel Silicon Alloy	Tin

4.8 Female Connectors Unsealed

# Cavities	Connector	Color	Material	Secondary Lock
5	12147099	Black	PA6	12147098
6	15344072	Black	PA6	10717827
9	10740403	Black	PA6	10740404
12	10717711	Black	PA6	10717826

NOTE: Specifications in this catalog are for general reference only and are subject to change without notice. To verify product information, please contact a Delphi representative.

Peters de Laet
503-661-5088 – phone 503-661-5328 – fax
www.pdel.com

4.8 Device Connections

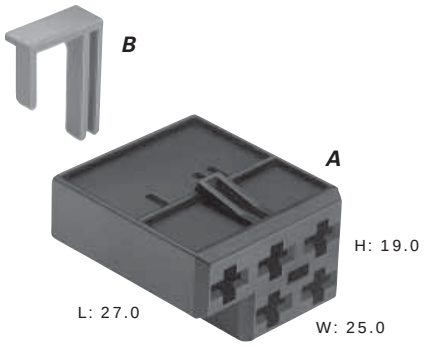

A. Part No: 12147099

Description:	Connector 5F
Size:	27.0L x 19.0H x 25.0W
Color:	Black
Material:	PA6
Terminals:	See Page 5.14
Typical App:	Blower Switch, Heater

B. Part No: 12147098

Description:	Secondary Lock
Color:	Gray
Material:	PA6 15% GF

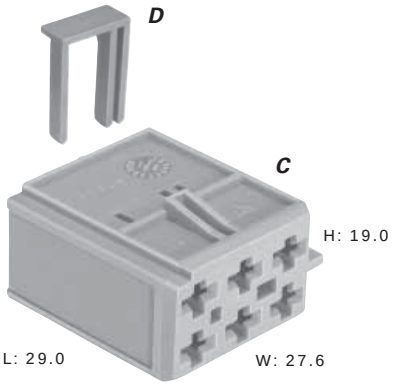

C. Part No: 15344072

Description:	Connector 6F
Size:	29.0L x 19.0H x 27.6W
Color:	Blue
Material:	PA6
Terminals:	See Page 5.14
Typical App:	Blower Switch, Heater

D. Part No: 10717827

Description:	Secondary Lock
Color:	Gray
Material:	PA6 15% GF

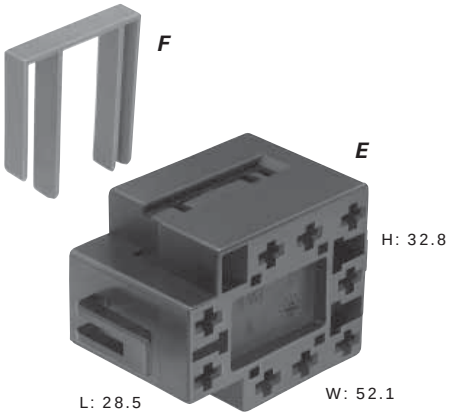

E. Part No: 10740403

Description:	Connector 9F
Size:	28.5L x 32.8H x 52.1W
Color:	Black
Material:	PA6
Terminals:	See Page 5.14
Typical App:	Blower Switch

F. Part No: 10740404

Description:	Secondary Lock
Color:	Gray
Material:	PA6 15% GF

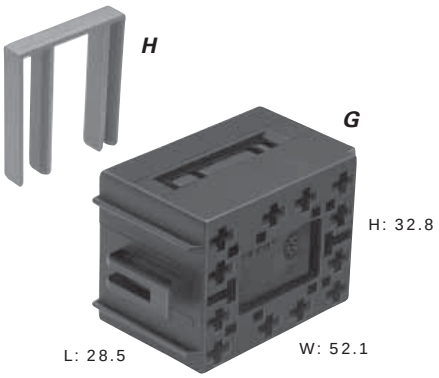

G. Part No: 10717711

Description:	Connector 12F
Size:	28.5L x 32.8H x 52.1W
Color:	Black
Material:	PA6
Terminals:	See Page 5.14
Typical App:	Blower Switch

H. Part No: 10717826

Description:	Secondary Lock
Color:	Gray
Material:	PA6 15% GF

NOTE: Specifications in this catalog are for general reference only and are subject to change without notice. To verify product information, please contact a Delphi representative.

Peters de Laet
503-661-5088 – phone 503-661-5328 – fax
www.pdel.com

6.3

Cross Sectional View

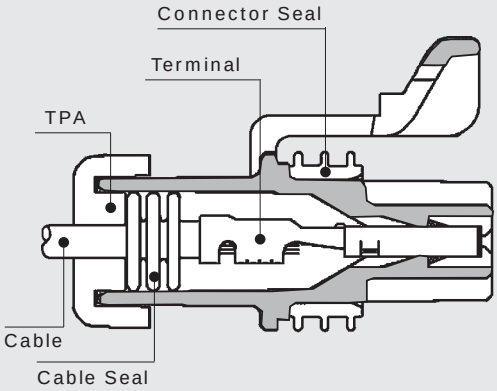

Female Connector Assembly

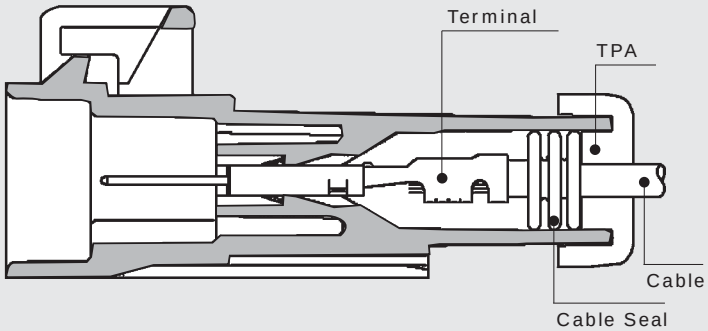

Male Connector

TPA
(Terminal Position
Assurance)

Female
Terminal

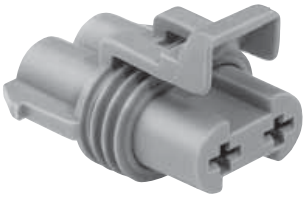

Female Connector

6.3 Female Terminals Sealed

Part #	Cable Range (mm²)	Material	Plating
12147473	2.5-1.5	Copper Nickel Silicon Alloy	Tin
12147474	6.0-4.0	Copper Nickel Silicon Alloy	Tin

6.3 Ducon Cable Seals

Reel Part #	Loose Part #	Cable Dia.	Material	Color
10730240	15324997	2.40-1.60	Silicone	Lt. Brown
12059259	15324995	2.90-2.00	Silicone	Dk. Red
10730241	15324994	3.80-2.80	Silicone	Gray
15344032	15324996	4.50-3.60	Silicone	Blue

6.3 Female Connector Assembly Sealed

# Cavities	Connector	Color	Material	TPA
2	12147067	Gray	PA66	12147060

NOTE: Specifications in this catalog are for general reference only and are subject to change without notice. To verify product information, please contact a Delphi representative.

Peters de Laet
503-661-5088 – phone 503-661-5328 – fax
www.pdel.com

6.3

Sealed System Application Information

CABLE RANGE (mm²): 1.5-6.0

CURRENT RANGE (AMPS): 55

TEMP RANGE °C: ..... -40 to 135

RESISTANCE: ..... <10mΩ@20mV

VOLTAGE DROP: ..... <4.0mV/amp

CENTERLINE SPACING (mm): 10.8

BLADE WIDTH (mm): 6.3

6.3 Series Terminals – Tin Plated

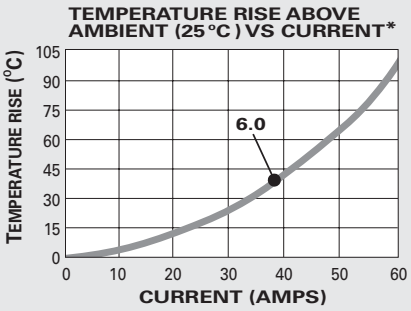

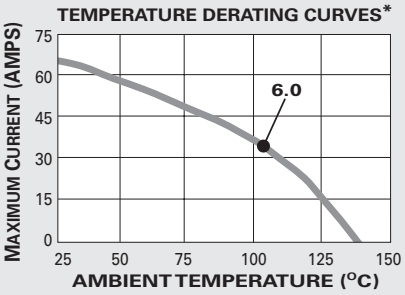

*The test data are based on single circuits in free space and were generated using a "Lumped Resistance" model. This model does not account for all of the variables that would be present in an actual application. For actual product performance, contact your regional support representative.

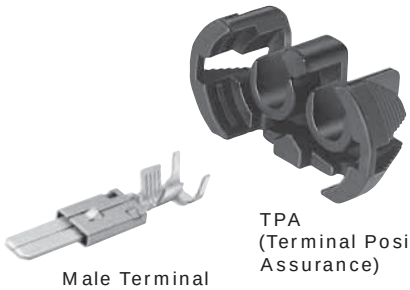

TPA
(Terminal Position Assurance)

Male Terminal

Male Connector

6.3 Male Terminals Sealed

Part #	Cable Range (mm²)	Material	Plating
15344632	2.5-1.5	Copper Nickel Silicon Alloy	Tin
15344631	6.0-4.0	Copper Nickel Silicon Alloy	Tin

6.3 Male Connector Sealed

# Cavities	Connector	Color	Material	TPA
2	15344054	Black	PA66	12147060

6.3 Ducon Cavity Plug*

Part #	Cavity Inside Dia.	Material	Color
12059255	9.8mm	Silicone	Green

*Cavity plugs seal unused female and male cavities.

SECTION NOTES:

- Ducon Connection Systems have been validated using DIN Cable Standards.

NOTE: Specifications in this catalog are for general reference only and are subject to change without notice. To verify product information, please contact a Delphi representative.

6.3

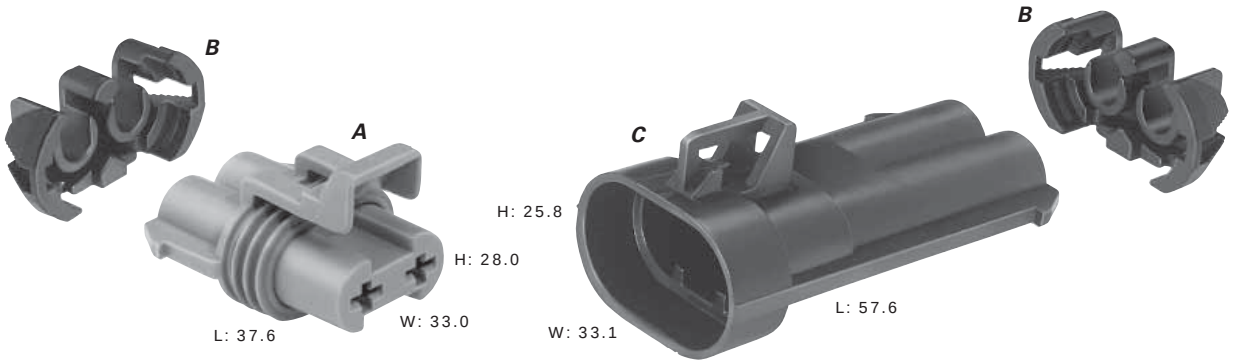

Total Mated Length: 80.0mm

A. Part No: 12147067

Description:	Connector 2F Assembly
Size:	37.6L x 28.0H x 33.0W
Color:	Gray
Material:	PA66
Terminals:	See Page 5.16

B. Part No: 12147060

Description:	TPA
Number Req:	2
Color:	Black
Material:	PA6

C. Part No: 15344054

Description:	Connector 2M (Clip Slot)
Size:	57.6L x 25.8H x 33.1W
Color:	Black
Material:	PA66
Terminals:	See Page 5.17

NOTE: Specifications in this catalog are for general reference only and are subject to change without notice. To verify product information, please contact a Delphi representative.

Peters de Laet
503-661-5088 – phone 503-661-5328 – fax
www.pdel.com

Peters de Laet
503-661-5088 – phone 503-661-5328 – fax
www.pdel.com

Mixed

Sealed System Application Information

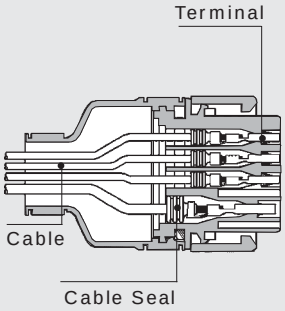

Female Connector Assembly

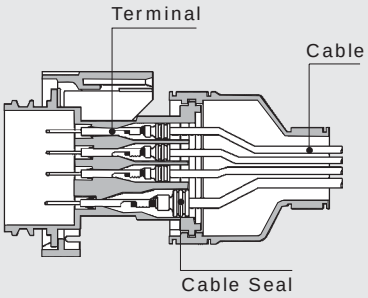

Male Connector

1.5 Series Terminals – Tin Plated

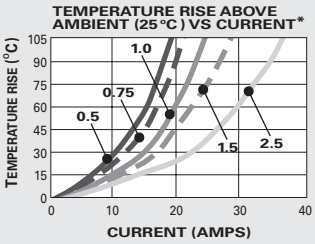

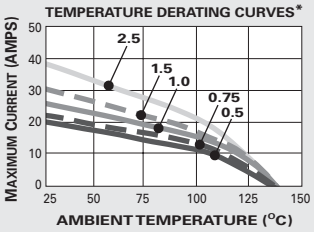

CABLE RANGE (mm²): 0.5-1.0
CURRENT RANGE (AMPS): 25
TEMP RANGE °C: ..... -40 to 135
RESISTANCE: ..... <10mΩ@20mV

VOLTAGE DROP: ..... <4.0mV/amp
CENTERLINE SPACING (mm): .....
..... Connector Dependent
BLADE WIDTH (mm): 1.5

*The test data are based on single circuits in free space and were generated using a "Lumped Resistance" model. This model does not account for all of the variables that would be present in an actual application. For actual product performance, contact your regional support representative.

1.5 Female Terminals Sealed

Part #	Cable Range (mm²)	Material	Plating
12158097	1.0-0.5	Copper Nickel Silicon Alloy	Tin
10717964	2.5-1.5	Copper Nickel Silicon Alloy	Tin

2.8 Female Terminals Sealed

Part #	Cable Range (mm²)	Material	Plating
12158098	1.0-0.5	Copper Nickel Silicon Alloy	Tin
12185008	2.5-1.5	Copper Nickel Silicon Alloy	Tin

4.8 Female Terminals Sealed

Part #	Cable Range (mm²)	Material	Plating
12185009	1.0-0.5	Copper Nickel Silicon Alloy	Tin
12185550	2.5-1.5	Copper Nickel Silicon Alloy	Tin
10717927	6.0-4.0	Copper Nickel Silicon Alloy	Tin

1.5 & 2.8 Ducon Cable Seals

Reel Part #	Loose Part #	Cable Dia.	Material	Color
12089442	15324974	2.00-1.20	Silicone	Blue
10720769	15324976	2.40-1.60	Silicone	White
15363992	15324973	2.90-2.00	Silicone	Dk. Red

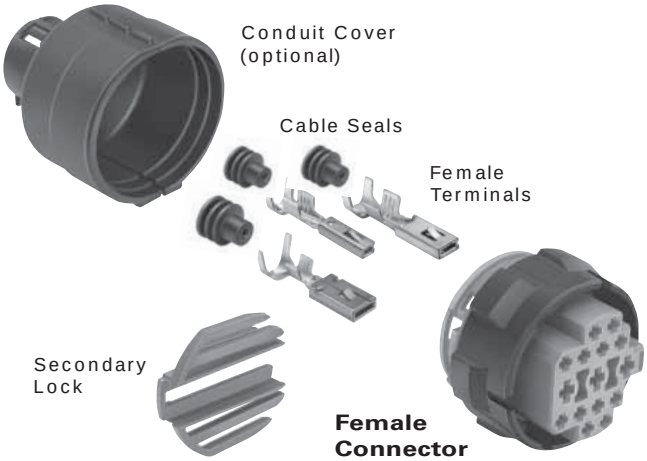

Mixed Female Connector Assemblies Sealed

# Cavities	Connector	Color	Material	Secondary Lock
15	15344069	Orange	PA66	12185005
20	12158095	Blue	PA66	12158096

4.8 Ducon Cable Seals

Reel Part #	Loose Part #	Cable Dia.	Material	Color
12052931	15324991	2.00-1.20	Silicone	Yellow
12048433	15324988	2.90-2.00	Silicone	White
12052452	15324989	3.80-2.80	Silicone	Red
12052453	15324990	4.50-3.80	Silicone	Violet

NOTE: Specifications in this catalog are for general reference only and are subject to change without notice. To verify product information, please contact a Delphi representative.

Peters de Laet
503-661-5088 – phone 503-661-5328 – fax
www.pdel.com

Mixed

Sealed System Application Information

2.8 Series Terminals – Tin Plated

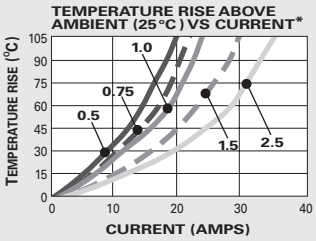

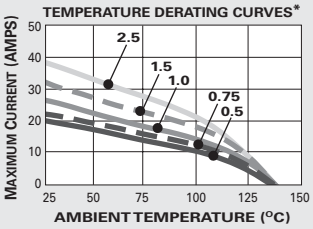

CABLE RANGE (mm²): 0.5-1.0
CURRENT RANGE (AMPS): 33
TEMP RANGE °C: ..... -40 to 135
RESISTANCE: ..... <10mΩ@20mV

VOLTAGE DROP: ..... <4.0mV/amp
CENTERLINE SPACING (mm): .....
..... Connector Dependent
BLADE WIDTH (mm): 2.8

4.8 Series Terminals – Tin Plated

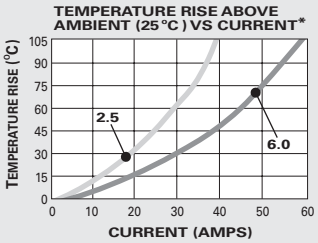

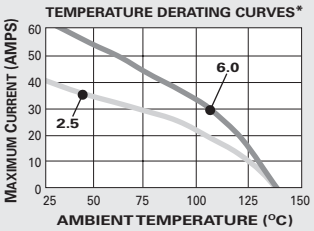

CABLE RANGE (mm²): 0.5-2.5
CURRENT RANGE (AMPS): 45
TEMP RANGE °C: ..... -40 to 135
RESISTANCE: ..... <10mΩ@20mV

VOLTAGE DROP: ..... <4.0mV/amp
CENTERLINE SPACING (mm): .....
..... Connector Dependent
BLADE WIDTH (mm): 4.8

*The test data are based on single circuits in free space and were generated using a "Lumped Resistance" model. This model does not account for all of the variables that would be present in an actual application. For actual product performance, contact your regional support representative.

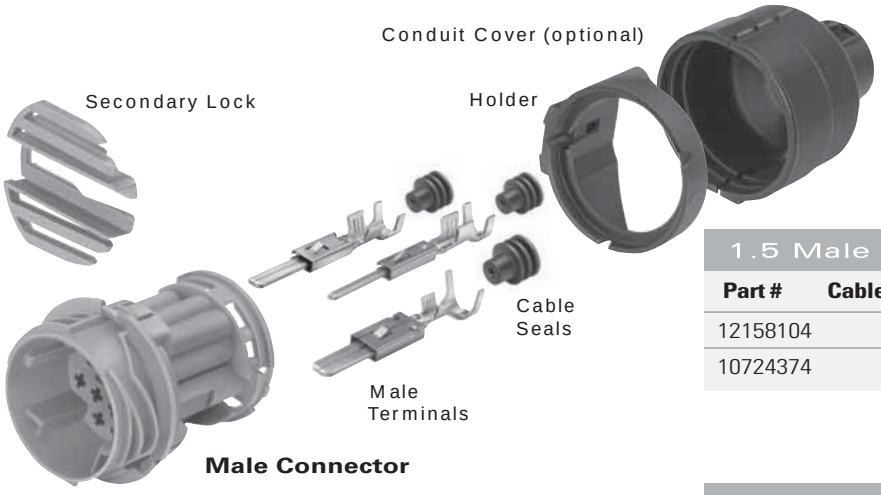

1.5 Male Terminals Sealed

Part #	Cable Range (mm²)	Material	Plating
12158104	1.0-0.5	Copper Nickel Silicon Alloy	Tin
10724374	2.5-1.5	Copper Nickel Silicon Alloy	Tin

2.8 Male Terminals Sealed

Part #	Cable Range (mm²)	Material	Plating
12185129	1.0-0.5	Copper Nickel Silicon Alloy	Tin
12185237	2.5-1.5	Copper Nickel Silicon Alloy	Tin

4.8 Male Terminals Sealed

Part #	Cable Range (mm²)	Material	Plating
12185235	1.0-0.5	Copper Nickel Silicon Alloy	Tin
12185236	2.5-1.5	Copper Nickel Silicon Alloy	Tin
10724435	6.0-4.0	Copper Nickel Silicon Alloy	Tin

Mixed Male Connectors Sealed

# Cavities	Connector	Color	Material	Secondary Lock
15	10740396	Orange	PA66	12185005
20	10717689	Blue	PA66	12158096

1.5 & 2.8

4.8

1.5 & 2.8 Ducon Cavity Plugs*

Part #	Cavity Inside Dia.	Material	Color
15337197	5.2mm	Silicone	White
10730124	5.2mm	Silicone	Green

4.8 Ducon Cavity Plug*

12066082	8.5mm	Silicone	Green

*Cavity plugs seal unused female and male cavities.

SECTION NOTES:

- Ducon Connection Systems have been validated using DIN Cable Standards.

NOTE: Specifications in this catalog are for general reference only and are subject to change without notice. To verify product information, please contact a Delphi representative.

Peters de Laet
503-661-5088 – phone 503-661-5328 – fax
www.pdel.com

Mixed

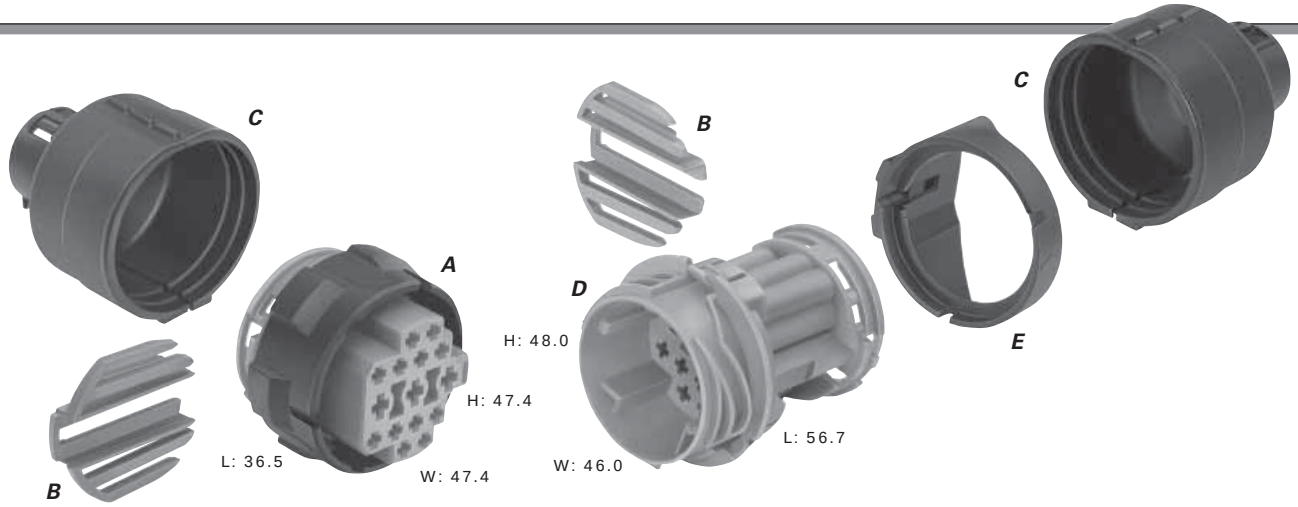

Total Mated Length: 148.0mm

A. Part No: 15344069 (Orange)

Description:	Connector 15F

Part No: 12185004 (Green)

Description:	Connector 11F

Part No: 15344061 (Brown)

Description:	Connector 6F
Size:	36.5L x 47.4H x 47.4W
Material:	PA66
Terminals:	See Page 5.20
Seals/Plugs:	See Page 5.20

B. Part No: 12185005

Description:	Secondary Lock
Number Req:	2
Color:	Gray
Material:	PA6 15% GF

C. Part No: 12197134 (Optional)

Description:	Cover
Number Req:	2
Color:	Black
Material:	PA6
Note:	Optional 90˚ cover available.

D. Part No: 10740396 (Orange)

Description:	Connector 15M

Part No: 12185278 (Green)

Description:	Connector 11M

Part No: 15344060 (Brown)

Description:	Connector 6M
Size:	56.7L x 48.0H x 46.0W
Material:	PA66
Terminals:	See Page 5.21

E. Part No: 12185277 (Optional)

Description:	Holder
Color:	Black
Material:	PA6 15% GF
Note:	Other holders available.

KEY:

✧ 2.8 SERIES
✻ 4.8 SERIES

Mixed connectors feature a combination of different terminal cavities, as indicated by the key.

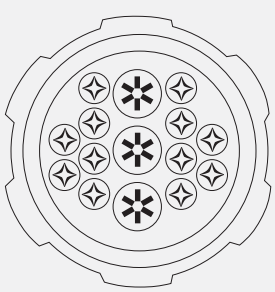

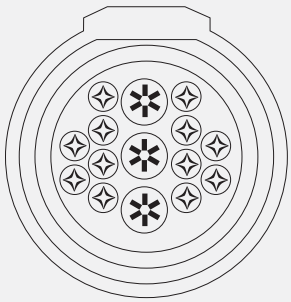

NOTE: Specifications in this catalog are for general reference only and are subject to change without notice. To verify product information, please contact a Delphi representative.

Peters de Laet
503-661-5088 – phone 503-661-5328 – fax
www.pdel.com

Mixed

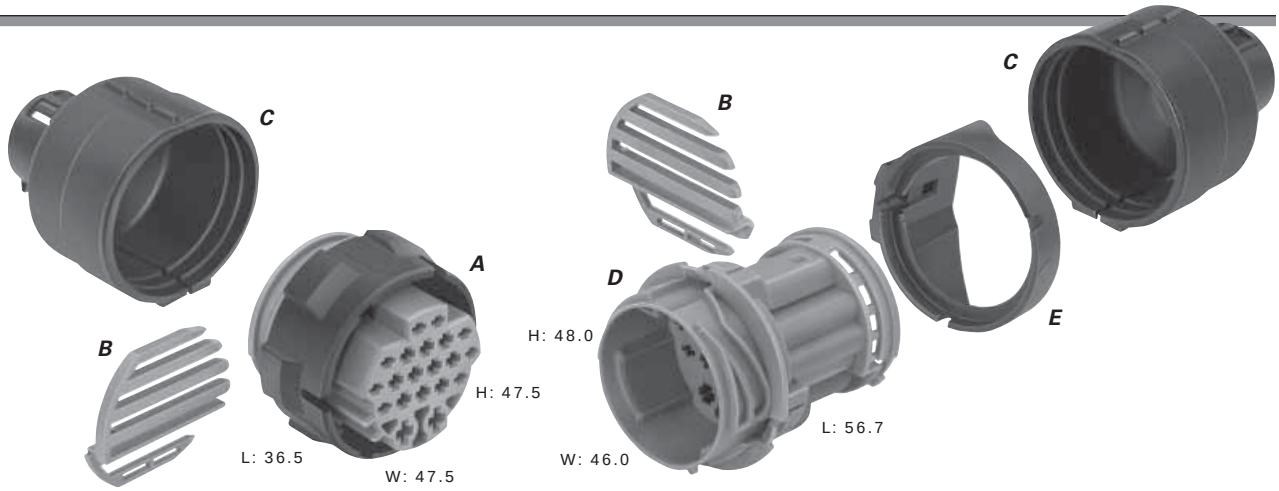

Total Mated Length: 148.0mm

A. Part No: 12158095

Description:	Connector 20F
Size:	36.5L x 47.5H x 47.5W
Color:	Blue
Material:	PA66
Terminals:	See Page 5.20
Seals/Plugs:	See Page 5.20

B. Part No: 12158096

Description:	Secondary Lock
Number Req:	2
Color:	Gray
Material:	PA6 15% GF

C. Part No: 12197134 (Optional)

Description:	Cover
Number Req:	2
Color:	Black
Material:	PA6
Note:	Optional 90˚ cover available.

D. Part No: 10717689

Description:	Connector 20M
Size:	56.7L x 48.0H x 46.0W
Color:	Blue
Material:	PA66
Terminals:	See Page 5.21
Seals/Plugs:	See Page 5.21

E. Part No: 12185277 (Optional)

Description:	Holder
Color:	Black
Material:	PA6 15% GF
Note:	Other holders available.

KEY:

✦ 1.5 SERIES
✧ 2.8 SERIES
✻ 4.8 SERIES

Mixed connectors feature a combination of different terminal cavities, as indicated by the key.

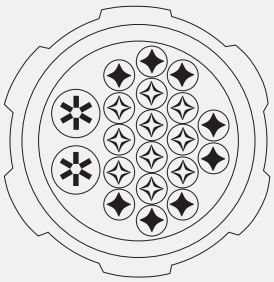

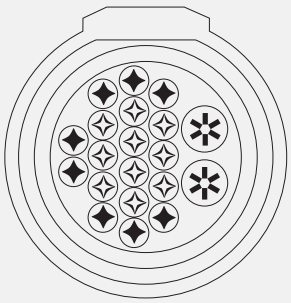

NOTE: Specifications in this catalog are for general reference only and are subject to change without notice. To verify product information, please contact a Delphi representative.

Peters de Laet
503-661-5088 – phone 503-661-5328 – fax
www.pdel.com

Door Connections

Sealed System Application Information

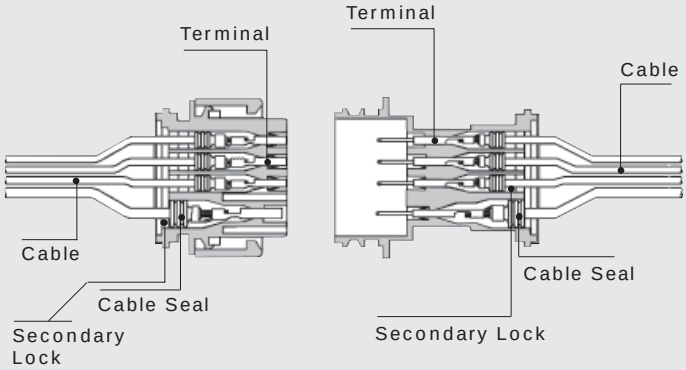

Female Connector Assembly

Male Connector

0.8 Series Terminals – Tin Plated

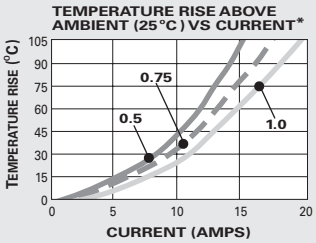

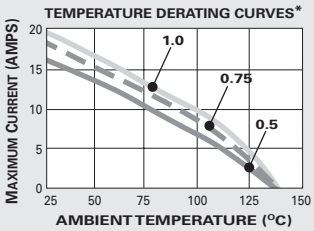

CABLE RANGE (mm²): 0.5-1.0
CURRENT RANGE (AMPS): 0-15
TEMP RANGE °C: ..... -40 to 135
RESISTANCE: ..... <10mΩ@20mV
VOLTAGE DROP: ..... <4.0mV/amp
CENTERLINE SPACING (mm): 3.0
BLADE WIDTH (mm): 0.8

*The test data are based on single circuits in free space and were generated using a "Lumped Resistance" model. This model does not account for all of the variables that would be present in an actual application. For actual product performance, contact your regional support representative.

0.8 Female Terminal Unsealed

Part #	Cable Range (mm²)	Material	Plating
12131423	1.0-0.5	Copper Nickel Silicon Alloy	Tin

0.8 Female Terminal Sealed

Part #	Cable Range (mm²)	Material	Plating
10717928	1.0-0.5	Copper Nickel Silicon Alloy	Tin

1.5 Female Terminals Unsealed

Part #	Cable Range (mm²)	Material	Plating
12147302	1.0-0.5	Copper Nickel Silicon Alloy	Tin
12147303	2.5-1.5	Copper Nickel Silicon Alloy	Tin

2.8 Female Terminals Unsealed

Part #	Cable Range (mm²)	Material	Plating
12147451	1.0-0.5	Copper Nickel Silicon Alloy	Tin
12147304	2.5-1.5	Copper Nickel Silicon Alloy	Tin

0.8 Ducon Cable Seal

Part #	Cable Range (mm²)	Material	Color
15344324	2.1-1.2	Silicon	Dk. Red

Door connectors provide environmental sealing in two ways:

1. Using sealed terminal systems.
2. Using unsealed terminal systems and protective grommets.

Contact your regional support representative for assistance in choosing the proper design for your application.

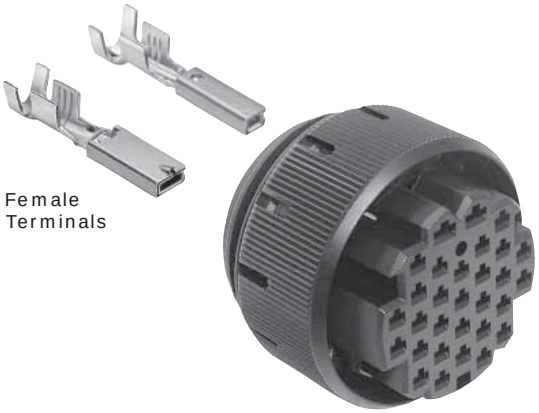

Female Connector

Mixed Female Connectors Sealed

# Cavities	Connector	Color	Material
30	12147161	Black	PA66
40	15327160	Black	PA66 15% GF

NOTE: Specifications in this catalog are for general reference only and are subject to change without notice. To verify product information, please contact a Delphi representative.

Peters de Laet
503-661-5088 – phone 503-661-5328 – fax
www.pdel.com

Door Connections

Sealed System Application Information

1.5 Series Terminals – Tin Plated

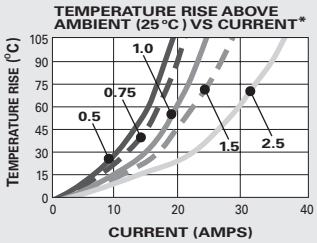

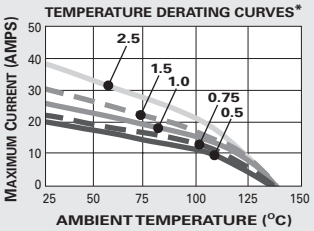

CABLE RANGE (mm²): 0.5-1.0
CURRENT RANGE (AMPS): 25
TEMP RANGE °C: ..... -40 to 135
RESISTANCE: ..... <10mΩ@20mV

VOLTAGE DROP: ..... <4.0mV/amp
CENTERLINE SPACING (mm): .....
..... Connector Dependent
BLADE WIDTH (mm): 1.5

2.8 Series Terminals – Tin Plated

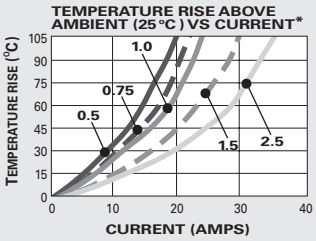

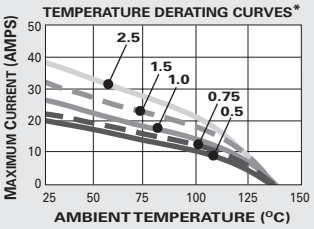

CABLE RANGE (mm²): 0.5-2.5
CURRENT RANGE (AMPS): 33
TEMP RANGE °C: ..... -40 to 135
RESISTANCE: ..... <10mΩ@20mV

VOLTAGE DROP: ..... <4.0mV/amp
CENTERLINE SPACING (mm): .....
..... Connector Dependent
BLADE WIDTH (mm): 2.8

*The test data are based on single circuits in free space and were generated using a "Lumped Resistance" model. This model does not account for all of the variables that would be present in an actual application. For actual product performance, contact your regional support representatives.

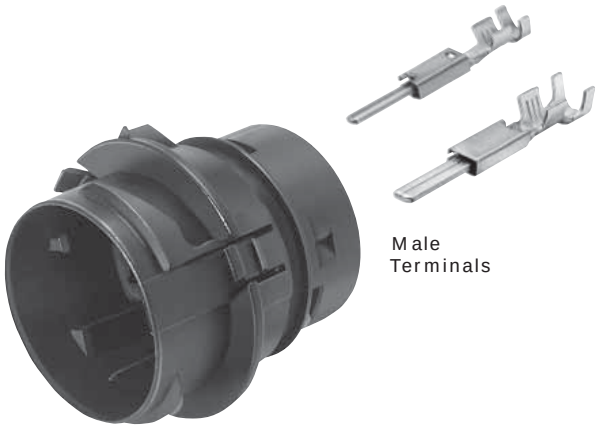

Male Connector

0.8 Male Terminal Unsealed

Part #	Cable Range (mm²)	Material	Plating
15327159	1.0-0.5	Copper Nickel Silicon Alloy	Tin

0.8 Male Terminal Sealed

Part #	Cable Range (mm²)	Material	Plating
10724459	1.0-0.5	Copper Nickel Silicon Alloy	Tin

1.5 Male Terminals Unsealed

Part #	Cable Range (mm²)	Material	Plating
12147299	1.0-0.5	Copper Nickel Silicon Alloy	Tin
12147300	2.5-1.5	Copper Nickel Silicon Alloy	Tin

2.8 Male Terminals Unsealed

Part #	Cable Range (mm²)	Material	Plating
12147400	1.0-0.5	Copper Nickel Silicon Alloy	Tin
12147301	2.5-1.5	Copper Nickel Silicon Alloy	Tin

Mixed Male Connectors Sealed

# Cavities	Connector	Color	Material
30	12147066	Black	PA66
40	10730244	Black	PA66 15% GF

0.8 Ducon Cable Seal

Part #	Cable Range (mm²)	Material	Color
15344324	2.1-1.2	Silicon	Dk. Red

NOTE: Specifications in this catalog are for general reference only and are subject to change without notice. To verify product information, please contact a Delphi representative.

Peters de Laet
503-661-5088 – phone 503-661-5328 – fax
www.pdel.com

Door Connections

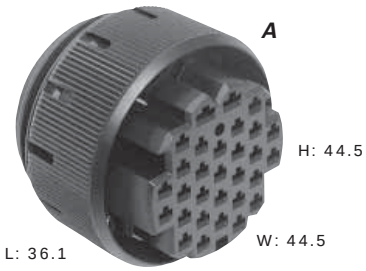

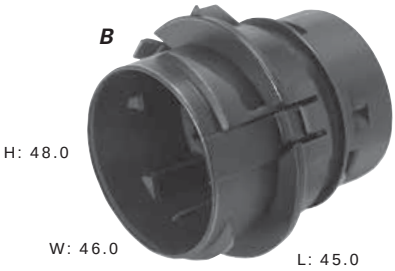

Total Mated Length: 59.6mm

A. Part No: 12147161

Description:	1.5/2.8 Connector 30F
Size:	36.1L x 44.5H x 44.5W
Color:	Black
Material:	PA66
Terminals:	See Page 5.24

B. Part No: 12147066

Description:	1.5/2.8 Connector 30M
Size:	45.0L x 48.0H x 46.0W
Color:	Black
Material:	PA66
Terminals:	See Page 5.25

SECTION NOTES:

- Contact your regional support representative.
- Door grommets available from manufacturer.

KEY:

✦ 1.5 SERIES
✧ 2.8 SERIES

Mixed connectors feature a combination of different terminal cavities, as indicated by the key.

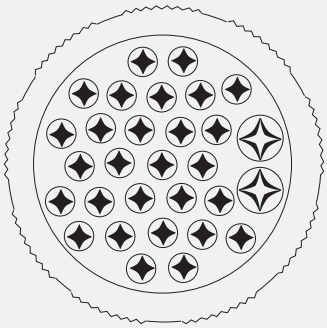

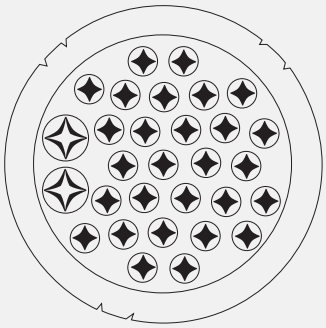

NOTE: Specifications in this catalog are for general reference only and are subject to change without notice. To verify product information, please contact a Delphi representative.

Peters de Laet
503-661-5088 – phone 503-661-5328 – fax
www.pdel.com

Door Connections

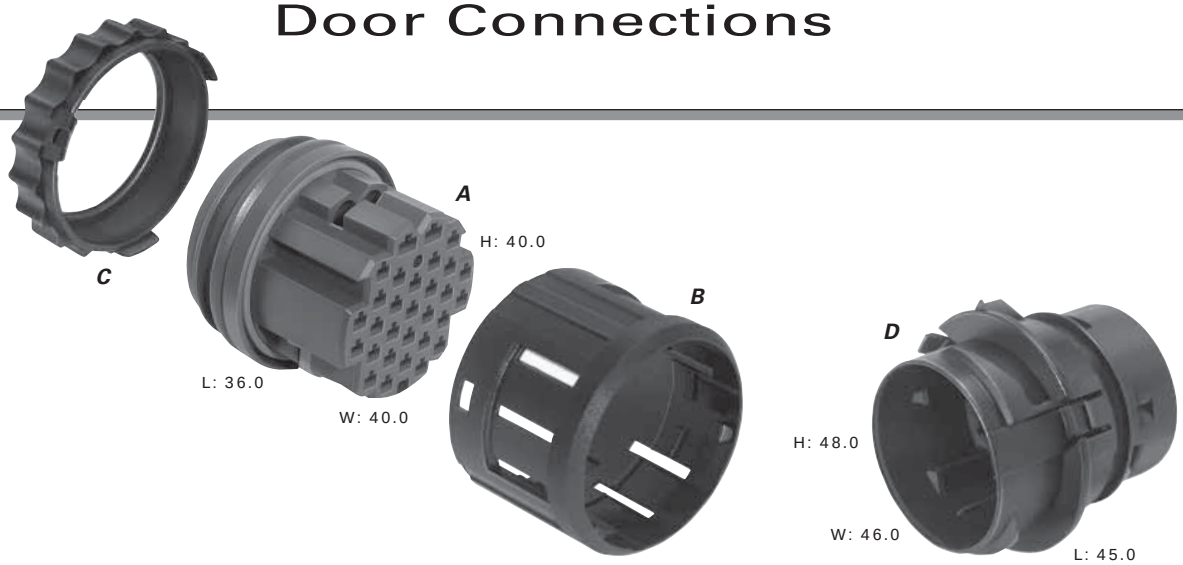

Total Mated Length: 71.6mm

A. Part No: 12185088

Description:	1.5/2.8 Connector 30F
Size:	36.0L x 40.0H x 40.0W
Color:	Black
Material:	PA66
Terminals:	See Page 5.24

B. Part No: 12185079

Description:	Ring
Color:	Black
Material:	PA6 15% GF

C. Part No: 12185082

Description:	Connector Ring
Color:	Black
Material:	PA6 15% GF

D. Part No: 12147066

Description:	1.5/2.8 Connector 30M
Size:	45.0L x 48.0H x 46.0W
Color:	Black
Material:	PA66
Terminals:	See Page 5.25

SECTION NOTES:

- Contact your regional support representative.
- Door grommets available from manufacturer.

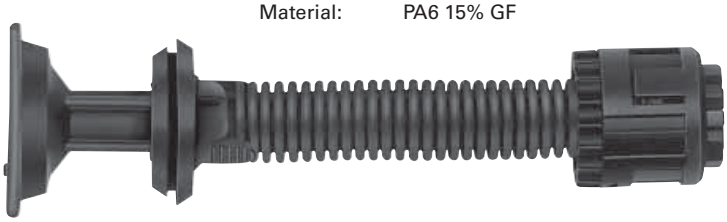

KEY:

✦ 1.5 SERIES
✧ 2.8 SERIES

Mixed connectors feature a combination of different terminal cavities, as indicated by the key.

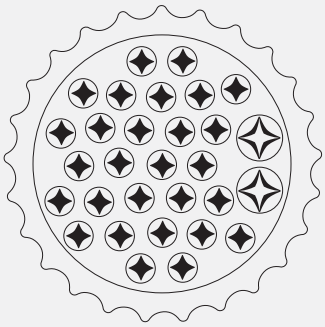

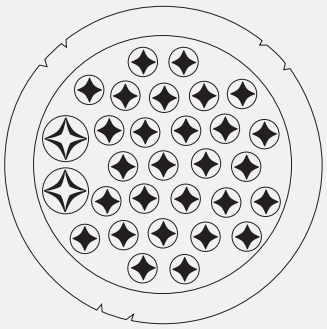

NOTE: Specifications in this catalog are for general reference only and are subject to change without notice. To verify product information, please contact a Delphi representative.

Peters de Laet
503-661-5088 – phone 503-661-5328 – fax
www.pdel.com

Door Connections

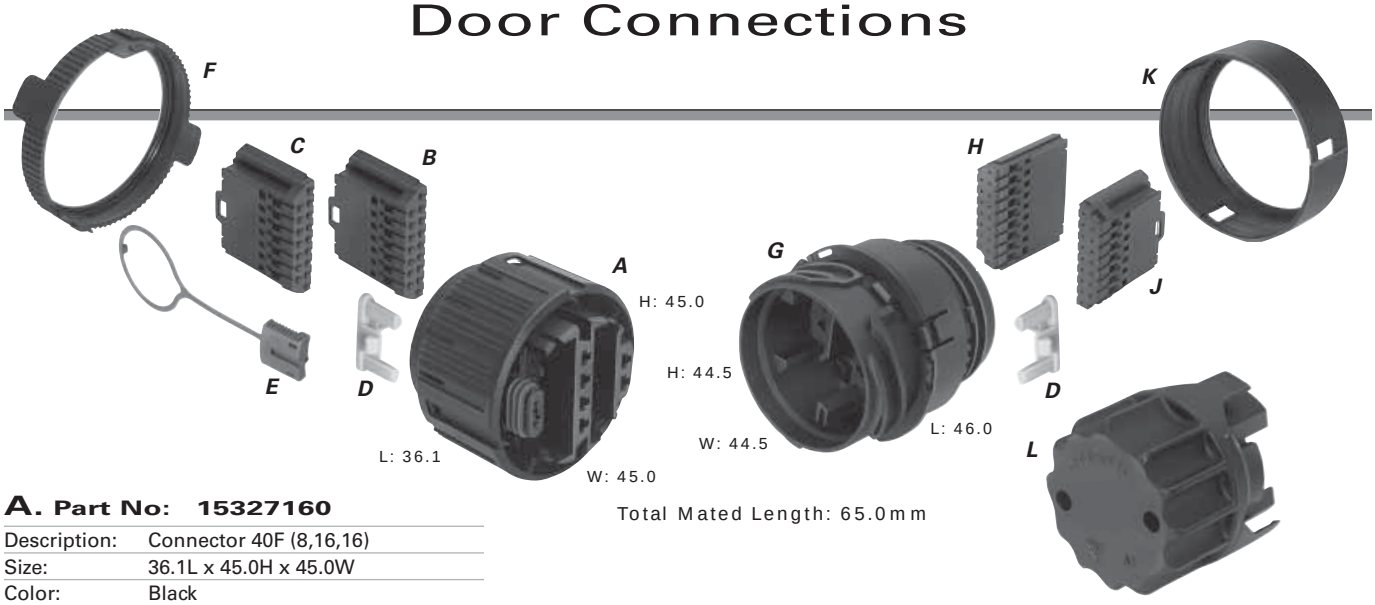

Total Mated Length: 65.0mm

A. Part No: 15327160

Description:	Connector 40F (8,16,16)
Size:	36.1L x 45.0H x 45.0W
Color:	Black
Material:	PA66 15% GF
Terminals:	.8F, 2.8F, See Page 5.24
Seals:	See Page 5.24

B. Part No: 15327654

Description:	Connector Module1 16F
Color:	Black
Material:	PA66

C. Part No: 15327655

Description:	Connector Module2 16F
Color:	Black
Material:	PA66

D. Part No: 10717849

Description:	TPA
Number Req:	2
Color:	Yellow
Material:	PA66

E. Part No: 10717837

Description:	CPA
Color:	Red
Material:	PA66

F. Part No: 15327164

Description:	Connector Ring
Color:	Black
Material:	PA66 15% GF

G. Part No: 10730244

Description:	Connector 40M (8,16,16)
Size:	46.0L x 44.5H x 44.5W
Color:	Black
Material:	PA66 15% GF
Terminals:	.8M, 2.8M, See Page 5.25
Seals:	See Page 5.25

H. Part No: 15327154

Description:	Connector Module1 16M
Color:	Black
Material:	PA66

J. Part No: 15327155

Description:	Connector Module2 16M
Color:	Black
Material:	PA66

K. Part No: 15327153

Description:	Cover
Color:	Black
Material:	PA66 15% GF

L. Part No: 10728148

Description:	TMS Cover
Color:	Black
Material:	PA66 15% GF

KEY: ❍ 0.8 SERIES (Sealed)
✱ 0.8 SERIES (Unsealed)
✧ 2.8 SERIES

Mixed connectors feature a combination of different terminal cavities, as indicated by the key.

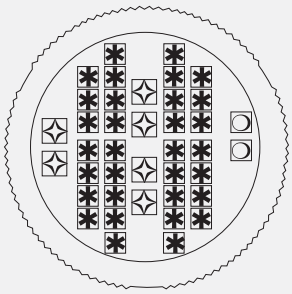

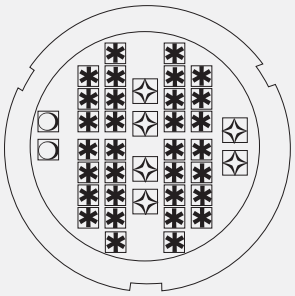

NOTE: Specifications in this catalog are for general reference only and are subject to change without notice. To verify product information, please contact a Delphi representative.

Peters de Laet
503-661-5088 – phone 503-661-5328 – fax
www.pdel.com

Lamp Sockets, Splice Savers, Weather-Pack, VF & DS Connections

Lamp Socket Features

- Advanced bulb to terminal interface technology
- Accommodates a wide variety of bulbs—B1, C2 bayonet, W2, W3 wedge, H7 with GT280 interface
- Available sealed or unsealed systems
- Multiple focal lengths
- Right angle or axial mounting features with easy assembly and release provisions

VF Series Features

- Accommodates a wide variety of devices
- Small overall dimensions
- Terminal Position Assurance (TPA)
- Connector Position Assurance (CPA)

DS Series Features

- Fuel injector applications
- High sealing protection
- Reliable electrical interface
- Secure locking mechanism

Weather-Pack Features

- Connector Position Assurance (CPA)
- Terminal Position Assurance (TPA)
- 20 Amps continuous maximum current rating
- Sealed system
- Pin and Sleeve configuration
- Dual locking tabs on terminals
- Low energy, low voltage capability
- -40˚C to 125˚C temperature range

Splice Saver Features

- Eliminates the need for solder
- Flexible configuration
- Uses 280 Metri-Pack or 150 GT terminals
- Uses ISO or SAE compatible terminals
- Low profile connector with cap lock
- Available in sealed/unsealed and grounded/non-grounded versions

Peters de Laet
503-661-5088 – phone 503-661-5328 – fax
www.pdel.com

Lamp Sockets

Lamp Sockets are a comprehensive and diverse product line featuring sophisticated connection systems technology. Available connection systems accommodate virtually every size and type of light bulb, as well as all varieties of bulb mounting features.

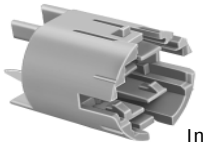

Lamp Socket Application Guidelines

Primary Use	Application	Socket Style	Bulb Base Type	Bulb Size	Typical Lamp Number	Part Number(s)	Page Number	Description
Stop, Turn, Backup and Cornering Lights	Sealed	Right Angle	W-3 Wedge	S-8	3156	12160393 15354859*	6.4	Single Filament
Stop/Tail, Park/Turn, Backup Lights and Cornering Lights	Sealed	Right Angle	W-3 Wedge	S-8	3057	12160394, 12160395 15354864*, 15354865*	6.4	Dual Filament
Stop/Tail, Park/Turn, Backup Lights and Cornering Lights	Sealed	Axial	W-3 Wedge	S-8	3057	12191243, 15435155	6.5	Dual Filament
Glove Box, Ash Tray Instrument Illumination and Courtesy Lights	Unsealed	Axial	W-2 Wedge	T-3 1/4	194	12162223, 12059952	6.6	Single Filament
Side Marker Lamps, Backup and Center High Mounted Stop Lights	Sealed Sealed	Axial Axial	W-2 Wedge W-2 Wedge	T-3 1/4 T5	168 912	15317651, 15324946 15324946	6.7	Single Filament Single Filament
Side Marker Lamps, Backup and Center High Mounted Stop Lights	Sealed	Right Angle	W-2 Wedge	T-3 1/4	168	12146418	6.7	Single Filament
Stop, Turn, Backup and Cornering Lights	Sealed	Right Angle	B-1 Bayonet	S-8	1156	12160386	6.8	Single Filament
Stop/Tail, Park/Turn, Backup Lights and Cornering Lights	Sealed	Right Angle	C-2 Bayonet	S-8	2057	12160390, 12160392	6.8	Dual Filament

* High temperature equivalent systems for continuously powered major filament applications.

Lamp Socket Bases

Part #	Application	Description	Color	Material	TPA	Insert	Seal
12160393	Sealed	W-3 Right Angle Wedge Base	Lt. Gray	PA66 HS IM	–	12177161	12129909*
12160394	Sealed	W-3 Right Angle Wedge Base	Cream	PA66 HS IM	–	12177163	12129909*
12160395	Sealed	W-3 Right Angle Wedge Base	Md. Gray	PA66 HS IM	–	12177163	12129909*
12191243	Sealed	W-3 Axial Wedge Base	Dk. Gray	PA66 HS IM 14% GF	15305473	–	12129909*
15435155	Sealed	W-3 Axial Wedge Base	Gray	PA66 HS IM 14% GF	15305473	–	12129909*
12162223	Unsealed	W-2 Axial Wedge Base	Clear	PC	12052490	–	–
12059952	Unsealed	W-2 Axial Wedge Base	Black	PA66 HS IM	15324722	–	–
15324946	Sealed	W-2 Axial Wedge Base	Dk. Gray	PA66 HS IM 14% GF	12110054	–	Part of 15324946 Asm
15317651	Sealed	W-2 Axial Wedge Base	Lt. Gray	PA66 HS 33% GF	12191522	–	15317652
12146418	Sealed	W-2 Right Angle Wedge Base	Lt. Gray	PA66 HS IM	–	15324428	12146398
12160386	Sealed	B-1 Right Angle Bayonet Base	Lt. Gray	PA66 HS IM	12129057	–	12129909*
12160390	Sealed	C-2 Right Angle Bayonet Base	Cream	PA66 HS IM	12129051	–	12129909*
12160392	Sealed	C-2 Right Angle Bayonet Base	Md. Gray	PA66 HS IM	12129051	–	12129909*

* When an unsealed application is required, use gasket 12020720 in place of seal 12129909.

NOTE: Specifications in this catalog are for general reference only and are subject to change without notice. To verify product information, please contact a Delphi representative.

Peters de Laet
503-661-5088 – phone 503-661-5328 – fax
www.pdel.com

Lamp Sockets

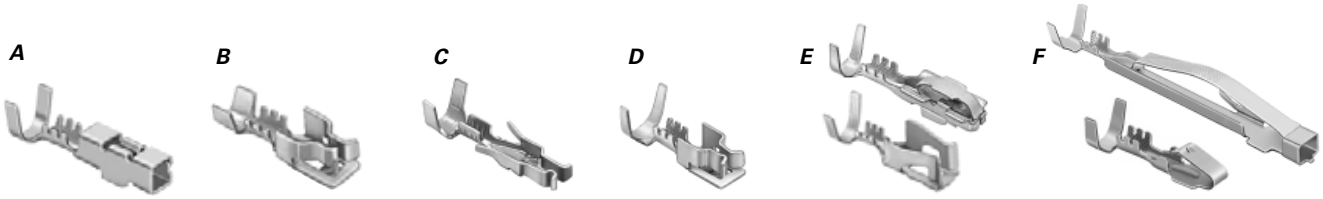

Lamp Socket Terminals

Series	Type	Application	Cable Seal Series	Terminal Part #	Cable Range	Material	Plating
A							
W-2, W-3 Right Angle	–	Sealed	280	12066639	2.0-1.0	Tin Brass	Tin
W-2, W-3 Right Angle	–	Sealed	280	12066638	0.80-0.50	Tin Brass	Tin
W-2, W-3 Right Angle	–	Sealed	280	12186320	0.50-0.35	Tin Brass	Tin
B							
W-2 Axial	–	Unsealed	–	12089139	0.80-0.50	Brass	Copper/Tin
W-2 Axial	–	Unsealed	–	12089137	3.0	Brass	Copper/Tin
C							
W-2 Axial	–	Sealed	280	12176852	1.0-0.80	Brass	Tin
W-2 Axial	–	Sealed	280	12176853	0.50-0.35	Brass	Tin
D							
W-2 Axial	–	Sealed	480	12124471	1.0-0.80	Brass	Copper/Tin
W-2 Axial	–	Sealed	480	12124598	0.50-0.35	Brass	Copper/Tin
E							
W-3 Axial	Contact	Sealed	280	12092058	0.80-0.50	Tin Brass	Tin
W-3 Axial	Contact	Sealed	280	12088187	0.50-0.35	Tin Brass	Tin
W-3 Axial	Ground	Sealed	630	12092030	0.80-0.50	Tin Brass	Tin
F							
B-1, C-2	Contact	Sealed	280	12129052	1.0-0.80	Stainless Steel	Tin
B-1, C-2	Contact	Sealed	280	15304622	0.50-0.35	Stainless Steel	Tin
B-1, C-2	Ground	Sealed	280	12129053	1.0-0.80	Tin Brass	Tin
B-1, C-2	Ground	Sealed	280	15304621	0.50-0.35	Tin Brass	Tin

Metri-Pack Cable Seals

Series	Reel Part #	Loose Part #	Cable Diameter	Material	Color
280	12015284	15324982	2.85-2.03	Silicone	Green
280	12034365	15324983	1.70-1.29	Silicone	Dk. Red
280	12041352	15324984	2.42-2.03	Silicone	Tan
280	12089444	15324985	2.15-1.60	Silicone	Purple
480	12048433	15324988	2.85-2.01	Silicone	White
480	12052931	15324991	2.15-1.60	Silicone	Yellow
630	12077760	15324997	2.40-1.65	Silicone	Tan

NOTE: Specifications in this catalog are for general reference only and are subject to change without notice. To verify product information, please contact a Delphi representative.

Peters de Laet
503-661-5088 – phone 503-661-5328 – fax
www.pdel.com

Lamp Sockets

A. Part No: 12160393 (Lt. Gray)
15326290 (Cream)
15326291* (Cream)

Description:	W-3 Right Angle Wedge Base
Size:	26.7 Hole Dia. x 31.9L x 51.7H x 40.0W
Material:	PA66 HS IM
Terminals:	See A, Page 6.3
Seals:	280 Metri-Pack Cable Seals
Typical Lamp:	#3156
*Note:	Focal Length: 29.14mm.

B. Part No: 12129909*

Description:	Seal
Color:	Black
Material:	EPDM

C. Part No: 12177161

Description:	Insert with Terminals
Color:	Lt. Gray
Material:	PA66 HS IM

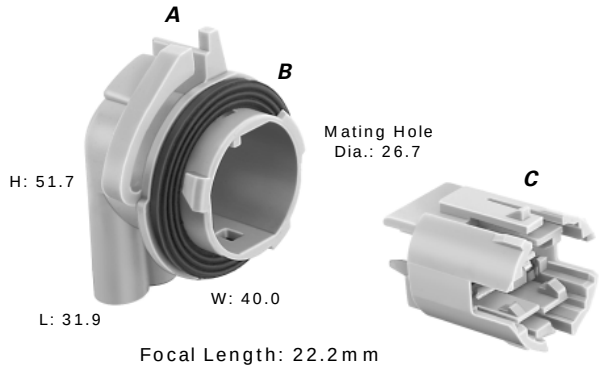

Focal Length: 22.2mm
*29.1mm

D. Part No: 12160394

Description:	W-3 Right Angle Wedge Base
Size:	26.7 Hole Dia. x 31.9L x 51.7H x 40.0W
Color:	Cream
Material:	PA66 HS IM
Terminals:	See A, Page 6.3
Seals:	280 Metri-Pack Cable Seals
Typical Lamp:	#3057

E. Part No: 12129909*

Description:	Seal
Color:	Black
Material:	EPDM

F. Part No: 12177163

Description:	Insert with Terminals
Color:	Beige
Material:	PA66 HS IM

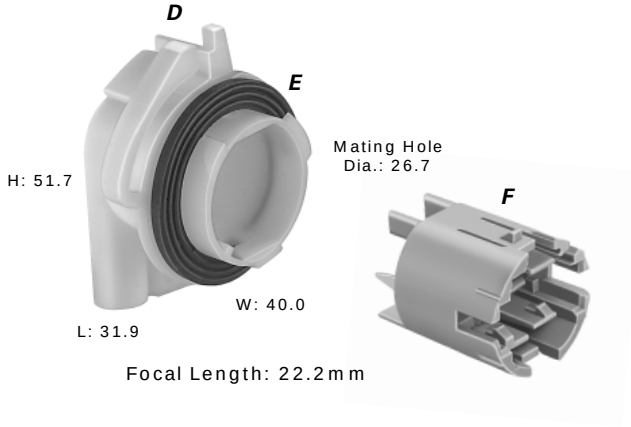

Focal Length: 22.2mm

G. Part No: 12160395

Description:	W-3 Right Angle Wedge Base
Size:	26.7 Hole Dia. x 31.9L x 51.7H x 40.0W
Color:	Md. Gray
Material:	PA66 HS IM
Terminals:	See A, Page 6.3
Seals:	280 Metri-Pack Cable Seals
Typical Lamp:	#3057

H. Part No: 12129909*

Description:	Seal
Color:	Black
Material:	EPDM

J. Part No: 12177163

Description:	Insert
Color:	Beige
Material:	PA66 HS IM

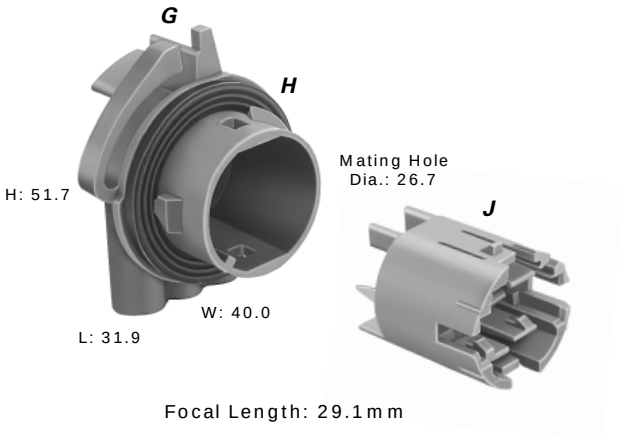

Focal Length: 29.1mm

* When an unsealed application is required, use gasket 12020720 in place of seal 12129909.

NOTE: Specifications in this catalog are for general reference only and are subject to change without notice. To verify product information, please contact a Delphi representative.

Peters de Laet
503-661-5088 – phone 503-661-5328 – fax
www.pdel.com

Lamp Sockets

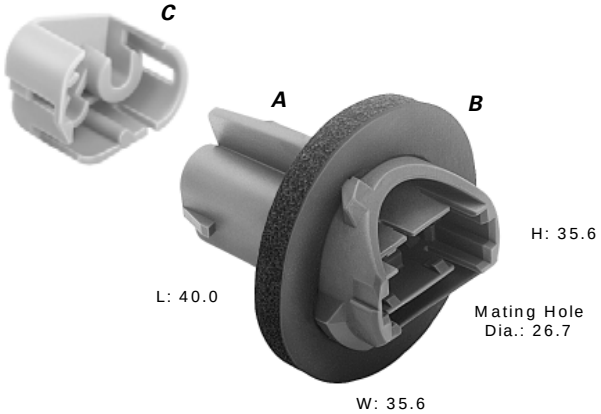

Focal Length: 29.1mm

A. Part No: 12191243

Description:	W-3 Axial Wedge Base
Size:	26.7 Hole Dia. x 40.0L x 35.6H x 35.6W
Color:	Dk. Gray
Material:	PA66 HS IM 14% GF
Terminals:	See E, Page 6.3 (2 Contacts, 1 Ground)
Seals:	280 and 630 Metri-Pack Cable Seals
Typical Lamp:	#3057

B. Part No: 12129909*

Description:	Seal
Color:	Black
Material:	EPDM

C. Part No: 15305473

Description:	TPA
Color:	Lt. Gray
Material:	PA66 HS IM

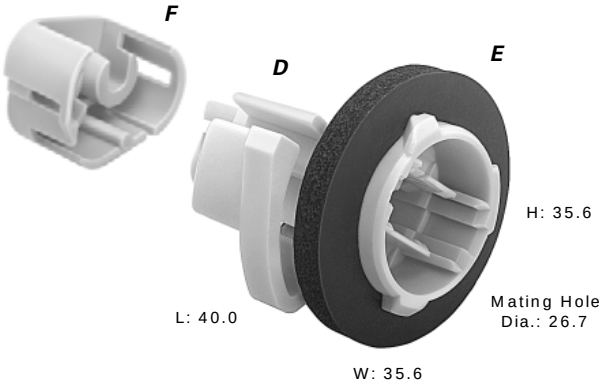

Focal Length: 22.2mm

D. Part No: 15435155 (Gray)
15485094 (Black)

Description:	W-3 Axial Wedge Base
Size:	26.7 Hole Dia. x 40.0L x 35.6H x 35.6W
Material:	PA66 HS IM 14% GF
Terminals:	See E, Page 6.3 (2 Contacts, 1 Ground)
Seals:	280 and 630 Metri-Pack Cable Seals
Typical Lamp:	#3057

E. Part No: 12129909*

Description:	Seal
Color:	Black
Material:	EPDM

F. Part No: 15305473

Description:	TPA
Color:	Lt. Gray
Material:	PA66 HS IM

* When an unsealed application is required, use gasket 12020720 (pictured) in place of seal 12129909.

NOTE: Specifications in this catalog are for general reference only and are subject to change without notice. To verify product information, please contact a Delphi representative.

Peters de Laet
503-661-5088 – phone 503-661-5328 – fax
www.pdel.com

Lamp Sockets

A. Part No: 12162223 (Clear)
12162222 (White)

Description:	W-2 Axial Wedge Base
Size:	10.4 Hole Dia. x 53.0L x 18.0H x 32.6W
Material:	PC
Terminals:	See B, Page 6.3
Typical Lamp:	#194

B. Part No: 12052490

Description:	TPA
Color:	Black
Material:	PA6

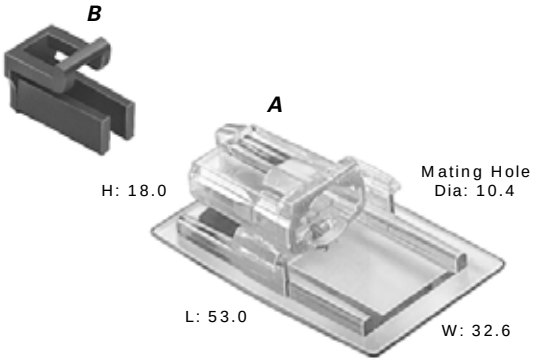

C. Part No: 12059952

Description:	W-2 Axial Wedge Base
Size:	15.7 Hole Dia. x 27.0L x 24.6H x 24.6W
Color:	Black
Material:	PA66 HS IM
Terminals:	See B, Page 6.3
Typical Lamp:	#194

D. Part No: 15324722

Description:	TPA
Color:	Red
Material:	PBT HS IM

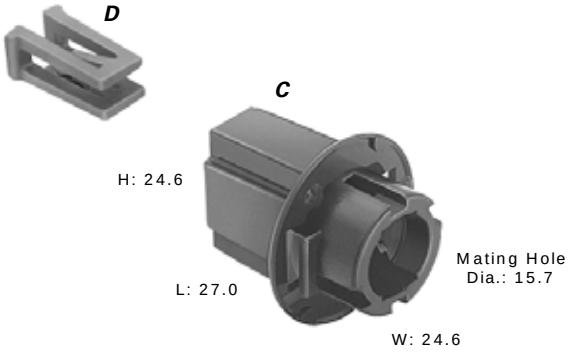

NOTE: Specifications in this catalog are for general reference only and are subject to change without notice. To verify product information, please contact a Delphi representative.

Peters de Laet
503-661-5088 – phone 503-661-5328 – fax
www.pdel.com

Lamp Sockets

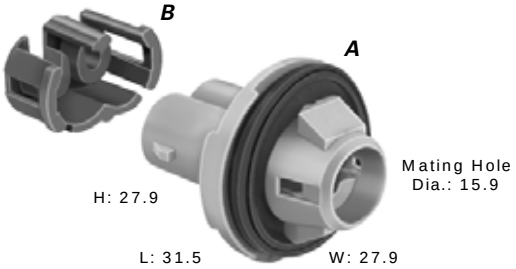

Focal Length: 15.5mm

A. Part No: 15324946*

Description:	W-2 Axial Wedge Base
Size:	15.9 Hole Dia. x 31.5L x 27.9H x 27.9W
Color:	Dk. Gray
Material:	PA66 HS IM 14% GF
Terminals:	See D, Page 6.3
Seals:	480 Metri-Pack Cable Seals
Typical Lamp:	#168 or #912

B. Part No: 12110054

Description:	TPA
Color:	Black
Material:	PA66 HS IM

*12146398 seal part of 15324946 assembly

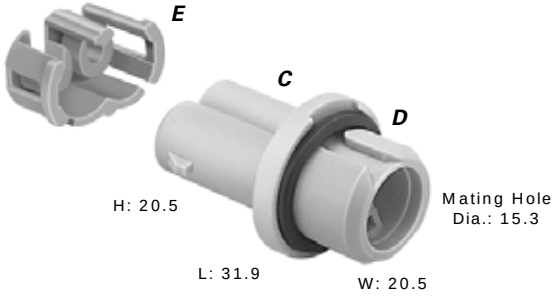

Focal Length: 15.5mm

C. Part No: 15317651

Description:	W-2 Axial Wedge Base
Size:	15.3 Hole Dia. x 31.9L x 20.5H x 20.5W
Color:	Lt. Gray
Material:	PA66 HS 33% GF
Terminals:	See C, Page 6.3
Seals:	280 Metri-Pack Cable Seals
Typical Lamp:	#194

D. Part No: 15317652

Description:	O-Ring
Color:	Black
Material:	EPDM

E. Part No: 12191522

Description:	TPA
Color:	Blue
Material:	PA66 HS IM

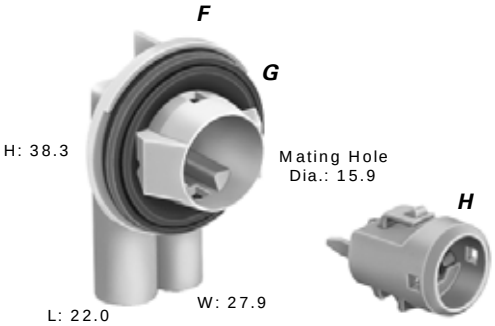

Focal Length: 15.5mm

F. Part No: 12146418

Description:	W-2 Right Angle Wedge Base
Size:	15.9 Hole Dia. x 22.0L x 38.3H x 27.9W
Color:	Lt. Gray
Material:	PA66 HS IM
Terminals:	See A, Page 6.3
Seals:	280 Metri-Pack Cable Seals
Typical Lamp:	#168

G. Part No: 12146398

Description:	Seal
Color:	Black
Material:	Santoprene

H. Part No: 15324428

Description:	Insert
Color:	Lt. Gray
Material:	PA66

NOTE: Specifications in this catalog are for general reference only and are subject to change without notice. To verify product information, please contact a Delphi representative.

Peters de Laet
503-661-5088 – phone 503-661-5328 – fax
www.pdel.com

Lamp Sockets

A. Part No: 12160386

Description:	B-1 Right Angle Bayonet Base
Size:	26.8 Hole Dia. x 27.2L x 62.6H x 41.1W
Color:	Lt. Gray
Material:	PA66 HS IM
Terminals:	See F, Page 6.3 (1 Contact, 1 Ground)
Seals:	280 Metri-Pack Cable Seals
Typical Lamp:	#1156

B. Part No: 12129909*

Description:	Seal
Color:	Black
Material:	EPDM

C. Part No: 12129057

Description:	TPA
Color:	Blue
Material:	PA66 HS IM

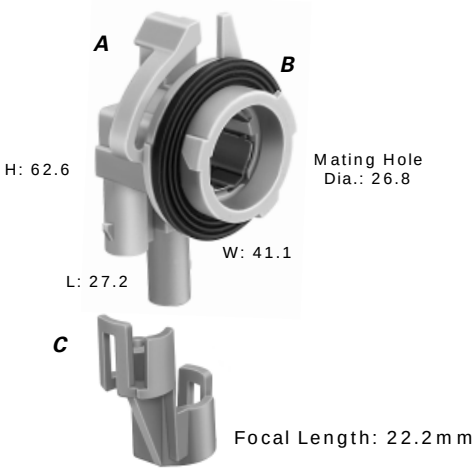

D. Part No: 12160390

Description:	C-2 Right Angle Bayonet Base
Size:	26.8 Hole Dia. x 27.2L x 62.6H x 41.1W
Color:	Cream
Material:	PA66 HS IM
Terminals:	See F, Page 6.3 (2 Contacts, 1 Ground)
Seals:	280 Metri-Pack Cable Seals
Typical Lamp:	#2057

E. Part No: 12129909*

Description:	Seal
Color:	Black
Material:	EPDM

F. Part No: 12129051

Description:	TPA
Color:	Blue
Material:	PA66 HS IM

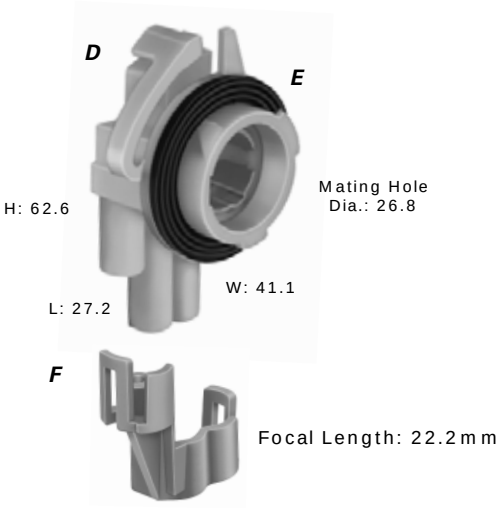

G. Part No: 12160392

Description:	C-2 Right Angle Bayonet Base
Size:	26.8 Hole Dia. x 21.6L x 62.6H x 41.1W
Color:	Md. Gray
Material:	PA66 HS IM
Terminals:	See F, Page 6.3 (2 Contacts, 1 Ground)
Seals:	280 Metri-Pack Cable Seals
Typical Lamp:	#2057

H. Part No: 12129909*

Description:	Seal
Color:	Black
Material:	EPDM

J. Part No: 12129051

Description:	TPA
Color:	Blue
Material:	PA66 HS IM

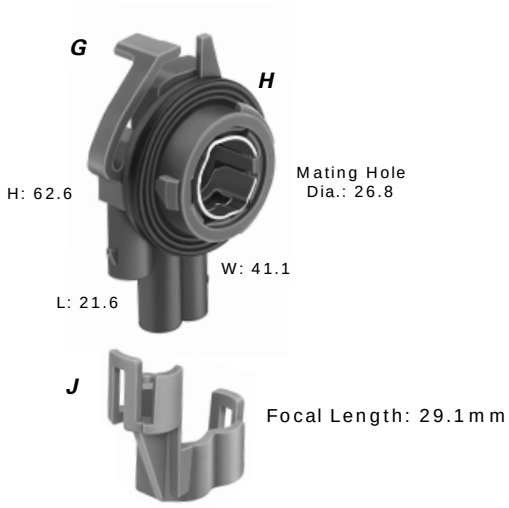

* When an unsealed application is required, use gasket 12020720 in place of seal 12129909.

NOTE: Specifications in this catalog are for general reference only and are subject to change without notice. To verify product information, please contact a Delphi representative.

Peters de Laet
503-661-5088 – phone 503-661-5328 – fax
www.pdel.com

Peters de Laet
503-661-5088 – phone 503-667-5328 – fax
www.pdel.com

Splice Savers

Unsealed System Application Information

GT 150 Series Terminals – Tin Plated

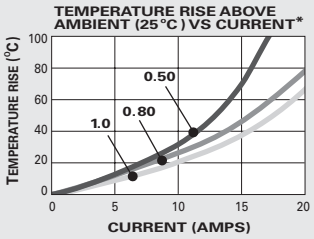

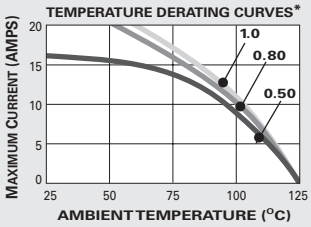

CABLE RANGE (mm²): 0.35-1.0
CURRENT RANGE (AMPS): 0-15
TEMP RANGE °C: ..... -40 to 125
RESISTANCE: ..... <10mΩ@20mV

VOLTAGE DROP: ... <10.0mV/amp
CENTERLINE SPACING (mm): 3.4
BLADE WIDTH (mm): 1.5

280 Series Terminals – Tin Plated

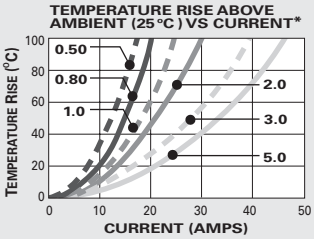

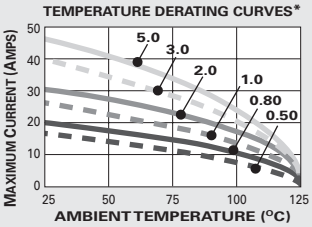

CABLE RANGE (mm²): 0.35-5.0
CURRENT RANGE (AMPS): 0-30
TEMP RANGE °C: ..... -40 to 125
RESISTANCE: ..... <10mΩ@20mV

VOLTAGE DROP: ..... <5.0mV/amp
CENTERLINE SPACING (mm): .5.0/6.3
BLADE WIDTH (mm): 2.8

*The test data are based on single circuits in free space and were generated using a "Lumped Resistance" model. This model does not account for all of the variables that would be present in an actual application. For actual product performance, contact your regional support representative.

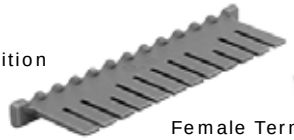

TPA
(Terminal Position
Assurance)

Female Terminal

Female Connector

Cap Assembly

TANGLESS

GT 150 Female Terminals Unsealed

Part #	Cable Range (mm2)	Material	Plating
12191811	0.50 - 0.35	Tin Brass	Tin
12191812	1.0 - 0.75	Tin Brass	Tin

280 M/P Tangless Female Terminals Unsealed

Part #	Cable Range (mm2)	Material	Plating
12110842	3.0 - 2.0	Tin Brass	Tin
12110844	1.0 - 0.80	Tin Brass	Tin
12110843	0.50 - 0.35	Tin Brass	Tin
12129061	2.0-0.35	Tin Brass	Tin

Splice Saver Connections Unsealed

Cavity Description	Part #	Color	Material	TPA	Cap Assembly	Splice Configuration
12Way GT 150	12191216	Lt. Gray	PA66 HS IM	12176462	12191217	1-12 Way
12Way GT 150	12176460	Black	PA66 HS IM	12176462	12176469	2-6 Ways
12Way 280 Metri-Pack Lg. Cavity	12176473	Black	PA66 HS IM	12176475	12176478	4-3 Ways
12Way 280 Metri-Pack	15305288	Black	PA66 HS IM	12176513	15305289	2-6 Ways
12Way 280 Metri-Pack	15305291	Black	PA66 HS IM	12176513	15305292	1-12 Way
12Way 280 Metri-Pack	15305294	Black	PA66 HS IM	12176513	15305295 w/M6 Hole	1-12 Way
12Way 280 Metri-Pack	15305294	Black	PA66 HS IM	12176513	15492655 w/M6 Bolt	1-12 Way
12Way 280 Metri-Pack	15305294	Black	PA66 HS IM	12176513	15354635 w/M6 Bolt & Retainer	1-12 Way
12Way 280 Metri-Pack	15305297	Black	PA66 HS IM	12176513	15305298 w/M10 Hole	1-12 Way

NOTE: Specifications in this catalog are for general reference only and are subject to change without notice. To verify product information, please contact a Delphi representative.

Peters de Laet
503-661-5088 – phone 503-661-5328 – fax
www.pdel.com

Splice Savers

Splice Saver connectors are capable of providing one or several splices within a single connection assembly. Splicing is accomplished within the male cap assembly using a segmented bus blade.

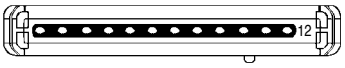

12191217 Cap Assembly 1-12M
Mates to Connector
12191216

12176469 Cap Assembly 2-6M
Mates to Connector
12176460

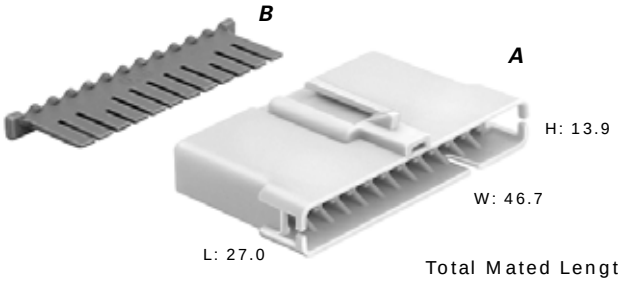

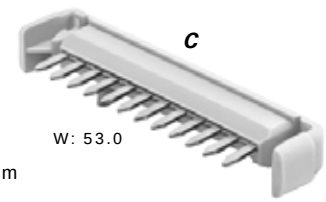

Total Mated Length: 30.6mm

A. Part No: 12191216 (Lt. Gray)
12176460 (Black)

Description:	Connector GT 150 12F
Size:	27.0L x 13.9H x 46.7W
Material:	PA66 HS IM
Terminals:	See Page 6.10, GT 150

B. Part No: 12176462

Description:	TPA
Color:	Md. Gray
Material:	PA66 HS IM

C. Part No: 12191217
(Md. Gray, 1-12M)
12176469
(Lt. Gray, 2-6M)

Description:	Cap Assembly
Size:	15.0L x 7.8H x 53.0W
Material:	PA66 HS IM

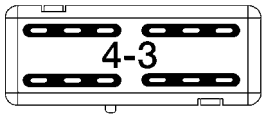

12176478 Cap Assembly 4-3M
Mates to Connector
12176473

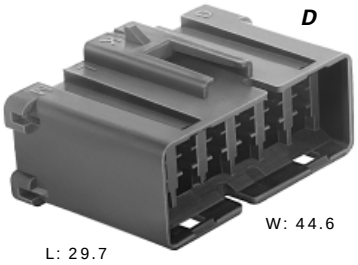

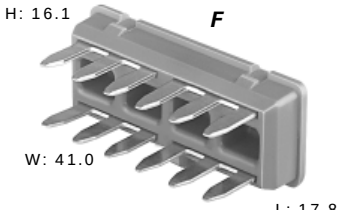

TANGLESS

Total Mated Length: 34.0mm

D. Part No: 12176473

Description:	Connector Metri-Pack 280 12F (Large Cavity)
Size:	29.7L x 19.6H x 44.6W
Color:	Black
Material:	PA66 HS IM
Terminals:	See Page 6.10, 280 Metri-Pack Tangless

E. Part No: 12176475

Description:	TPA
Color:	Gray
Material:	PA66 HS IM

F. Part No: 12176478

Description:	Cap Assembly 4-3M
Size:	17.8L x 16.1H x 41.0W
Color:	Brown
Material:	PA66 HS IM

NOTE: Specifications in this catalog are for general reference only and are subject to change without notice. To verify product information, please contact a Delphi representative.

Peters de Laet
503-661-5088 – phone 503-661-5328 – fax
www.pdel.com

Splice Savers

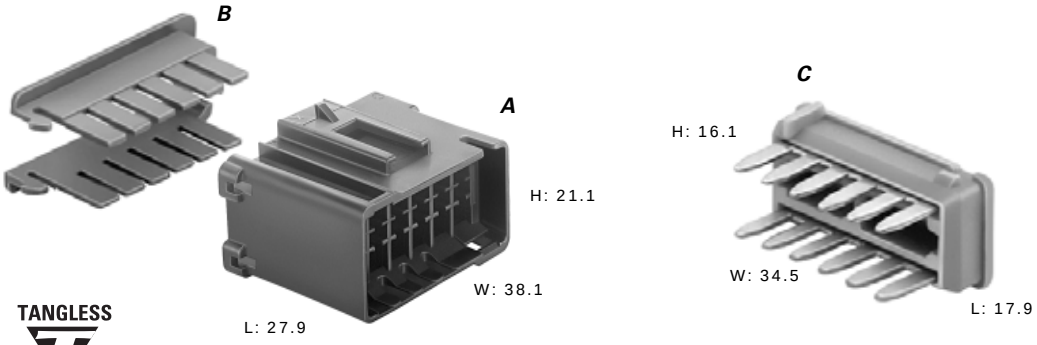

TANGLESS

Total Mated Length: 34.0mm

A. Part No: 15305288
15305291

Description:	Connector 280 Metri-Pack 12F
Size:	27.9L x 21.1H x 38.1W
Color:	Black
Material:	PA66 HS IM
Terminals:	See Page 6.10, 280 Metri-Pack Tangless

B. Part No: 12176513

Description:	TPA
Color:	Md. Gray
Material:	PA66 HS IM

C. Part No: 15305289
(Lt. Green, 2-6M)
15305292
(Cream, 1-12M)

Description:	Cap Assembly
Size:	17.9L x 16.1H x 34.5W
Material:	PA66 HS IM

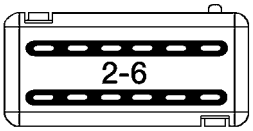

15305289 Cap Assembly 2-6M Mates to Connector 15305288

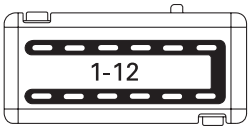

15305292 Cap Assembly 1-12M Mates to Connector 15305291

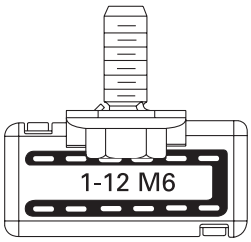

15492655 Cap Assembly 1-12M with Bolt Mates to Connector 15305294

15354635 Cap Assembly 1-12M with Bolt/Retainer Mates to Connector 15305294

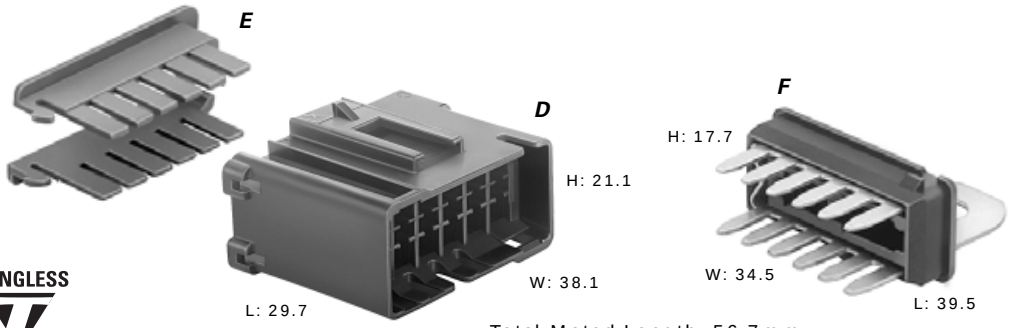

TANGLESS

Total Mated Length: 56.7mm

D. Part No: 15305294
15305297

Description:	Connector 280 Metri-Pack 12F
Size:	29.7L x 21.1H x 38.1W
Color:	Black
Material:	PA66 HS IM
Terminals:	See Page 6.10, 280 Metri-Pack Tangless

E. Part No: 12176513

Description:	TPA
Color:	Md. Gray
Material:	PA66 HS IM

F. Part No: 15492655
(Black, M6 Bolt Included)
15305295
(Black, M6 Hole)
15354635
(Black, M6 Bolt and Retainer Included)
15305298
(Beige, M10 Hole)

Description:	Cap Assembly 1-12M
Size:	39.5L x 17.7H x 34.5W
Material:	PA66 HS IM

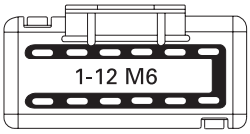

15305295 Cap Assembly 1-12M Mates to Connector 15305294

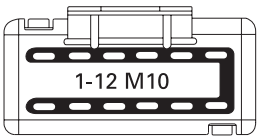

15305298 Cap Assembly 1-12M Mates to Connector 15305297

NOTE: Specifications in this catalog are for general reference only and are subject to change without notice. To verify product information, please contact a Delphi representative.

Peters de Laet
503-661-5088 – phone 503-661-5328 – fax
www.pdel.com

Splice Savers

Sealed System Application Information

GT 150 Series Terminals – Tin Plated

CABLE RANGE (mm²): 0.35-1.0

CURRENT RANGE (AMPS): 0-15

TEMP RANGE °C: ..... -40 to 125

RESISTANCE: ..... <10mΩ@20mV

VOLTAGE DROP: .... <10.0mV/amp

CENTERLINE SPACING (mm): 4.5

BLADE WIDTH (mm): 1.5

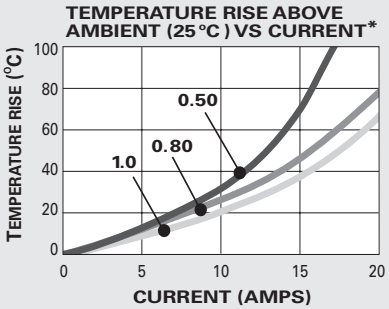

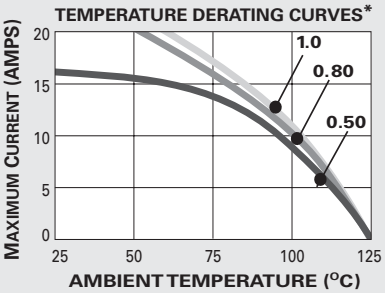

*The test data are based on single circuits in free space and were generated using a "Lumped Resistance" model. This model does not account for all of the variables that would be present in an actual application. For actual product performance, contact your regional support representative.

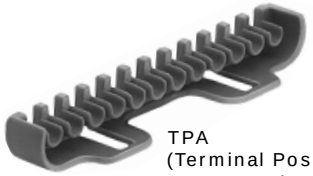

TPA (Terminal Position Assurance)

Cable Seal

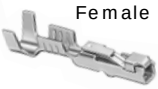

Female Terminal

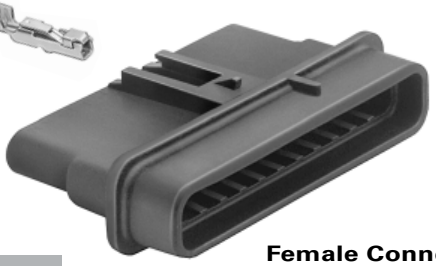

Female Connector

Cap Assembly

GT 150 Female Terminals Sealed

Part #	Cable Range (mm²)	Material	Plating
12191818	0.50 - 0.35	Tin Brass	Tin
12191819	1.0 - 0.75	Tin Brass	Tin

GT 150 Cable Seals

Reel Part #	Loose Part #	Cable Range (mm²)	Material	Color
12191152	15366021	1.20 - 1.90	Silicone	White
12191153	15366060	1.86 - 2.40	Silicone	Blue

GT 150 Cavity Plug*

Part #	Cavity Diameter	Material	Color
15305171	4.0 mm	Silicone	Green

*Cavity plugs seal unused female and male cavities.

Splice Saver Connections Sealed

Cavity Description	Part #	Color	Material	TPA	Cap Assembly	Splice Configuration
6Way GT 150	12191910	Black	PA66 HS IM 14% GF	12191911	12191914 w/Seal	1-6 Way
12Way GT 150	12191900	Black	PA66 HS IM14% GF	12191901	12191904 w/Seal	1-12 Way
12Way GT 150	12191905	Black	PA66 HS IM14% GF	12191901	12191908 w/Seal	3-4 Ways

NOTE: Specifications in this catalog are for general reference only and are subject to change without notice. To verify product information, please contact a Delphi representative.

Peters de Laet
503-661-5088 – phone 503-661-5328 – fax
www.pdel.com

Splice Savers

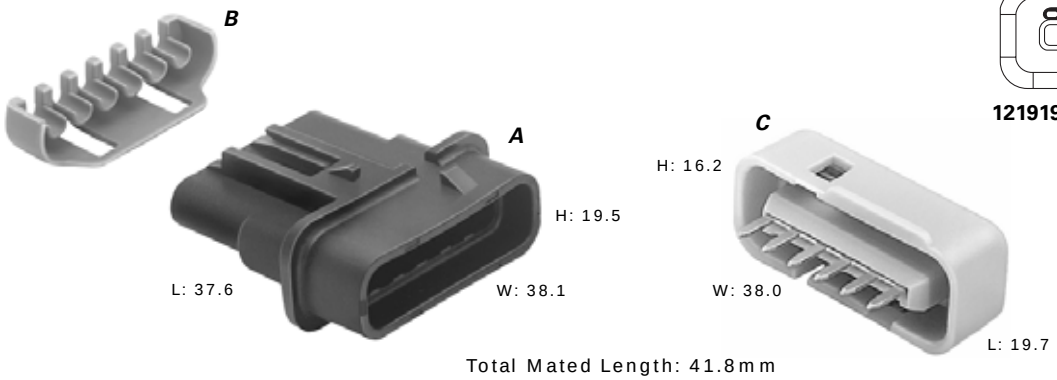

Total Mated Length: 41.8mm

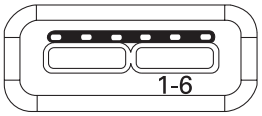

12191914 Cap Assembly 1-6M Mates to Connector 12191910

A. Part No: 12191910

Description:	Connector 150 GT 6F
Size:	37.6L x 19.5H x 38.1W
Color:	Black
Material:	PA66 HS IM 14% GF
Terminals:	See Page 6.13
Seals/Plugs:	See Page 6.13

C. Part No: 12191914

Description:	Cap Assembly 1-6M (w/Seal)
Size:	19.7L x 16.2H x 38.0W
Color:	Lt. Green
Material:	PA66 HS IM

B. Part No: 12191911

Description:	TPA
Color:	Md. Gray
Material:	PA66 HS IM

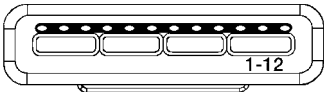

12191904 Cap Assembly 1-12M w/Seal Mates to Connector 12191900

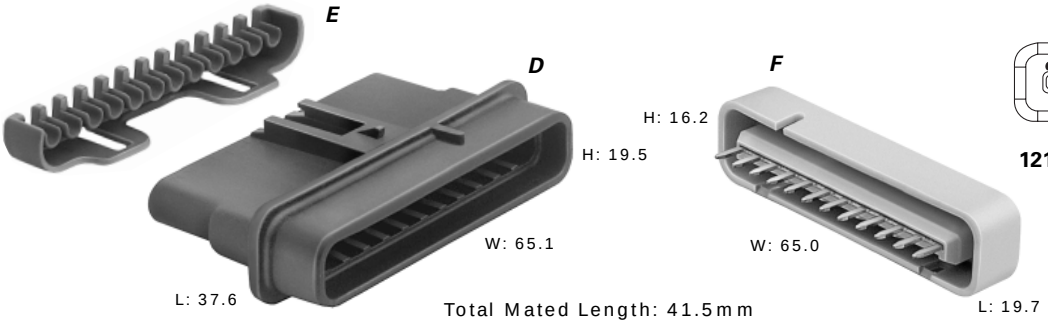

Total Mated Length: 41.5mm

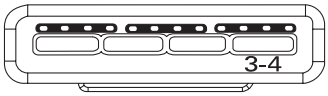

12191908 Cap Assembly 3-4M w/Seal Mates to Connector 12191905

D. Part No: 12191900 12191905

Description:	Connector 150 GT 12F
Size:	37.6L x 19.5H x 65.1W
Color:	Black
Material:	PA66 HS IM 14% GF
Terminals:	See Page 6.13
Seals/Plugs:	See Page 6.13

E. Part No: 12191901

Description:	TPA
Color:	Md. Gray
Material:	PA66 HS IM

F. Part No: 12191904 (Cream 1-12M w/Seal) 12191908 (Blue 3-4M w/Seal)

Description:	Cap Assembly
Size:	19.7L x 16.2H x 65.0W
Material:	PA66 HS IM

NOTE: Specifications in this catalog are for general reference only and are subject to change without notice. To verify product information, please contact a Delphi representative.

Peters de Laet
503-661-5088 – phone 503-661-5328 – fax
www.pdel.com

Peters de Laet
503-661-5088 – phone 503-661-5328 – fax
www.pdel.com

Weather-Pack

Cross Sectional View

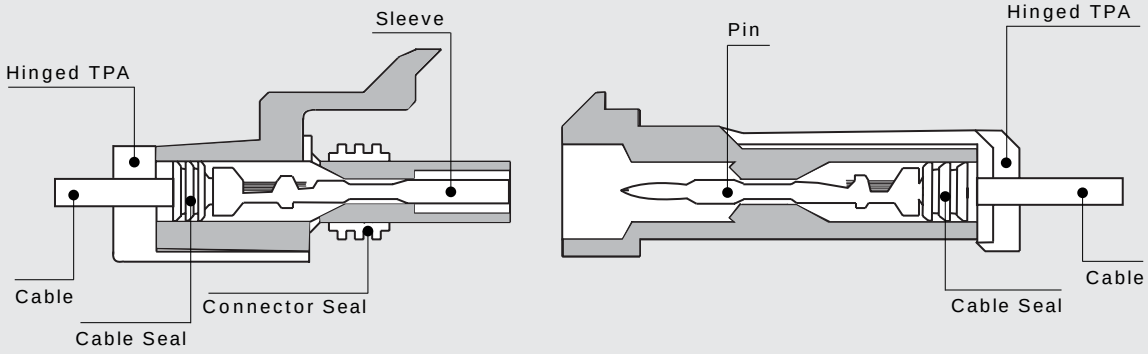

Female Connector Assembly **Male Connector**

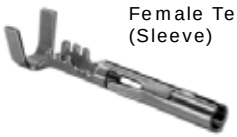

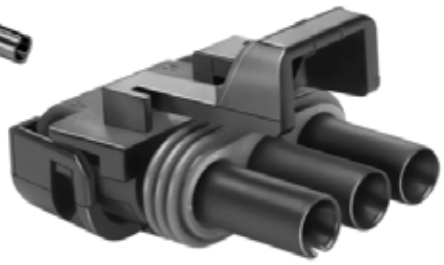

Female Connector Assembly

Weather-Pack Female Terminals (Sleeve) Sealed*

Sleeve Part #	Cable Range (mm²)	Material	Plating
12124581	3.0	Tin Brass	Tin
12124580	2.0-1.0	Tin Brass	Tin
12089188	0.80-0.50	Tin Brass	Tin
12020801	0.35	Tin Brass	Tin

* Use of the Weather-Pack 6060 gauge as a process control aid is recommended for Weather-Pack terminals. See page 10.5 in the Application Tooling section for details.

Weather-Pack Cable Seals

Reel Part #	Loose Part #	Cable Dia.	Material	Color
12015360	15324981	4.30-3.45	Silicone	Blue
12015359	15324980	3.49-2.81	Silicone	Gray
12015284	15324982	2.85-2.03	Silicone	Green
12041352	15324984	2.42-2.03	Silicone	Tan
12089444	15324985	2.15-1.60	Silicone	Purple
12034365	15324983	1.70-1.29	Silicone	Dk.Red

Weather-Pack Female Connector Assemblies Sealed

# Cavities	Connector Assembly	Color	Material
1	12015791	Black	PA6
2	12015792	Black	PA66 HS IM
3	12020829	Black	PA66 HS IM
4	12015798	Black	PA6
4	12020832	Black	PA66 HS IM
6	12020926	Black	PA66 HS IM
22	15492531	Black	PA6

NOTE: Specifications in this catalog are for general reference only and are subject to change without notice. To verify product information, please contact a Delphi representative.

Peters de Laet
503-661-5088 – phone 503-661-5328 – fax
www.pdel.com

Weather-Pack

Sealed System Application Information

Weather-Pack Terminals – Tin Plated

CABLE RANGE (mm²): 0.35-3.0

CURRENT RANGE (AMPS): 0-20

TEMP RANGE °C: ..... -40 to 125

RESISTANCE: ..... <10m @20mV

VOLTAGE DROP: ..... <3.0mV/amp

CENTERLINE SPACING (mm): 7.7

BLADE WIDTH (mm): ... Pin and Sleeve

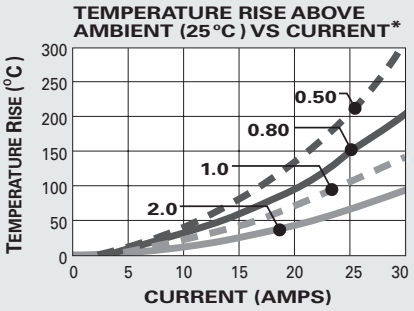

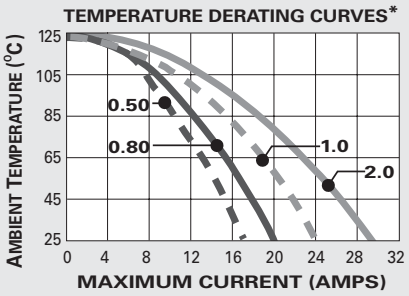

*The test data are based on single circuits in free space and were generated using a "Lumped Resistance" model. This model does not account for all of the variables that would be present in an actual application. For actual product performance, contact your regional support representative.

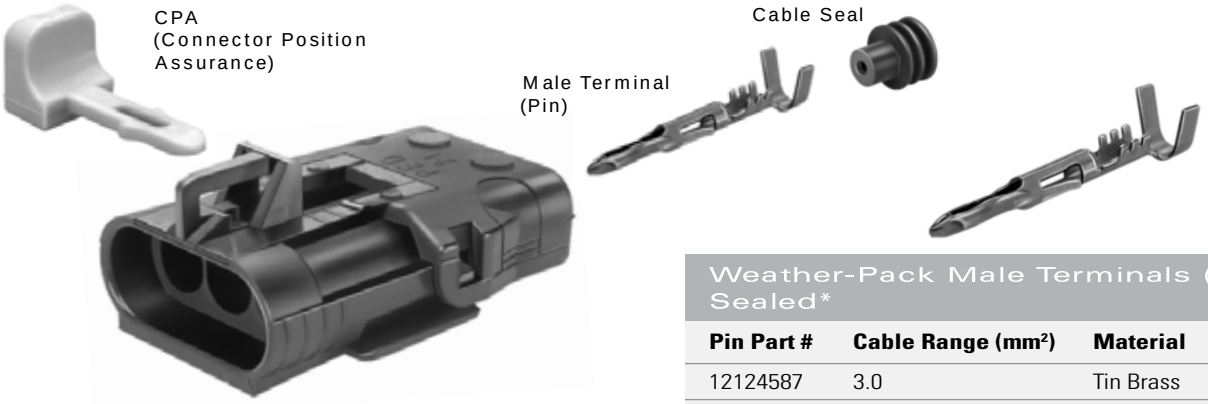

Male Connector

Weather-Pack Male Terminals (Pin) Sealed*

Pin Part #	Cable Range (mm²)	Material	Plating
12124587	3.0	Tin Brass	Tin
12124582	2.0-1.0	Tin Brass	Tin
12089040	0.80-0.50	Tin Brass	Tin
12089307	0.35-0.22	Tin Brass	Tin

*Use of the Weather-Pack 6060 gauge as a process control aid is recommended for Weather-Pack terminals. See page 10.5 in the Application Tooling section for details.

Weather-Pack Male Connectors Sealed

# Cavities	Connector	Color	Material
1	12010996	Black	PA66 HS IM
2	12010973	Black	PA6
3	12020827	Cream	PA66 HS IM
4	12015024	Black	PA6
4	12020830	Black	PA66 HS IM
6	12020786	Black	PA66 HS IM
22	15492521	Black	PA66 HS IM

Weather-Pack Cavity Plug*

Part #	Cavity Inside Dia.	Material	Color
12010300	6.7mm	Silicone	Green

*Cavity plugs seal unused female and male cavities.

SECTION NOTES:

- Due to rigid tolerances of connector cavities, it is critical to meet all crimp dimensions as specified.
- Different color and connector indexing features are also available.

NOTE: Specifications in this catalog are for general reference only and are subject to change without notice. To verify product information, please contact a Delphi representative.

Weather-Pack

An environmentally sealed connection system that utilizes triple-rib peripheral silicone rubber seals and individual towers to provide terminal isolation for connector alignment. Weather-Pack sealed systems are ideally suited for critical applications that require protection from environmental hazards.

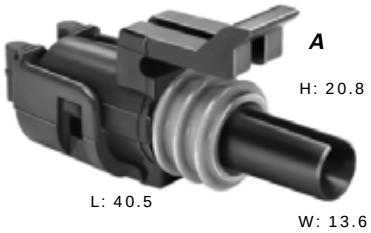

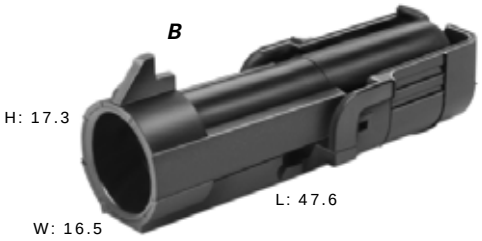

Total Mated Length: 64.5mm

A. Part No: 12015791

Description:	Connector Assembly 1F
Size:	40.5L x 20.8H x 13.6W
Color:	Black
Material:	PA6
Terminals:	See Page 6.16
Seals/Plugs:	See Page 6.16, 6.17

B. Part No: 12010996

Description:	Connector 1M
Size:	47.6L x 17.3H x 16.5W
Color:	Black
Material:	PA66 HS IM
Terminals:	See Page 6.17
Seals/Plugs:	See Page 6.16, 6.17

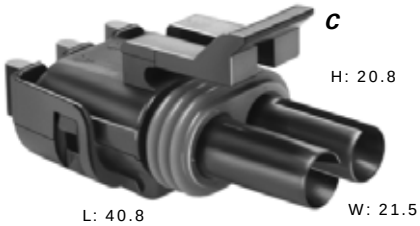

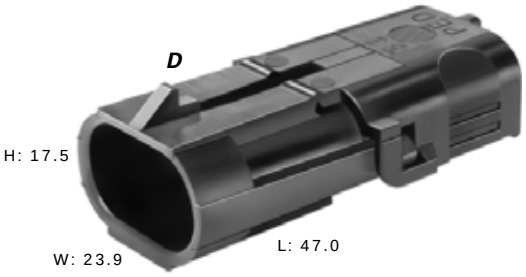

Total Mated Length: 68.3mm

C. Part No: 12015792 (Black)
PA66 HS IM
12103784 (Lt. Gray)
PA6

Description:	Connector Assembly 2F
Size:	40.8L x 20.8H x 21.5W
Terminals:	See Page 6.16
Seals/Plugs:	See Page 6.16, 6.17

D. Part No: 12010973 (Black)
PA6
12034074 (Md. Gray)
PA66 HS IM

Description:	Connector 2M (Clip Slot)
Size:	47.0L x 17.5H x 23.9W
Terminals:	See Page 6.17
Seals/Plugs:	See Page 6.16, 6.17

NOTE: Specifications in this catalog are for general reference only and are subject to change without notice. To verify product information, please contact a Delphi representative.

Peters de Laet
503-661-5088 – phone 503-661-5328 – fax
www.pdel.com

Weather-Pack

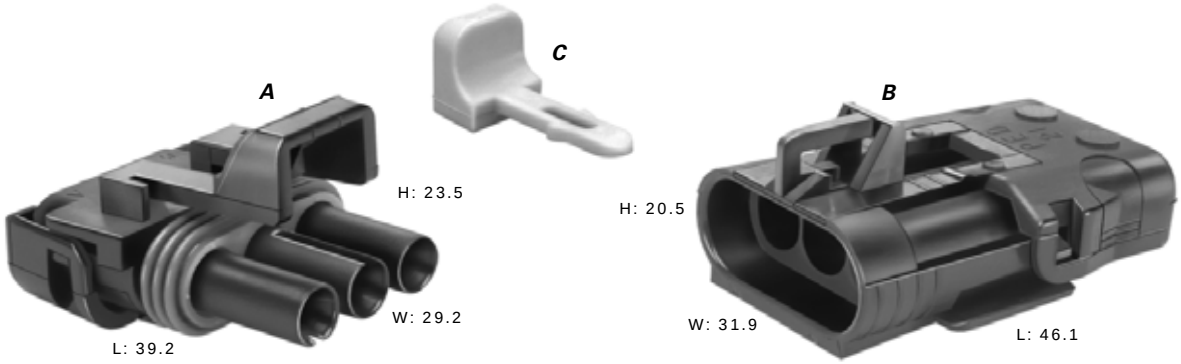

Total Mated Length: 65.8mm

A. Part No: 12020829

Description:	Connector Assembly 3F
Size:	39.2L x 23.5H x 29.2W
Color:	Black
Material:	PA66 HS IM
Terminals:	See Page 6.16
Seals/Plugs:	See Page 6.16, 6.17

B. Part No: 12020827

Description:	Connector 3M (Clip Slot)
Size:	46.1L x 20.5H x 31.9W
Color:	Cream
Material:	PA66 HS IM
Terminals:	See Page 6.17
Seals/Plugs:	See Page 6.16, 6.17

C. Part No: 12020833

Description:	CPA
Color:	Gray
Material:	PBT

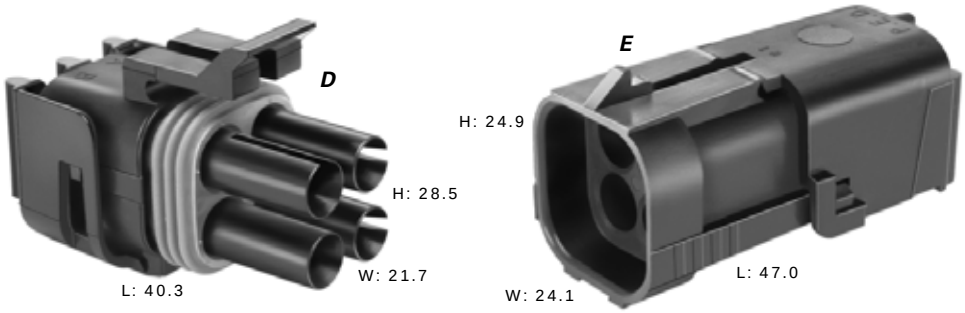

Total Mated Length: 68.3mm

D. Part No: 12015798

Description:	Connector Assembly 4F
Size:	40.3L x 28.5H x 21.7W
Color:	Black
Material:	PA6
Terminals:	See Page 6.16
Seals/Plugs:	See Page 6.16, 6.17

E. Part No: 12015024

Description:	Connector 4M (Clip Slot)
Size:	47.0L x 24.9H x 24.1W
Color:	Black
Material:	PA6
Terminals:	See Page 6.17
Seals/Plugs:	See Page 6.16, 6.17

NOTE: Specifications in this catalog are for general reference only and are subject to change without notice. To verify product information, please contact a Delphi representative.

Peters de Laet
503-661-5088 – phone 503-661-5328 – fax
www.pdel.com

Weather-Pack

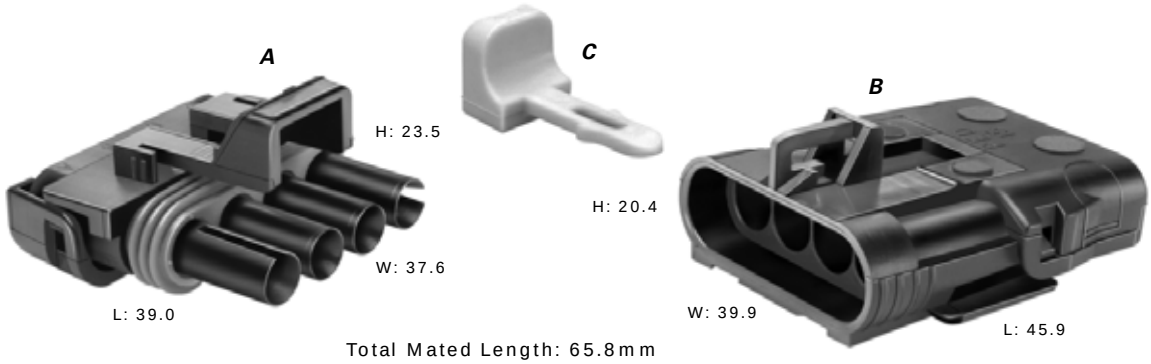

A. Part No: 12020832

Description:	Connector Assembly 4F
Size:	39.0L x 23.5H x 37.6W
Color:	Black
Material:	PA66 HS IM
Terminals:	See Page 6.16
Seals/Plugs:	See Page 6.16, 6.17

B. Part No: 12020830

Description:	Connector 4M (Clip Slot)
Size:	45.9L x 20.4H x 39.9W
Color:	Black
Material:	PA66 HS IM
Terminals:	See Page 6.17
Seals/Plugs:	See Page 6.16, 6.17

C. Part No: 12020833

Description:	CPA
Color:	Gray
Material:	PBT

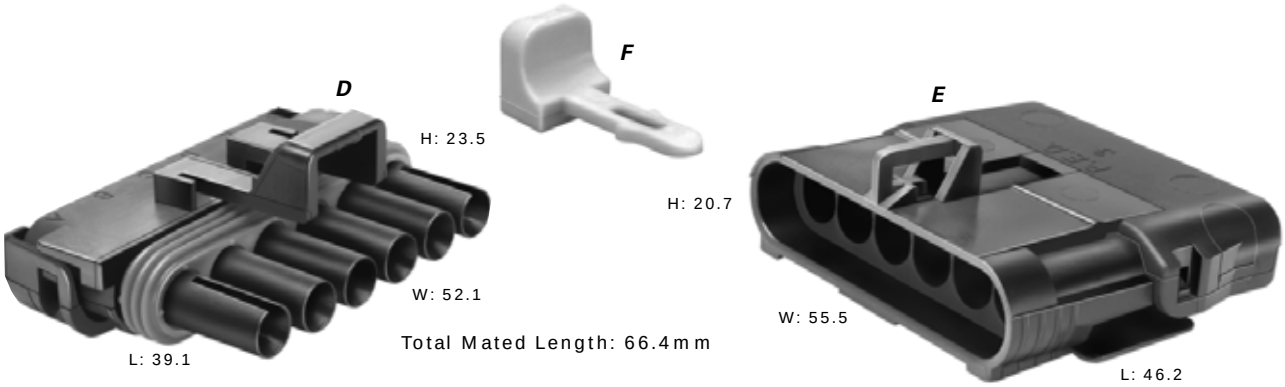

D. Part No: 12020926

Description:	Connector Assembly 6F
Size:	39.1L x 23.5H x 52.1W
Color:	Black
Material:	PA66 HS IM
Terminals:	See Page 6.16
Seals/Plugs:	See Page 6.16, 6.17

E. Part No: 12020786

Description:	Connector 6M (Clip Slot)
Size:	46.2L x 20.7H x 55.5W
Color:	Black
Material:	PA66 HS IM
Terminals:	See Page 6.17
Seals/Plugs:	See Page 6.16, 6.17

F. Part No: 12020833

Description:	CPA
Color:	Gray
Material:	PBT

NOTE: Specifications in this catalog are for general reference only and are subject to change without notice. To verify product information, please contact a Delphi representative.

Peters de Laet
503-661-5088 – phone 503-661-5328 – fax
www.pdel.com

Weather-Pack

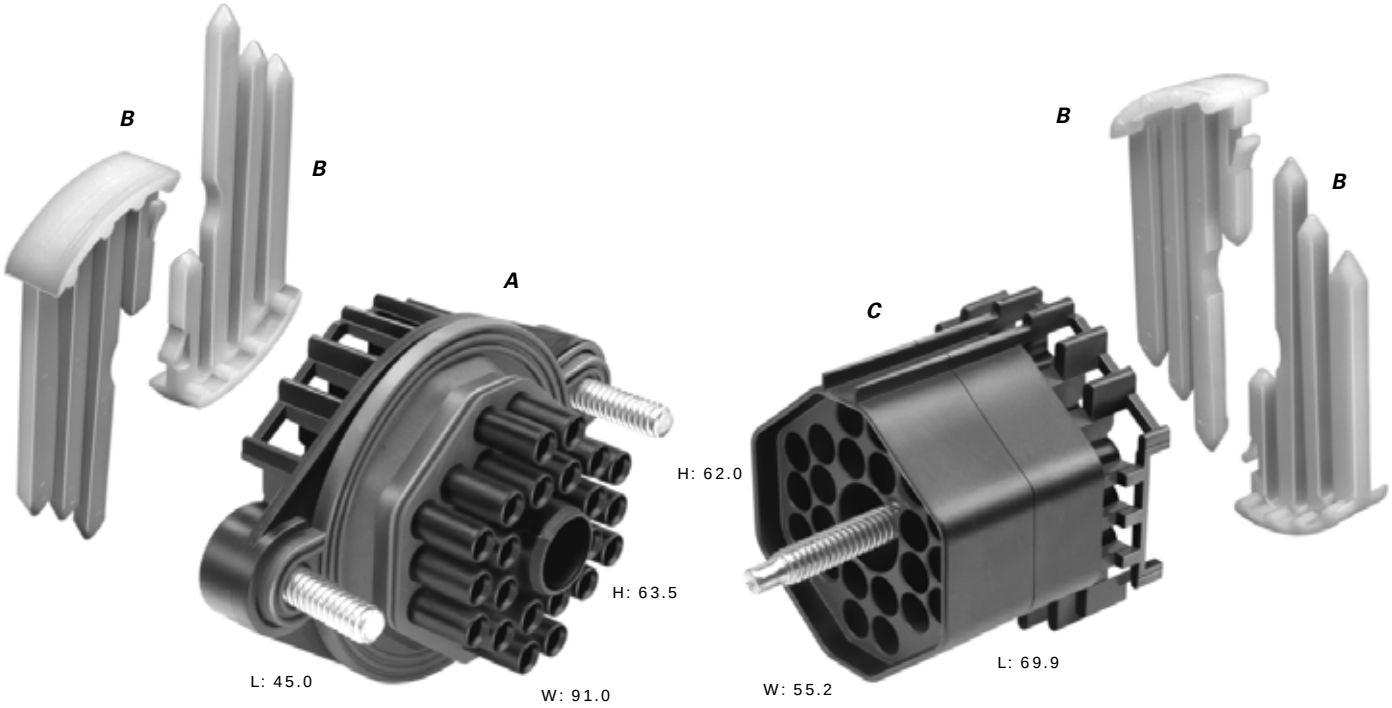

Total Mated Length: 77.3mm

A. Part No: 15492531

Description:	Connector Assembly 22F
Size:	45.0L x 63.5H x 91.0W
Color:	Black
Material:	PA6
Terminals:	See Page 6.16
Seals/Plugs:	See Page 6.16, 6.17
Application:	Pass-Through

B. Part No: 12010852

Description:	Secondary Lock
Number Req:	4
Color:	Natural
Material:	PA6

C. Part No: 15492521

Description:	Connector Assembly 22M
Size:	69.9L x 62.0H x 55.2W
Color:	Black
Material:	PA66 HS IM
Terminals:	See Page 6.17
Seals/Plugs:	See Page 6.16, 6.17
Application:	Pass-Through

NOTE: Specifications in this catalog are for general reference only and are subject to change without notice. To verify product information, please contact a Delphi representative.

Peters de Laet
503-661-5088 – phone 503-661-5328 – fax
www.pdel.com

VF Connections

Unsealed System Application Information

280 Series Terminals – Tin Plated

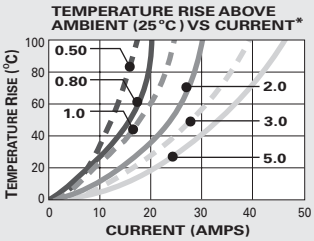

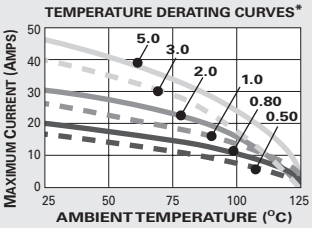

CABLE RANGE (mm²): 0.5-2.5
CURRENT RANGE (AMPS): 19
TEMP RANGE °C: ..... -40 to 125
RESISTANCE: ..... <10mΩ@20mV

VOLTAGE DROP: ..... <4.0mV/amp
CENTERLINE SPACING (mm): 5.0
BLADE WIDTH (mm): 2.8

630 Series Terminals – Tin Plated

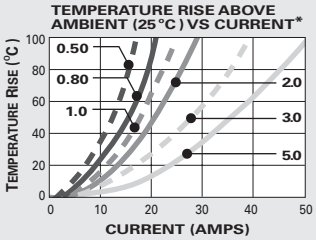

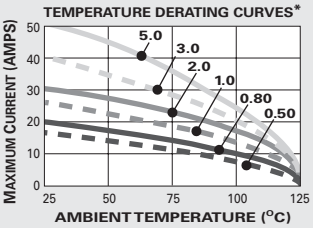

CABLE RANGE (mm²): 0.5-2.5
CURRENT RANGE (AMPS): 33
TEMP RANGE °C: ..... -40 to 135
RESISTANCE: ..... <10mΩ@20mV

VOLTAGE DROP: ..... <4.0mV/amp
CENTERLINE SPACING (mm): 8.0
BLADE WIDTH (mm): .....
..... 4.8 (6.3 ALSO POSSIBLE)

*The test data are based on single circuits in free space and were generated using a "Lumped Resistance" model. This model does not account for all of the variables that would be present in an actual application. For actual product performance, contact your regional support representative.

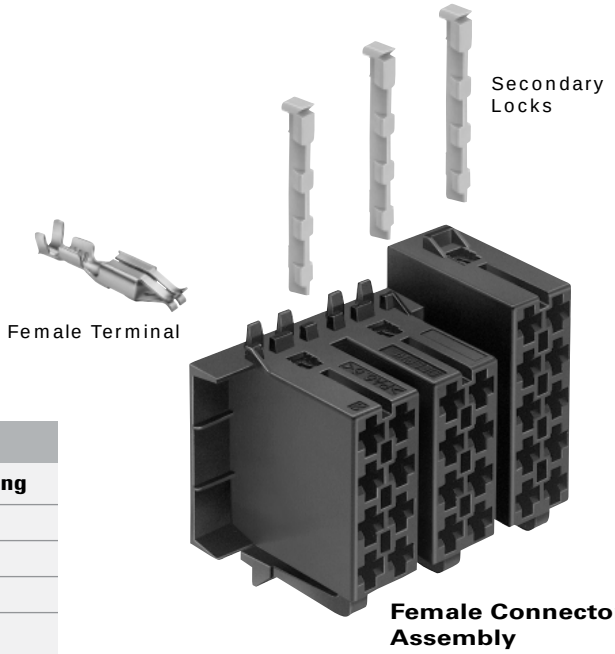

VF 280 Female Terminals Unsealed			
Part #	**Cable Range (mm²)**	**Material**	**Plating**
12157735	1.0-0.50	Brass	Tin
12197559	2.5-1.0	Brass	Tin
12198151	1.0-0.50	Bronze	Tin
12157736	2.5-1.0	Bronze	Tin

VF 630 Female Terminals Unsealed			
Part #	**Cable Range (mm²)**	**Material**	**Plating**
15327398	1.0-0.50	Bronze	Tin
15327399	1.0-0.50	STOL 76	Tin
15327400	2.5-1.0	STOL 76	Tin

VF Female Connector Assemblies Unsealed			
# Cavities	**Conn. Assembly**	**Color**	**Material**
9	12198409	Black	PA66 15% GF
12	15327221	Black	PA66 HS IM
16	15363852	Black	PA66
25	15363846	Yellow	PA66
26	15327416	Black	PA66

NOTE: Specifications in this catalog are for general reference only and are subject to change without notice. To verify product information, please contact a Delphi representative.

Peters de Laet
503-661-5088 – phone 503-661-5328 – fax
www.pdel.com

VF Connections

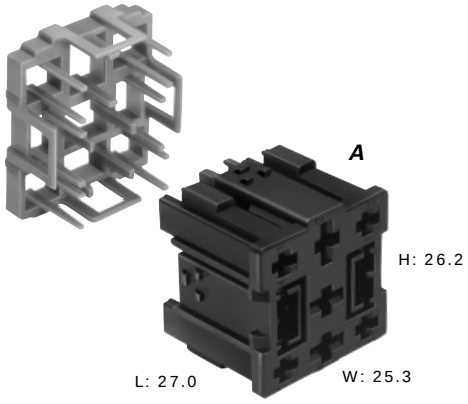

A. Part No: 12198409

Description:	Connector Assembly 9F
Size:	27.0L x 26.2H x 25.3W
Color:	Black
Material:	PA66 15% GF
Terminals:	See Page 6.22
Typical App:	Relay Base

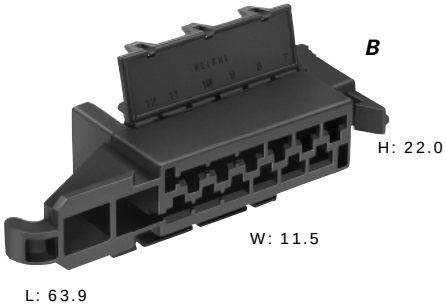

B. Part No: 15327221

Description:	Connector Assembly 12F
Size:	63.9L x 22.0H x 11.5W
Color:	Black
Material:	PA66 HS IM
Terminals:	See Page 6.22
Typical App:	Turn Lights

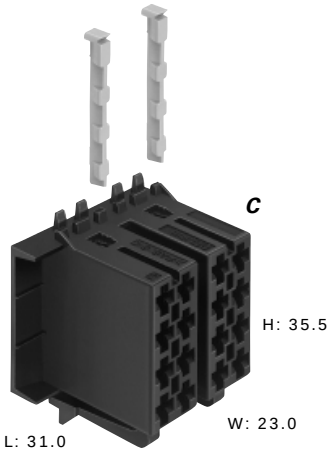

C. Part No: 15363852

Description:	Connector Assembly 16F
Size:	31.0L x 35.5H x 23.0W
Color:	Black
Material:	PA66
Terminals:	See Page 6.22
Typical App:	Radio

NOTE: Specifications in this catalog are for general reference only and are subject to change without notice. To verify product information, please contact a Delphi representative.

Peters de Laet
503-661-5088 – phone 503-661-5328 – fax
www.pdel.com

VF Connections

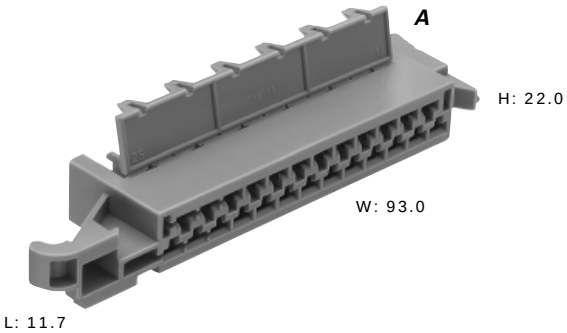

A. Part No: 15363846

Description:	Connector 25F
Size:	93.0L x 22.0H x 11.7W
Color:	Yellow
Material:	PA66
Terminals:	See Page 6.22
Typical App:	Alarm

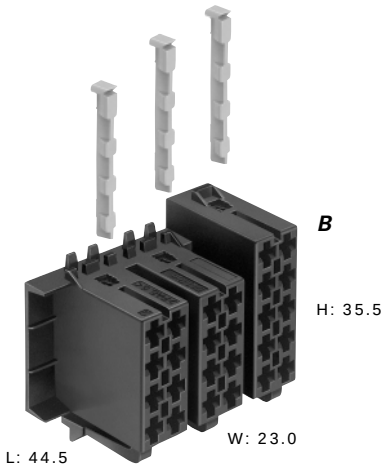

B. Part No: 15327416

Description:	Connector Assembly 26F
Size:	44.5L x 35.5H x 23.0W
Color:	Black
Material:	PA66
Terminals:	See Page 6.22
Typical App:	Radio

NOTE: Specifications in this catalog are for general reference only and are subject to change without notice. To verify product information, please contact a Delphi representative.

Peters de Laet
503-661-5088 – phone 503-661-5328 – fax
www.pdel.com

VF Device Connections

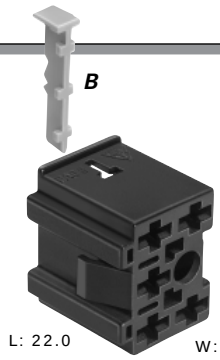

A. Part No: 15344630

Description:	Connector 5F
Size:	22.0L x 25.4H x 21.0W
Color:	Black
Material:	PA66
Terminals:	See Page 6.22
Typical App:	5-Way Switch

B. Part No: 12147500

Description:	Secondary Lock
Color:	Yellow
Material:	PA66 25% GF

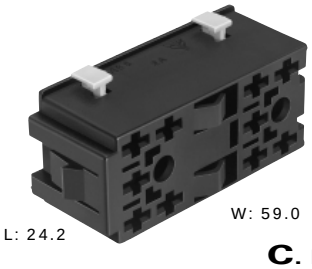

C. Part No: 12147496

Description:	Connector Assembly 10F
Size:	24.2L x 25.2H x 59.0W
Color:	Black
Material:	PA66
Terminals:	See Page 6.22
Typical App:	Double 5-Way Switch

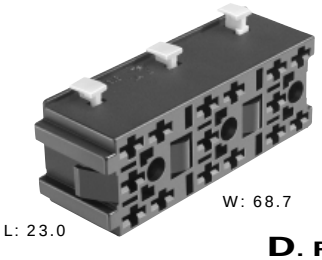

D. Part No: 12147497

Description:	Connector Assembly 15F
Size:	23.0L x 25.4H x 68.7W
Color:	Black
Material:	PA66
Terminals:	See Page 6.22
Typical App:	Triple 5-Way Switch

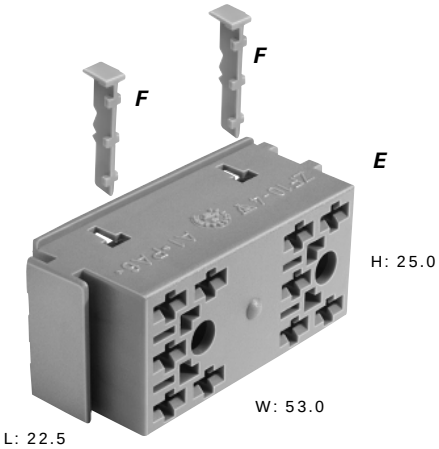

E. Part No: 12185521

Description:	Connector 10F
Size:	22.5L x 25.0H x 53.0W
Color:	Blue
Material:	PA6
Terminals:	See Page 6.22
Typical App:	Double 5-Way Switch

F. Part No: 12185243

Description:	Secondary Lock
Number Req:	2
Color:	Gray
Material:	PA6 15% GF

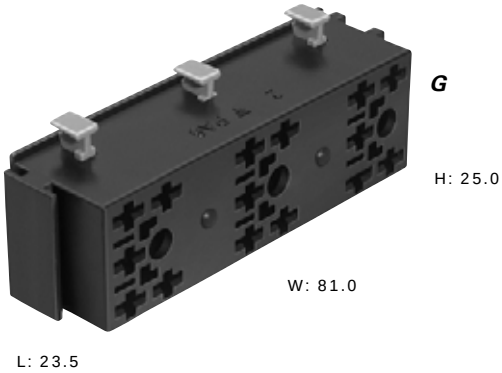

G. Part No: 10740413

Description:	Connector Assembly 15F
Size:	23.5L x 25.0H x 81.0W
Color:	Black
Material:	PA6
Terminals:	See Page 6.22
Typical App:	Triple 5-Way Switch

NOTE: Specifications in this catalog are for general reference only and are subject to change without notice. To verify product information, please contact a Delphi representative.

Peters de Laet
503-661-5088 – phone 503-661-5328 – fax
www.pdel.com

DS Connections

Sealed System Application Information

280 Series Terminals – Tin Plated

CABLE RANGE (mm²): 0.5-2.5

CURRENT RANGE (AMPS): 19

TEMP RANGE °C: ..... -40 to 125

RESISTANCE: ..... <10mΩ@20mV

VOLTAGE DROP: ..... <4.0mV/amp

CENTERLINE SPACING (mm): 5.0

BLADE WIDTH (mm): 2.8

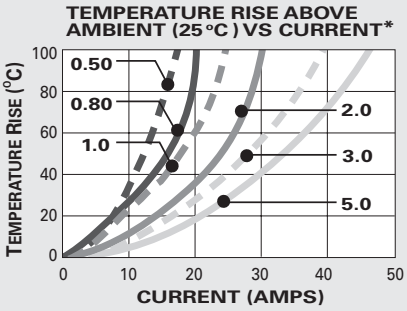

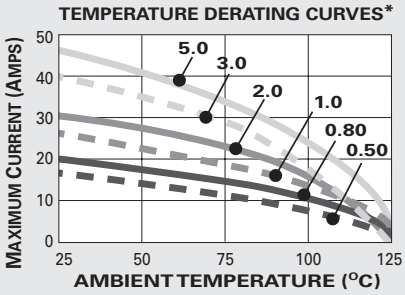

*The test data are based on single circuits in free space and were generated using a "Lumped Resistance" model. This model does not account for all of the variables that would be present in an actual application. For actual product performance, contact your regional support representative.

Cable Seal

Female Terminal

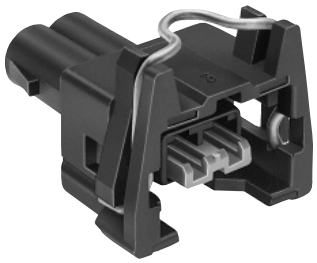

Female Connector Assembly

DS 280 Female Terminals Sealed

Part #	Cable Range (mm²)	Material	Plating
12157739	1.0-0.50	Bronze	Tin
12157740	2.5-1.0	Bronze	Tin
15327192	1.0-0.50	Bronze	Tin
12198103	2.5-1.0	Bronze	Tin

DS 280 Cable Seals

Reel Part #	Loose Part #	Cable Dia.	Material	Color
12015360	10720851	4.30-3.45	Silicone	Blue
12015359	15324980	3.49-2.81	Silicone	Gray
12015284	15324982	2.85-2.03	Silicone	Green
12041352	15324984	2.42-2.03	Silicone	Tan
12089444	15324985	2.15-1.60	Silicone	Purple
12034365	15324983	1.70-1.29	Silicone	Dk.Red

DS Female Connector Assemblies Sealed

# Cavities	Conn. Assembly	Color	Material
2	12196895	Black	PA66 30% GF
2	15364309	Black	PA66 30% GF
3	12158456	Black	PA66 30% GF
3	15364318	Yellow	PA66 30% GF
5	12158457	Black	PA66 30% GF

NOTE: Specifications in this catalog are for general reference only and are subject to change without notice. To verify product information, please contact a Delphi representative.

Peters de Laet
503-661-5088 – phone 503-661-5328 – fax
www.pdel.com

DS Connections

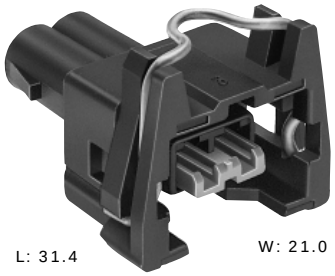

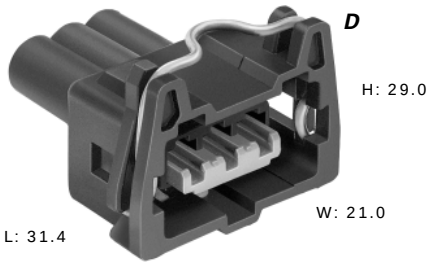

A. Part No: 12196895

Description:	Connector Assembly 2F
Size:	31.4L x 24.0H x 21.0W
Color:	Black
Material:	PA66 30% GF
Terminals:	See Page 6.26
Seals:	See Page 6.26
Typical App:	Injector

D. Part No: 12158456

Description:	Connector Assembly 3F
Size:	31.4L x 29.0H x 21.0W
Color:	Black
Material:	PA66 30% GF
Terminals:	See Page 6.26
Seals:	See Page 6.26
Typical App:	Fuel Pump

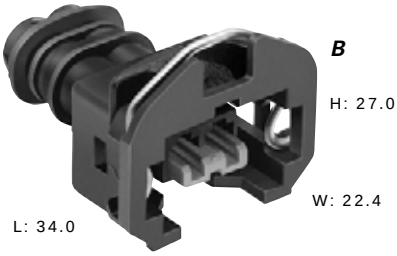

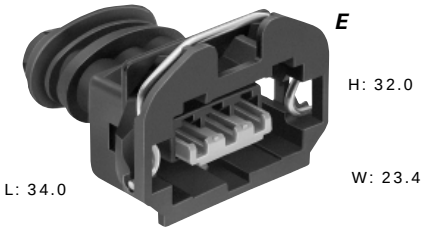

B. Part No: 15364309

Description:	Connector Assembly 2F
Size:	34.0L x 27.0H x 22.4W
Color:	Black
Material:	PA66 30% GF
Terminals:	See Page 6.26
Seals:	See Page 6.26
Typical App:	Injector

E. Part No: 15364318

Description:	Connector Assembly 3F
Size:	34.0L x 32.0H x 23.4W
Color:	Black
Material:	PA66 30% GF
Terminals:	See Page 6.26
Seals:	See Page 6.26
Typical App:	Fuel Pump

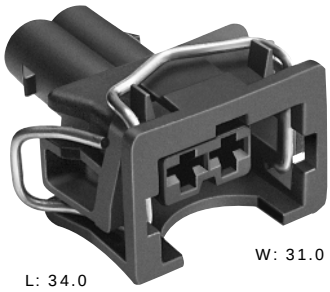

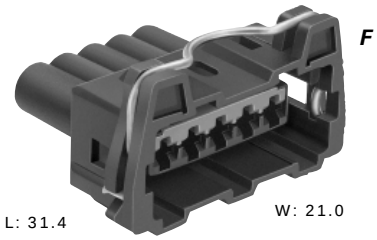

C. Part No: 12084126

Description:	Connector Assembly 2F
Size:	34.0L x 18.8H x 31.0W
Color:	Black
Material:	PA66 30% GF
Terminals:	See Page 6.26
Typical App:	Injector

F. Part No: 12158457

Description:	Connector Assembly 5F
Size:	31.4L x 39.0H x 21.0W
Color:	Black
Material:	PA66 30% GF
Terminals:	See Page 6.26
Seals:	See Page 6.26
Typical App:	Ignition System

NOTE: Specifications in this catalog are for general reference only and are subject to change without notice. To verify product information, please contact a Delphi representative.

Peters de Laet
503-661-5088 – phone 503-661-5328 – fax
www.pdel.com

Peters de Laet
503-661-5088 – phone 503-661-5328 – fax
www.pdel.com

Modular & Traditional

Delphi designs and manufactures various types of electrical centers to meet all unique customer requirements. Delphi's Electrical Centers can be custom designed or supplied from existing designs to meet your needs. Centers are available in Modular and Traditional style, and have the flexibility to accept both SAE and ISO approved device footprints.

Electrical Center Features

- Centralizes all circuit protection within a wiring system
- Accommodates Mini-Relay and Micro-Relays as well as MINI® Fuses and MAXI™ Fuses
- Modular Electrical Centers create a unique electrical center by combining appropriate modules into a standardized base

Modular

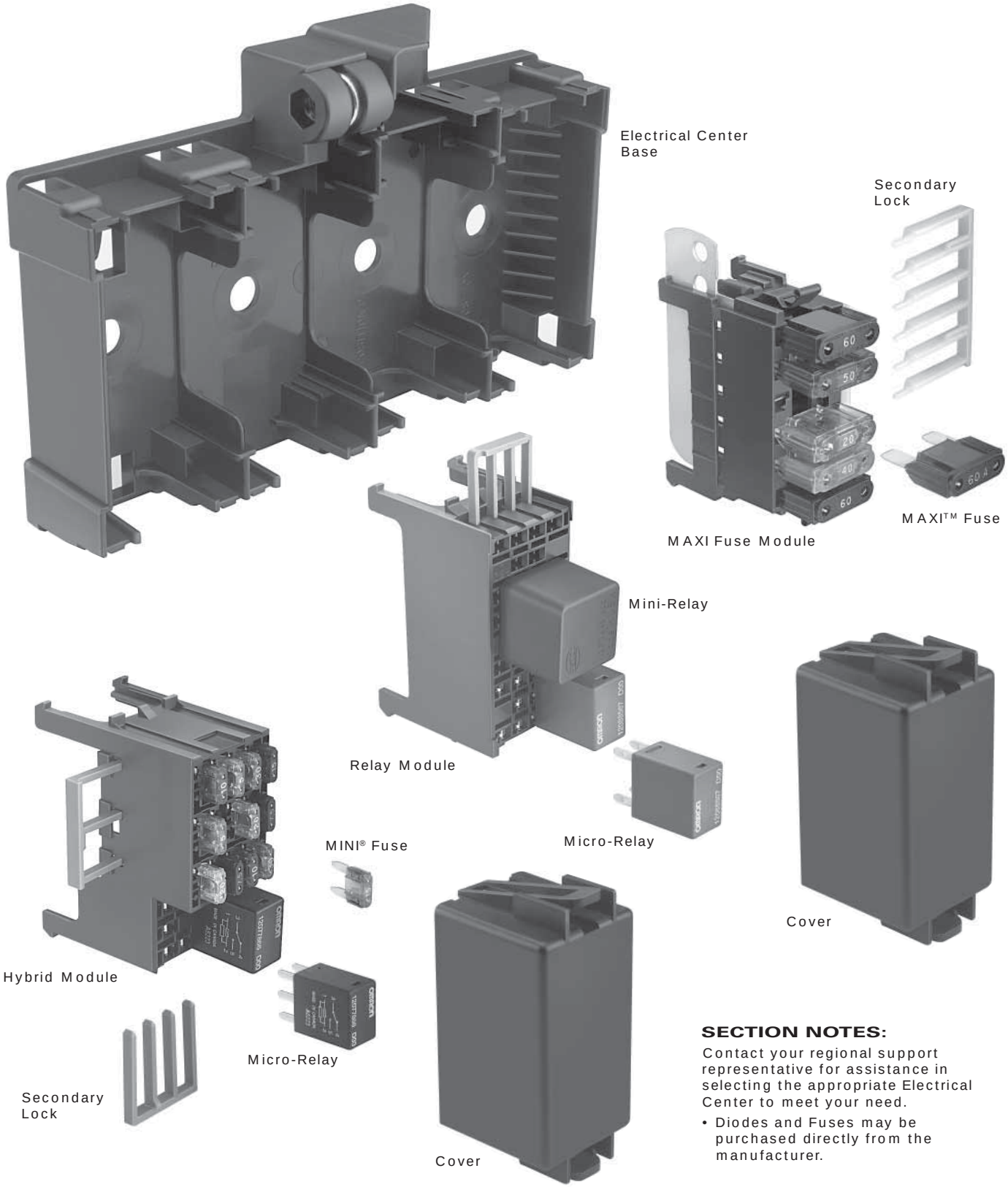

SECTION NOTES:

Contact your regional support representative for assistance in selecting the appropriate Electrical Center to meet your need.

- Diodes and Fuses may be purchased directly from the manufacturer.

NOTE: Specifications in this catalog are for general reference only and are subject to change without notice. To verify product information, please contact a Delphi representative.

Peters de Laet
503-661-5088 – phone 503-661-5328 – fax
www.pdel.com

Modular

MINI Fuse Module

Diode

MINI® Fuse

MINI® Fuse Modules

Part #	Application	Color	Material	Secondary Lock	Cover	Latch
12191544	20 MINI Fuses	Black	PA66 HS IM 14% GF	12146947	15324032	–
12177145	28 MINI Fuses	Black	PA66 HS IM 14% GF	12092507	12110043	15495959

MAXI™ Fuse Modules

Part #	Application	Color	Material	Secondary Lock	Cover	Latch
12110129	6 MAXI Fuses RT Battery Feed	Black	PA66 HS 33% GF	12077563	–	–
12077569	6 MAXI Fuses LT Battery Feed	Black	PA66 HS 33% GF	12077563	–	–
12092231	8 MAXI Fuses RT Battery Feed	Black	PA66 HS 33% GF	12077532	12077538	15495959
12092220	8 MAXI Fuses LT Battery Feed	Black	PA66 HS 33% GF	12077532	12077538	15495959

Cover

Relay Modules

Part #	Application	Color	Material	Secondary Lock	Cover	Latch
12077571	6 Micro-Relays	Black	PA66 HS IM	12077572	12160897	15495959
15423524	2 Mini-Relays	Black	PA66 HS IM	12033872	12160897	15495959
12146836	1 Mini/2 Micro-Relays	Black	PA66 HS IM	12146835	15324032	–

Hybrid Modules (Combination of Fuse and Relay Cavities)

Part #	Application	Color	Material	Secondary Lock	Cover	Latch
12160504	MINI Fuse, Mini-Relay, Micro-Relay	Black	PA66 HS IM 14% GF	12160541	12160897	15495959
12110594	6 MINI Fuses 4 Micro-Relays	Black	PA66 HS IM 14% GF	12110595	12110602	15495959
12146815	12 MINI Fuses, 1 Mini-Relay or 2 Micro-Relays	Black	PA66 HS IM 14% GF	12146816 12146817	15324032	–
12191848	MINI Fuse, MAXI Fuse, Mini-Relay, Micro-Relay	Black	PA66 HS IM 14% GF	12191849	15305152	15495959

Electrical Center Bases

Part #	Application	Color	Material
12084910	1 Module	Black	PA6
12092741	3 Modules	Black	PA6
12092328	3 Modules w/Battery Feed	Black	PA6
12129121	4 Modules w/Battery Feed	Black	PA6
12110041	4 Modules	Black	PA6
12191497	1 Module	Black	PA6
12077534	1 Module w/Battery Feed	Black	PA6

NOTE: Specifications in this catalog are for general reference only and are subject to change without notice. To verify product information, please contact a Delphi representative.

Peters de Laet
503-661-5088 – phone 503-661-5328 – fax
www.pdel.com

Modular

280 Metri-Pack Bus Bar Female Terminals Unsealed 15.0mm Centerline Spacing

Base Part # to Order	Type	Cable Range (mm^2)	Part # After Termination	Material	Plating
12160635	1Way	5.0	12160643	Beryllium Copper	Tin
12160636	1Way	3.0 - 2.0	12160644	Beryllium Copper	Tin
12160637	1Way	1.0 - 0.80	12160645	Beryllium Copper	Tin
12160638	1Way	0.50 - 0.35	12160646	Beryllium Copper	Tin
12160641	1Way	1.0 - 0.80 (2 Req'd.)	12160665	Beryllium Copper	Tin
12160640	1Way	0.50 (2 Req'd.)	12160663	Beryllium Copper	Tin
12160642	1Way	0.35 (2 Req'd.)	12160667	Beryllium Copper	Tin
12160635	2Way	5.0	12160648	Beryllium Copper	Tin
12160636	2Way	3.0 - 2.0	12160649	Beryllium Copper	Tin
12160637	2Way	1.0 - 0.80	12160650	Beryllium Copper	Tin
12160641	2Way	1.0 - 0.80 (2 Req'd.)	12160666	Beryllium Copper	Tin
12160635	3Way	5.0	12160652	Beryllium Copper	Tin
12160636	3Way	3.0 - 2.0	12160653	Beryllium Copper	Tin
12160637	3Way	1.0 - 0.80	12160654	Beryllium Copper	Tin
12160638	3Way	0.50 - 0.35	12160655	Beryllium Copper	Tin
12160640	3Way	0.50 (2 Req'd.)	12160664	Beryllium Copper	Tin
12160635	4Way	5.0	12160657	Beryllium Copper	Tin
12160636	4Way	3.0 - 2.0	12160658	Beryllium Copper	Tin
12160635	5Way	5.0	12160660	Beryllium Copper	Tin
12160636	5Way	3.0 - 2.0	12160661	Beryllium Copper	Tin
12160635	6Way	5.0	12160662	Beryllium Copper	Tin

280 Metri-Pack Bus Bar Female Terminals Unsealed 16.2mm Centerline Spacing

Base Part # to Order	Type	Cable Range (mm^2)	Part # After Termination	Material	Plating
12110710	2Way	5.0	12110717	Beryllium Copper	Tin
12110709	2Way	3.0 - 2.0	12110713	Beryllium Copper	Tin
12110708	2Way	1.0 - 0.80	12110711	Beryllium Copper	Tin
12110710	3Way	5.0	12110718	Beryllium Copper	Tin
12110709	3Way	3.0 - 2.0	12110714	Beryllium Copper	Tin
12110708	3Way	1.0 - 0.80	12110712	Beryllium Copper	Tin
12110710	4Way	5.0	12110719	Beryllium Copper	Tin
12110709	4Way	3.0- 2.0	12110715	Beryllium Copper	Tin
12110710	5Way	5.0	12110720	Beryllium Copper	Tin
12110709	5Way	3.0 - 2.0	12110716	Beryllium Copper	Tin

280 Metri-Pack Female Terminals Unsealed

Part #	Cable Range (mm^2)	Material	Plating
12015858	5.0 - 3.0	Tin Brass	Tin
12129494	3.0 - 2.0	Tin Brass	Tin
12066214	2.0 - 1.0	Tin Brass	Tin
12034046	0.80 - 0.50	Tin Brass	Tin
12052217	0.50 - 0.35	Tin Brass	Tin

NOTE: Specifications in this catalog are for general reference only and are subject to change without notice. To verify product information, please contact a Delphi representative.

Peters de Laet
503-661-5088 – phone 503-661-5328 – fax
www.pdel.com

Modular

280 Metri-Pack Bus Bar Tangless Female Terminals Unsealed 16.2mm Centerline Spacing

TANGLESS

Base Part # to Order	Type	Cable Range (mm²)	Part # After Termination	Material	Plating
12110647	1Way	5.0	12110657	Beryllium Copper	Tin
12110646	1Way	3.0 - 2.0	12110652	Beryllium Copper	Tin
12110645	1Way	1.0 - 0.80	12110649	Beryllium Copper	Tin
12110644	1Way	0.50 - 0.35	12110648	Beryllium Copper	Tin
12110662	1Way	1.0 - 0.80 (2 Req'd.)	12110663	Beryllium Copper	Tin
12110664	1Way	0.35 (2 Req'd.)	12110665	Beryllium Copper	Tin
12110685	1Way	0.50 (2 Req'd.)	12110686	Beryllium Copper	Tin
12110647	2Way	5.0	12110658	Beryllium Copper	Tin
12110646	2Way	3.0 - 2.0	12110653	Beryllium Copper	Tin
12110645	2Way	1.0 - 0.80	12110650	Beryllium Copper	Tin
12110647	3Way	5.0	12110659	Beryllium Copper	Tin
12110646	3Way	3.0 - 2.0	12110654	Beryllium Copper	Tin
12110645	3Way	1.0 - 0.80	12110651	Beryllium Copper	Tin
12110647	4Way	5.0	12110660	Beryllium Copper	Tin
12110646	4Way	3.0 - 2.0	12110655	Beryllium Copper	Tin
12110647	5Way	5.0	12110661	Beryllium Copper	Tin
12110646	5Way	3.0 - 2.0	12110656	Beryllium Copper	Tin

280 Metri-Pack Tangless Female Terminals Unsealed

TANGLESS

Part #	Cable Range (mm²)	Material	Plating
12129425	5.0 - 3.0	Tin Brass	Tin
12129663	3.0	Tin Brass	Tin
12129424	2.0 - 1.0	Tin Brass	Tin
12110844	1.0 - 0.80	Tin Brass	Tin
12110843	0.50 - 0.35	Tin Brass	Tin
12129061	2.0 - 0.35	Tin Brass	Tin

480 Metri-Pack Relay Female Terminals Unsealed

Part #	Cable Range (mm²)	Material	Plating
12065892	3.0 - 2.0	Silicon Bronze	Tin
12065894	1.0 - 0.80	Silicon Bronze	Tin
12065893	0.50 - 0.35	Silicon Bronze	Tin
12103948	1.0 - 0.80 (2 Req'd.)	Silicon Bronze	Tin
12089236	0.35 (2 Req'd.)	Silicon Bronze	Tin

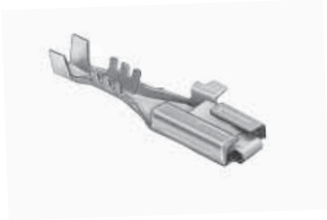

630 Metri-Pack Relay Female Terminals Unsealed

Part #	Cable Range (mm²)	Material	Plating
12084588	5.0	Tin Brass	Tin
12052227	3.0	Tin Brass	Tin
12015865	2.0 - 1.0	Tin Brass	Tin
12015864	1.0 - 0.80	Tin Brass	Tin
12052225	0.50 - 0.35	Tin Brass	Tin
12124559	0.80 - 0.50 (2 Req'd.)	Tin Brass	Tin

NOTE: Specifications in this catalog are for general reference only and are subject to change without notice. To verify product information, please contact a Delphi representative.

Peters de Laet
503-661-5088 – phone 503-661-5328 – fax
www.pdel.com

Modular

630 Metri-Pack Female Terminals Unsealed

Part #	Cable Range (mm^2)	Material	Plating
12084590	5.0 - 3.0	Tin Brass	Tin
12052224	3.0	Tin Brass	Tin
12084596	5.0 - 3.0 (2 Req'd.)	Tin Brass	Tin
12015870	2.0 - 1.0	Tin Brass	Tin
12015869	0.80 - 0.50	Tin Brass	Tin
12020035	0.80 - 0.50 (2 Req'd.)	Tin Brass	Tin
12052222	0.50 - 0.35	Tin Brass	Tin

800 MAXI Fuse Female Terminals Unsealed

Part #	Cable Range (mm^2)	Material	Plating
12110127	5.0	Tin Brass	Silver/Nickel
12092445	5.0 (2 Req'd.)	Tin Brass	Silver/Nickel
12065916	3.0 - 2.0	Tin Brass	Silver/Nickel
12092444	3.0 (2 Req'd.)	Tin Brass	Silver/Nickel
12110128	2.0 (2 Req'd.)	Tin Brass	Silver/Nickel
12065915	1.0 - 0.80	Tin Brass	Silver/Nickel
12065918	1.0 (2 Req'd.)	Tin Brass	Silver/Nickel

800 MAXI Fuse Bus Bar Female Terminals Unsealed

Part #	Material	Plating
12146564	Copper Alloy/SST	Silver/Nickel
12065930	Copper Alloy/SST	Silver/Nickel

Both required for Electrical Center 12146281, page 7.19

Ring Terminals

Stud Size	Hole Dia.	Part #	Cable Range (mm^2)	Material	Plating
M6	6.70	12103965	8.0	Copper Alloy	Tin
M6	6.70	12103511	1.0 - 0.8 (2 Req'd.)	Copper Alloy	Tin
M6	6.70	12103512	5.0	Copper Alloy	Tin
M6	6.70	12103513	3.0 - 2.0	Copper Alloy	Tin
M6	6.70	12103514	1.0 - 0.80	Copper Alloy	Tin
M8	8.50	12103502	8.0	Copper Alloy	Tin
M8	8.50	12103504	5.0	Copper Alloy	Tin
M8	8.50	12103506	3.0 - 2.0	Copper Alloy	Tin
M8	8.50	12103508	1.0 - 0.80	Copper Alloy	Tin

NOTE: Specifications in this catalog are for general reference only and are subject to change without notice. To verify product information, please contact a Delphi representative.

Peters de Laet
503-661-5088 – phone 503-661-5328 – fax
www.pdel.com

Modular

6.3 VF Female Terminals Unsealed

Part #	Cable Range (mm²)	Material	Plating
12185268	1.0-0.50	Copper Nickel Silicone	Tin
12185269	2.5 - 0.50	Copper Nickel Silicone	Tin
12157764	4.0	Copper Nickel Silicone	Tin

AF Female Terminals Unsealed

Part #	Cable Range (mm²)	Material
12131456	1.0-0.50	CuZn 30
12131448	2.5-1.5	CuZn 30
12131455	6.0-4.0	CuZn 30

280 Metri-Pack Tangless Female Terminals Sealed

TANGLESS

Part #	Cable Range (mm²)	Material	Plating
12110853	5.0 - 3.0	Tin Brass	Tin
12129409	2.0	Tin Brass	Tin

630 Metri-Pack Pull-to-Seat Female Terminals

Part #	Cable Range (mm²)	Material	Plating
12033997	3.0	Tin Brass	Tin
12066614	2.0 - 1.0	Tin Brass	Tin
12020156	0.80 - 0.50	Tin Brass	Tin

280 Metri-Pack Cable Seals

Reel Part #	Loose Part #	Cable Dia.	Material	Color
12015360	15324981	4.30-3.45	Silicone	Blue
12015359	15324980	3.49-2.81	Silicone	Gray
12015284	15324982	2.85-2.03	Silicone	Green
12041352	15324984	2.42-2.03	Silicone	Tan
12089444	15324985	2.15-1.60	Silicone	Purple
12034365	15324983	1.70-1.29	Silicone	Dk. Red

280 Metri-Pack Cavity Plug*

Part #	Cavity Inside Dia.	Material	Color
12010300	6.7mm	Silicone	Green

*Cavity plugs seal unused female and male cavities.

Pull-to-Seat Cable Seal Plugs*

Part #	Description	Material	Color	Cable Range (mm²)	Type
12065266	Seal Plug	PA6	Md. Gray	1.85-1.65	Machine Insertion
12034413	Seal Plug	PA6	Black	1.85-1.10	Hand Insertion

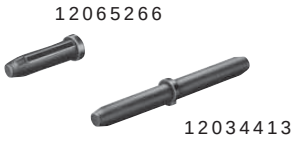

*Cavity plugs seal unused female and male cavities.

NOTE: Specifications in this catalog are for general reference only and are subject to change without notice. To verify product information, please contact a Delphi representative.

Peters de Laet
503-661-5088 – phone 503-661-5328 – fax
www.pdel.com

Modular
MINI® Fuse Modules

A. Part No: 12191544

Description:	MINI Fuse Module
Size:	69.2L x 94.5H x 38.2W
Color:	Black
Material:	PA66 HS IM 14% GF
Terminals:	See Page 7.4 Bus Bar 15.0mm Centerline
Application:	20 MINI® Fuses

B. Part No: 12146947

Description:	Secondary Lock
Color:	Blue
Material:	PA66 HS

C. Part No: 15324032

Description:	Cover
Size:	53.4L x 102.0H x 45.9W
Color:	Black
Material:	PA6

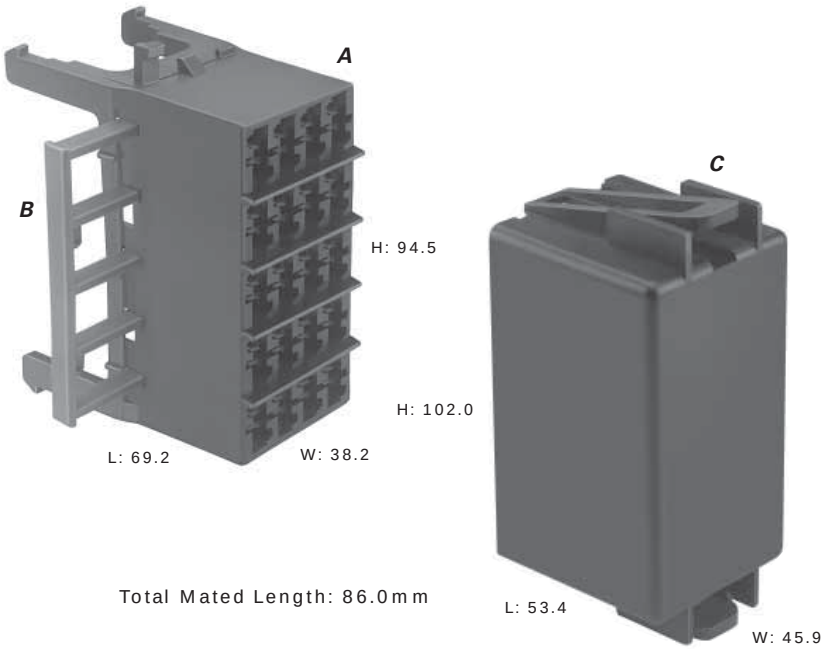

Total Mated Length: 86.0mm

D. Part No: 12177145

Description:	MINI Fuse Module
Size:	69.2L x 113.0H x 38.2W
Color:	Black
Material:	PA66 HS IM 14% GF
Terminals:	See Page 7.4 Bus Bar 15.0mm Centerline
Application:	28 MINI® Fuses

E. Part No: 12092507

Description:	Secondary Lock
Color:	Blue
Material:	PBT IM

F. Part No: 15495959

Description:	Latch
Number Req:	2
Color:	Black
Material:	1050 Steel Annealed

G. Part No: 12110043

Description:	Cover
Size:	43.2L x 112.8H x 48.5W
Color:	Black
Material:	PA66 HS IM 14% GF

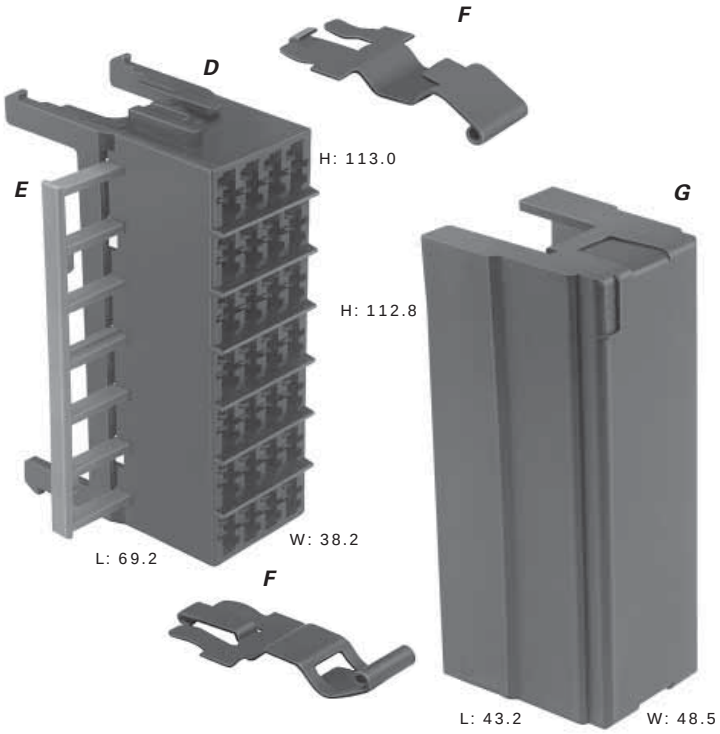

Total Mated Length: 77.6mm

NOTE: Specifications in this catalog are for general reference only and are subject to change without notice. To verify product information, please contact a Delphi representative.

Peters de Laet
503-661-5088 – phone 503-661-5328 – fax
www.pdel.com

Modular
MAXI™ Fuse Modules

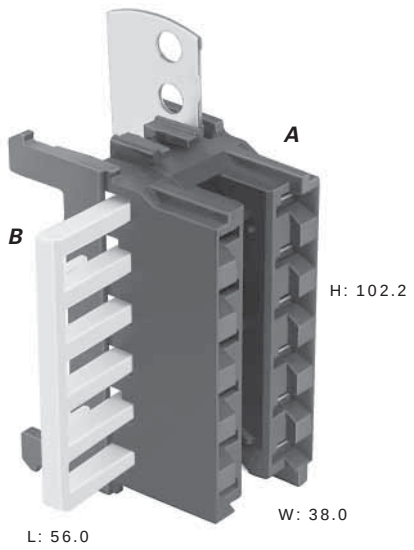

A. Part No: **12110129** (Right Battery Feed)
12077569 (Left Battery Feed)
12160829 (w/o Bus Bar)

Description:	MAXI Fuse Assembly Module
Size:	56.0L x 102.2H x 38.0W
Color:	Black
Material:	PA66 HS 33% GF
Terminals:	See Page 7.6, 800 MAXI Fuse Female
Application:	6 MAXI Fuses

B. Part No: **12077563**

Description:	Secondary Lock
Color:	Natural
Material:	PA66 HS

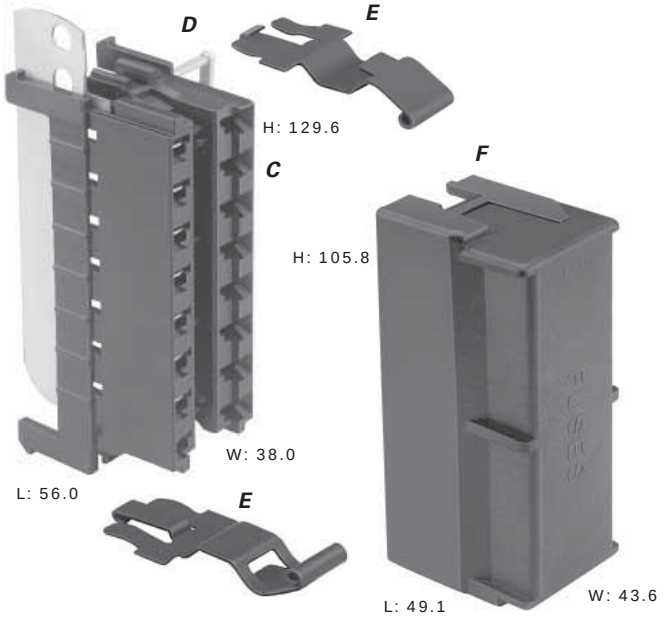

Total Mated Length: 77.5mm

C. Part No: **12092231** (Right Battery Feed)
12092220 (Left Battery Feed. Base Design Req'd.)
12110415 (w/o Bus Bar)

Description:	MAXI Fuse Assembly Module
Size:	56.0L x 129.6H x 38.0W
Color:	Black
Material:	PA66 HS 33% GF
Terminals:	See Page 7.6, 800 MAXI Fuse Female
Application:	8 MAXI Fuses

D. Part No: **12077532**

Description:	Secondary Lock
Color:	Natural
Material:	PA66 HS IM

E. Part No: **15495959**

Description:	Latch
Number Req:	2
Color:	Black
Material:	1050 Steel Annealed

F. Part No: **12077538**

Description:	Cover
Size:	49.1L x 105.8H x 43.6W
Color:	Black
Material:	PA66 HS IM 14% GF

NOTE: Specifications in this catalog are for general reference only and are subject to change without notice. To verify product information, please contact a Delphi representative.

Peters de Laet
503-661-5088 – phone 503-661-5328 – fax
www.pdel.com

Modular Relay Modules

A. Part No: 12077571

Description:	Relay Module
Size:	50.0L x 86.2H x 38.2W
Color:	Black
Material:	PA66 HS IM
Terminals:	See Page 7.5, 7.6, 480 Metri-Pack Relay and 630 Metri-Pack Female
Application:	6 Micro-Relays (ISO)

B. Part No: 12077572

Description:	Secondary Lock
Number Req:	2
Color:	Blue
Material:	PBT HS IM

C. Part No: 15495959

Description:	Latch
Number Req:	2
Color:	Black
Material:	1050 Steel Annealed

D. Part No: 12160897

Description:	Cover
Size:	49.0L x 82.6H x 43.0W
Color:	Black
Material:	PA6

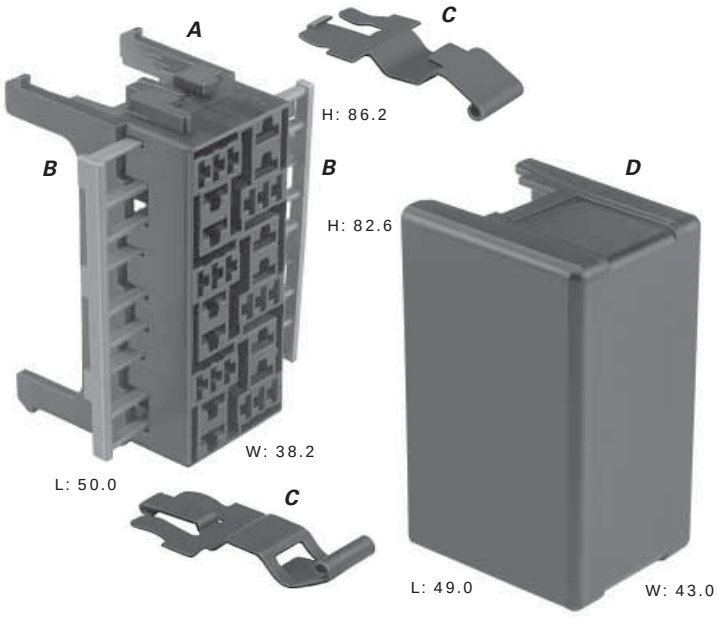

Total Mated Length: 78.2mm

E. Part No: 15423524

Description:	Relay Module
Size:	50.0L x 86.8H x 37.6W
Color:	Black
Material:	PA66 HS IM
Terminals:	See Page 7.5, 630 Metri-Pack Relay
Application:	2 Mini-Relays (ISO)

F. Part No: 12033872

Description:	TPA
Number Req:	2
Color:	Natural
Material:	PA6

G. Part No: 15495959

Description:	Latch
Number Req:	2
Color:	Black
Material:	1050 Steel Annealed

H. Part No: 12160897

Description:	Cover
Size:	49.0L x 82.6H x 43.0W
Color:	Black
Material:	PA6

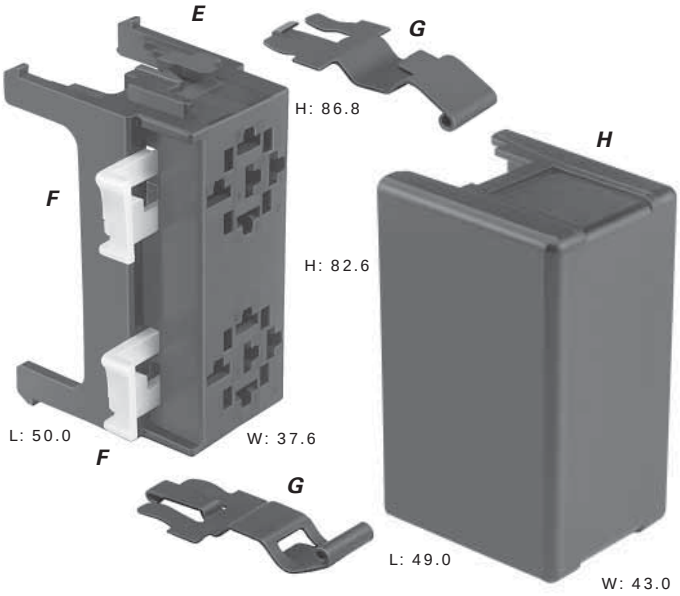

Total Mated Length: 78.2mm

NOTE: Specifications in this catalog are for general reference only and are subject to change without notice. To verify product information, please contact a Delphi representative.

Peters de Laet
503-661-5088 – phone 503-661-5328 – fax
www.pdel.com

Modular
Relay Modules

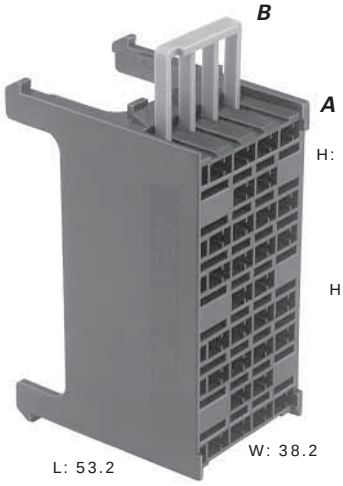

Total Mated Length: 82.1mm

TANGLESS

A. Part No: 12146836†

Description:	Relay Module
Size:	53.2L x 84.3H x 38.2W
Color:	Black
Material:	PA66 HS IM
Terminals:	See Page 7.5, 280 Metri-Pack Tangless
Application:	1 Mini-Relay / 2 Micro-Relays

B. Part No: 12146835

Description:	Secondary Lock
Color:	Blue
Material:	PA66 HS IM

C. Part No: 15324032

Description:	Cover
Size:	53.4L x 102.0H x 45.9W
Color:	Black
Material:	PA6

† Do not use thin stock female terminals with 1.0mm² or larger cable.

NOTE: Specifications in this catalog are for general reference only and are subject to change without notice. To verify product information, please contact a Delphi representative.

Peters de Laet
503-661-5088 – phone 503-661-5328 – fax
www.pdel.com

Modular
Hybrid Modules

A. Part No: 12160504

Description:	Hybrid Module
Size:	52.2L x 85.9H x 42.2W
Color:	Black
Material:	PA66 HS IM 14% GF
Terminals:	See Page 7.5, 280 Bus Bar 16.2mm Centerline Tangless
Application:	MINI® Fuse, Mini-Relay, Micro-Relay
Note:	Mylar overlays available upon request

B. Part No: 12160541

Description:	Secondary Lock
Color:	Blue
Material:	PA66 HS IM

C. Part No: 15495959

Description:	Latch
Number Req:	2
Color:	Black
Material:	1050 Steel Annealed

D. Part No: 12160897

Description:	Cover
Size:	49.0L x 82.6H x 43.0W
Color:	Black
Material:	PA6

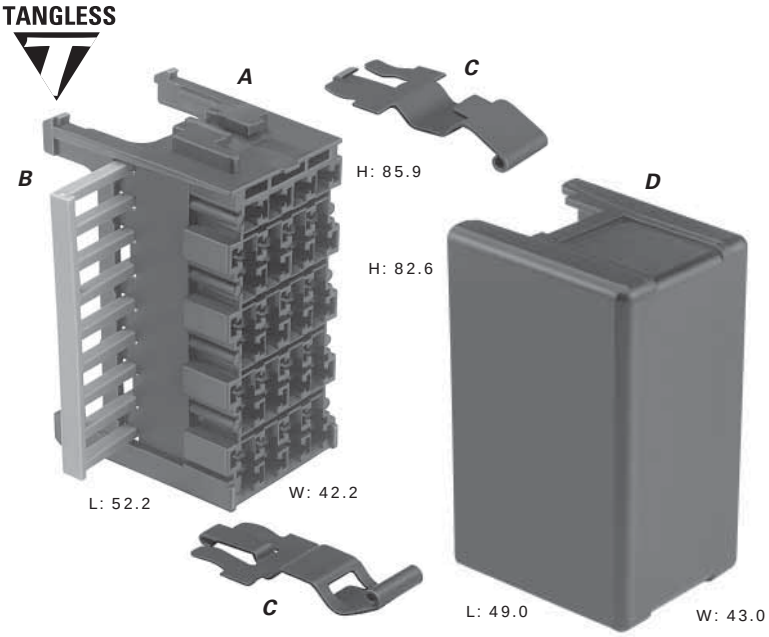

Total Mated Length: 80.4mm

E. Part No: 12110594

Description:	Hybrid Module
Size:	67.3L x 75.5H x 38.2W
Color:	Black
Material:	PA66 HS IM 14% GF
Terminals:	See Page 7.4-7.6, 280 Bus Bar 15.0mm Centerline, 480 Metri-Pack Relay and 630 Metri-Pack Female
Application:	6 MINI® Fuses / 4 Micro-Relays (ISO)

F. Part No: 12110595

Description:	Secondary Lock
Color:	Blue
Material:	PA66 HS IM

G. Part No: 15495959

Description:	Latch
Number Req:	2
Color:	Black
Material:	1050 Steel Annealed

H. Part No: 12110602

Description:	Cover
Size:	49.0L x 82.6H x 43.0W
Color:	Black
Material:	PA66 HS IM

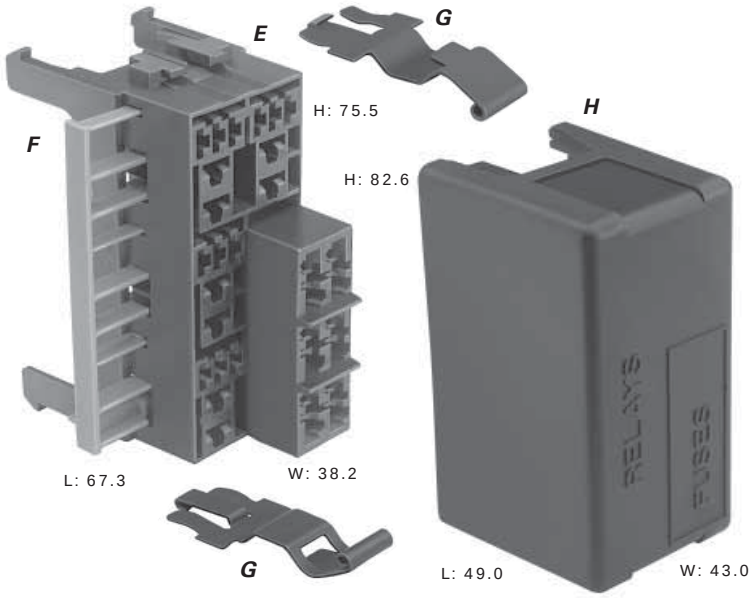

Total Mated Length: 70.3mm

NOTE: Specifications in this catalog are for general reference only and are subject to change without notice. To verify product information, please contact a Delphi representative.

Peters de Laet
503-661-5088 – phone 503-661-5328 – fax
www.pdel.com

Modular
Hybrid Modules

TANGLESS

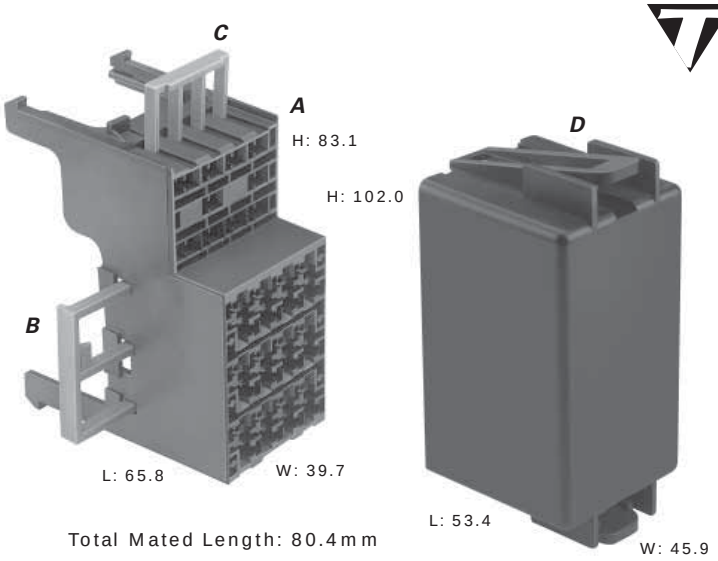

Total Mated Length: 80.4mm

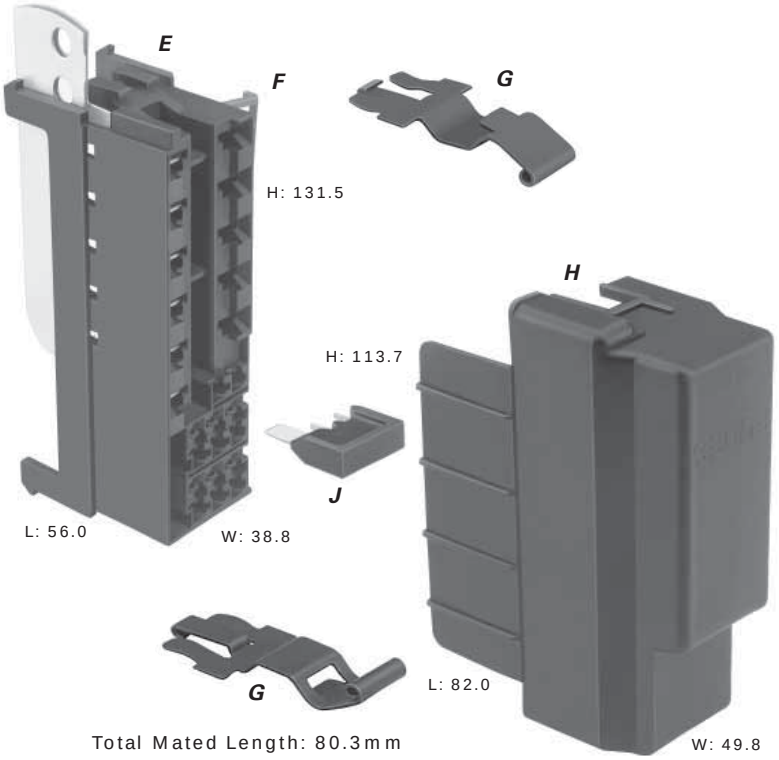

Total Mated Length: 80.3mm

A. Part No: 12146815

Description:	Hybrid Module
Size:	65.8L x 83.1H x 39.7W
Color:	Black
Material:	PA66 HS IM 14% GF
Terminals:	See Page 7.5, 280 Bus Bar 16.2mm Centerline Tangless and 280 Metri-Pack Tangless
Application:	12 MINI® Fuses / 1 Mini-Relay and 2 Micro-Relays

B. Part No: 12146816

Description:	Secondary Lock
Color:	Blue
Material:	PA66 HS IM

C. Part No: 12146817

Description:	Secondary Lock
Color:	Blue
Material:	PA66 HS IM

D. Part No: 15324032

Description:	Cover
Size:	53.4L x 102.0H x 45.9W
Color:	Black
Material:	PA6

E. Part No: 12191848 12191847 (w/o Bus Bar)

Description:	Hybrid Assembly Module
Size:	56.0L x 131.5H x 38.8W
Color:	Black
Material:	PA66 HS IM 14% GF
Terminals:	See Page 7.4-7.6, 280 Bus Bar 15.0mm Centerline and 800 MAXI Fuse Female
Application:	MINI® Fuse, MAXI™ Fuse, Mini-Relay, Micro-Relay

F. Part No: 12191849

Description:	Secondary Lock
Color:	Blue
Material:	PBT

G. Part No: 15495959

Description:	Latch
Number Req:	2
Color:	Black
Material:	1050 Steel Annealed

H. Part No: 15305152

Description:	Cover
Size:	82.0L x 113.7H x 49.8W
Color:	Black
Material:	PP

J. Part No: 12160674

Description:	Shunt
Color:	Black
Material:	PA66 HS IM
Note:	Provides Bussing to MINI® Fuses from MAXI™ Fuses

NOTE: Specifications in this catalog are for general reference only and are subject to change without notice. To verify product information, please contact a Delphi representative.

Peters de Laet
503-661-5088 – phone 503-661-5328 – fax
www.pdel.com

Modular

Electrical Center Base Application Guide

Use this guide to choose the proper base in combining fuse, relay, and hybrid module assemblies.

		Fuse Modules				Relay Modules			Hybrid Modules			
		Mini® Fuse		Maxi™ Fuse					(Fuses & Relays)			
	BASE STYLE	12191544	12177145	12110129 12077569 12160829	12092231 12110415	12077571	15423524	12146836	12160504	12110594	12191847 12146815	12191848
		Page 7.8	Page 7.8	Page 7.9	Page 7.9	Page 7.10	Page 7.10	Page 7.11	Page 7.12	Page 7.12	Page 7.13	Page 7.13
A	12084910 (1 Way)	■				■	■	■	■	■	■	
B	12191497 (1 Way)		■									
C	12077534 (1 Way w/ Battery Feed)				■							■
D	12092741 (3 Way)	■				■	■	■	■	■	■	
E	12092328 (3 Way w/ Battery Feed)	■		■		■	■	■	■	■	■	
F	12129121 (4 Way w/ Battery Feed)	■		■		■	■	■	■	■	■	
G*	12110041 (4 Way)	■	■			■	■	■	■	■	■	

*Note: 1 MINI Fuse Module (12177145) and a combination of 3 other modules.

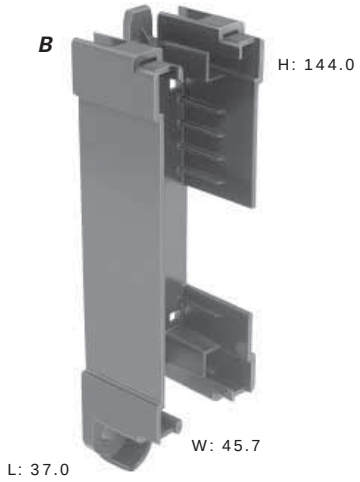

A. Part No: 12084910

Description:	1 Way Electrical Center Base
Size:	35.7L x 118.5H x 47.2W
Color:	Black
Material:	PA6
Application:	1 Module

B. Part No: 12191497

Description:	1 Way Electrical Center Base
Size:	37.0L x 144.0H x 45.7W
Color:	Black
Material:	PA6
Application:	1 Module

NOTE: Specifications in this catalog are for general reference only and are subject to change without notice. To verify product information, please contact a Delphi representative.

Peters de Laet
503-661-5088 – phone 503-661-5328 – fax
www.pdel.com

Modular

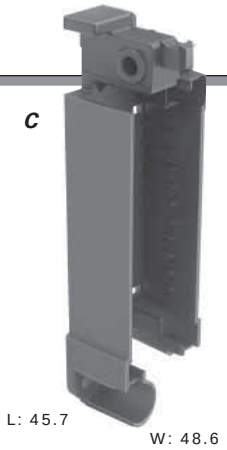

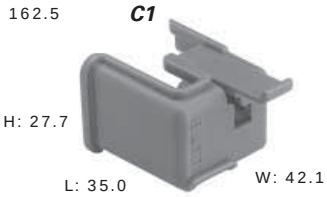

Total Mated Length: 80.3mm

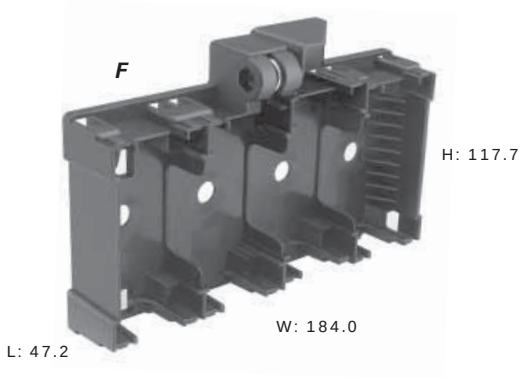

C. Part No: 12077534

Description:	1 Way Electrical Center Base Assembly
Size:	45.7L x 162.5H x 48.6W
Color:	Black
Material:	PA6
Application:	1 Module (w/ Battery Feed)

F. Part No: 12129121

Description:	4 Way Electrical Center Base Assembly
Size:	47.2L x 117.7H x 184.0W
Color:	Black
Material:	PA6
Application:	4 Modules (w/ Battery Feed)

C1. Part No: 12092332
(Horizontal Wire Feed)
12092669
(Vertical Wire Feed)

Description:	Battery Terminal Cover
Size:	35.0L x 27.7H x 42.1W
Color:	Red
Material:	PA6

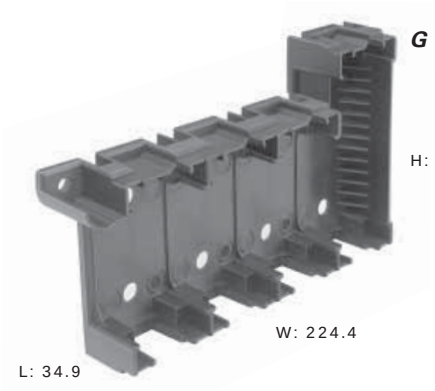

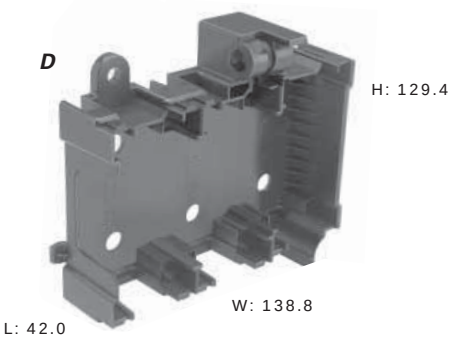

G. Part No: 12110041

Description:	4 Way Electrical Center Base
Size:	34.9L x 122.8H x 224.4W
Color:	Black
Material:	PA6
Application:	1 MINI Fuse Module (12177145) and a combination of 3 other modules

D. Part No: 12092741

Description:	3 Way Electrical Center Base
Size:	42.0L x 129.4H x 138.8W
Color:	Black
Material:	PA6
Application:	3 Modules

E. Part No: 12092328

Description:	3 Way Electrical Center Base Assembly
Size:	42.0L x 129.4H x 138.8W
Color:	Black
Material:	PA6
Application:	3 Modules (w/ Battery Feed)

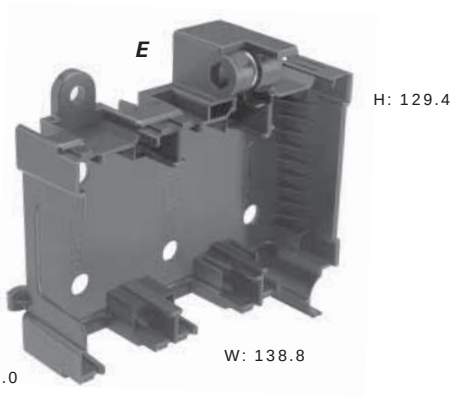

NOTE: Specifications in this catalog are for general reference only and are subject to change without notice. To verify product information, please contact a Delphi representative.

Peters de Laet
503-661-5088 – phone 503-661-5328 – fax
www.pdel.com

Traditional

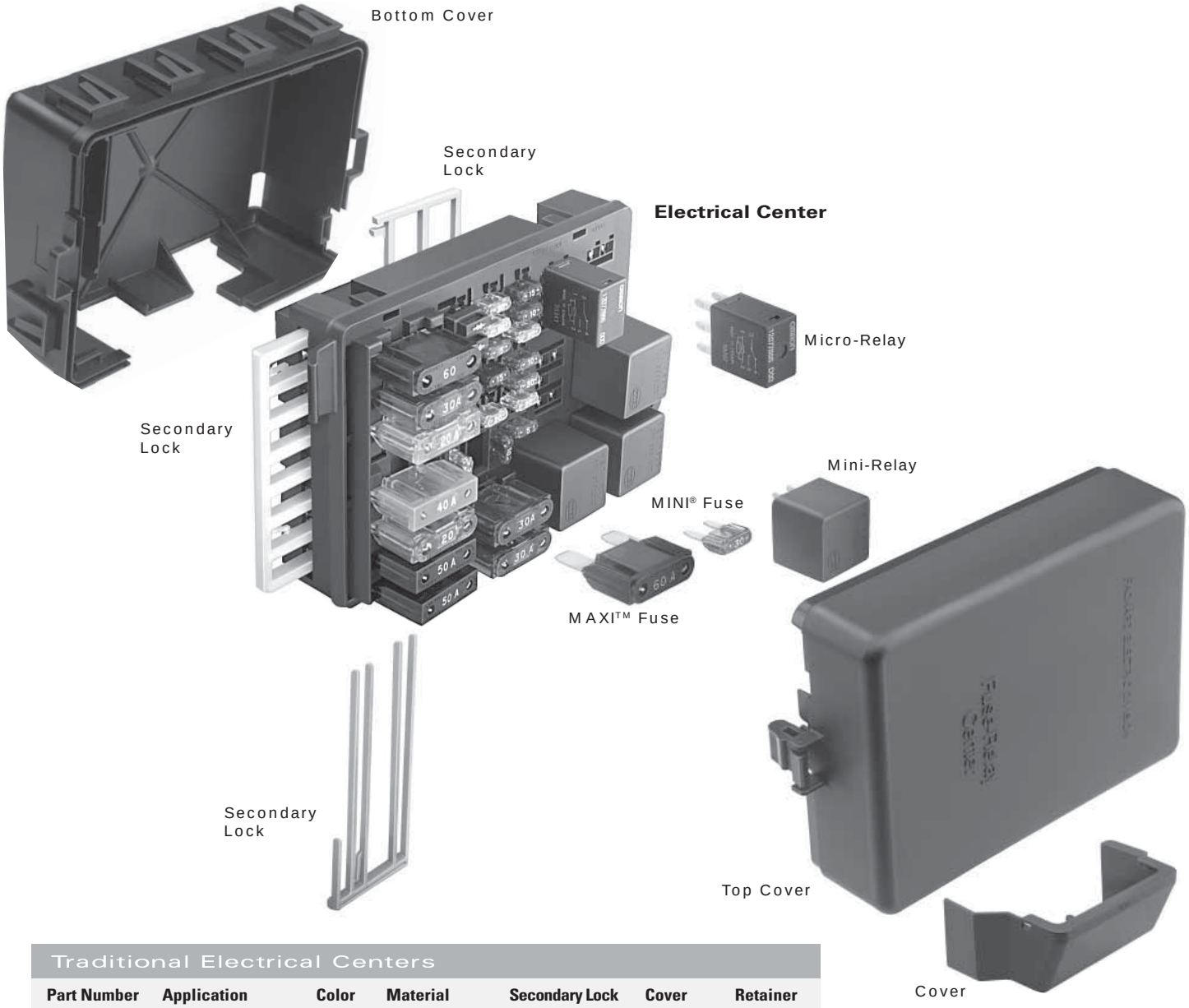

Traditional Electrical Centers

Part Number	Application	Color	Material	Secondary Lock	Cover	Retainer
12129833	12 MINI® Fuses, 14 Relays	Black	PA66 HS IM	12129835 12129834 12129836 12129837	12160906 12160277	
15358661	28 MINI® Fuses 1 Relay 2 Circuit Breakers	Black	PA66 HS IM 14%GF	12160677 12160678 12160679		12092748
12146281	10 MAXI™ Fuses 16 MINI® Fuses Micro-Relays Mini-Relays 2 Diodes	Black	PA66 HS IM	12146805 12146284 12077532 12146283	12146286 12162365 12160765	

SECTION NOTES:

Contact your regional support representative for assistance in selecting the appropriate Electrical Center to meet your need.

- Circuit breakers, fuses and diodes may be purchased directly from the manufacturer.

NOTE: Specifications in this catalog are for general reference only and are subject to change without notice. To verify product information, please contact a Delphi representative.

Peters de Laet
503-661-5088 – phone 503-661-5328 – fax
www.pdel.com

Traditional

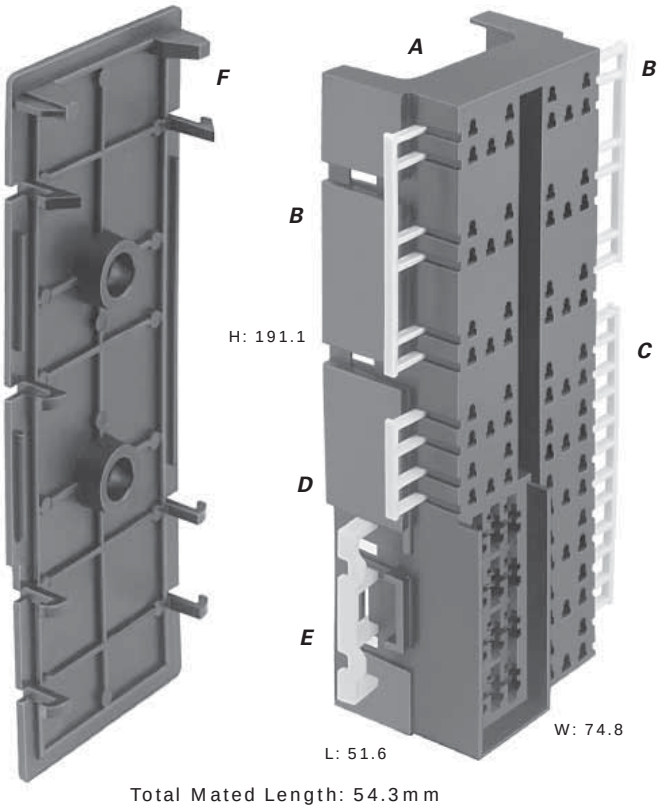

Total Mated Length: 54.3mm

A. Part No: 12129833

Description:	Convenience Center
Size:	51.6L x 191.1H x 74.8W
Color:	Black
Material:	PA66 HS IM
Terminals:	See Page 7.4
Applications:	12 MINI® Fuses, 14 Relays
Note:	12160277 Shipping Cover available.

B. Part No: 12129835

Description:	Secondary Lock
Color:	Natural
Number Req:	2
Material:	PBT

C. Part No: 12129834

Description:	Secondary Lock
Color:	Natural
Material:	PBT

D. Part No: 12129836

Description:	Secondary Lock
Color:	Natural
Material:	PBT

E. Part No: 12129837

Description:	Secondary Lock
Color:	Natural
Material:	PBT

F. Part No: 12160906

Description:	Cover
Color:	Black
Material:	PA66 HS IM

KEY:

B – 280 Metri-Pack Bus Bar 16.2mm Centerline

F – 280 Metri-Pack

Traditional Electrical Centers feature a combination of different terminal cavities, as indicated by the Key.

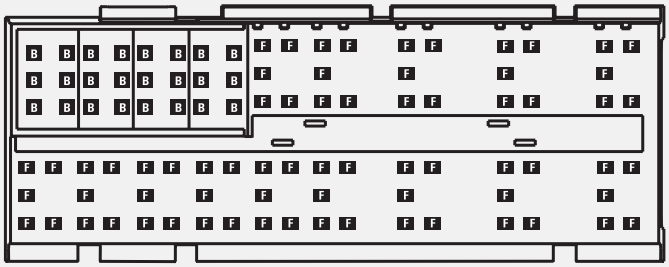

NOTE: Specifications in this catalog are for general reference only and are subject to change without notice. To verify product information, please contact a Delphi representative.

Peters de Laet
503-661-5088 – phone 503-661-5328 – fax
www.pdel.com

Traditional

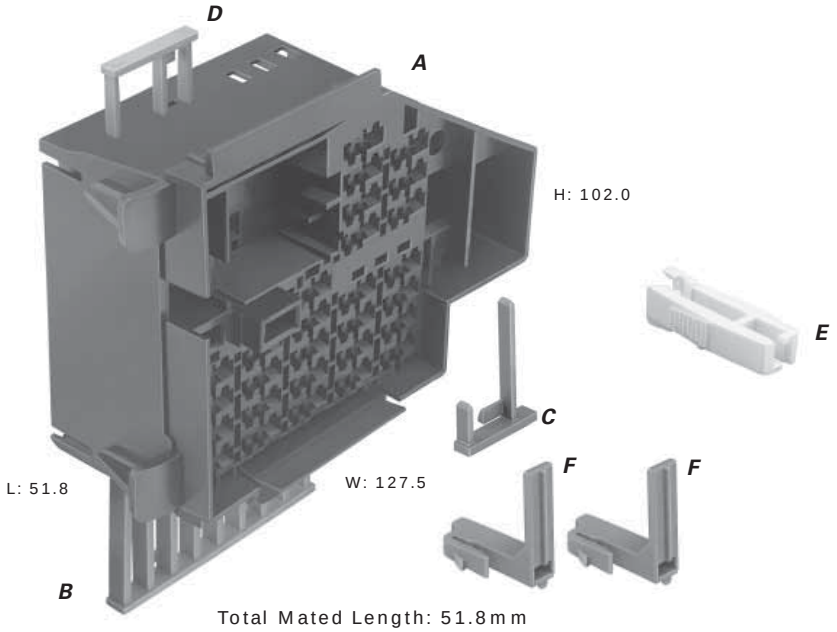

A. Part No: 15358661

Description:	Fuseblock
Size:	51.8L x 102.0H x 127.5W
Color:	Black
Material:	PA66 HS IM 14% GF
Terminals:	See Page 7.4
Applications:	28 MINI® Fuses, 1 Relay, 2 Circuit Breakers

B. Part No: 12160677

Description:	Secondary Lock
Color:	Blue
Material:	PBT

C. Part No: 12160678

Description:	Secondary Lock
Color:	Blue
Material:	PBT

D. Part No: 12160679

Description:	Secondary Lock
Color:	Blue
Material:	PBT

E. Part No: 12084791

Description:	Fuse Extractor
Color:	White
Material:	PA66

F. Part No: 12092748

Description:	Device Position Assurance
Number Req:	2
Color:	Red
Material:	PP

KEY:

B – 280 Metri-Pack Bus Bar 16.2mm Centerline
C – 280 Metri-Pack Bus Bar 15.0mm Centerline
F – 280 Metri-Pack

Traditional Electrical Centers feature a combination of different terminal cavities, as indicated by the Key.

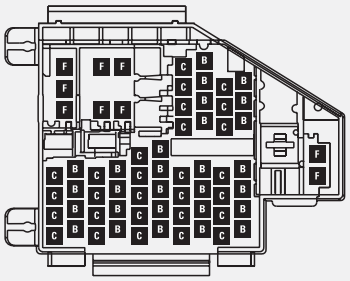

NOTE: Specifications in this catalog are for general reference only and are subject to change without notice. To verify product information, please contact a Delphi representative.

Peters de Laet
503-661-5088 – phone 503-661-5328 – fax
www.pdel.com

Traditional

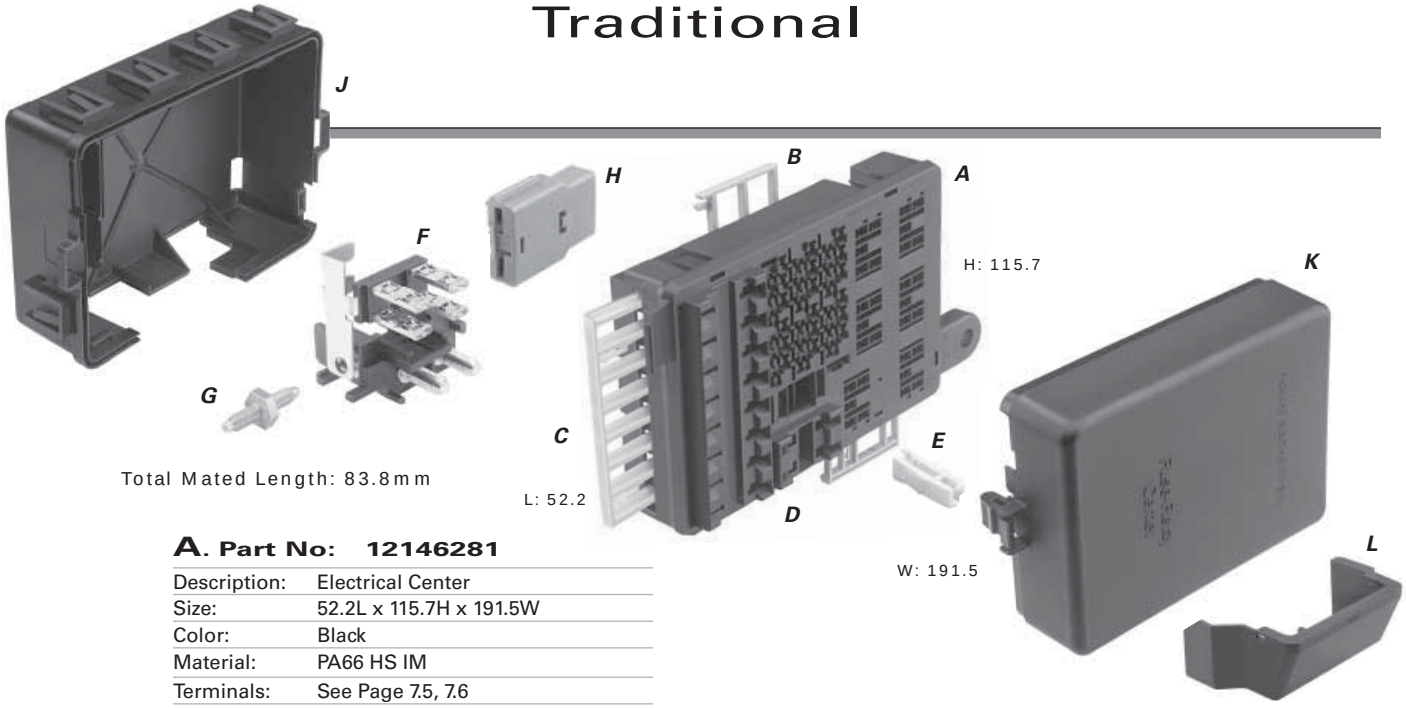

A. Part No: 12146281

Description:	Electrical Center
Size:	52.2L x 115.7H x 191.5W
Color:	Black
Material:	PA66 HS IM
Terminals:	See Page 7.5, 7.6
Applications:	10 MAXI™ Fuses, 16 MINI® Fuses, 2 Diodes, Micro-Relays, Mini-Relays

B. Part No: 12146284

Description:	Secondary Lock
Color:	Gray
Material:	PBT

C. Part No: 12077532

Description:	Secondary Lock
Color:	Natural
Material:	PA66 HS IM

D. Part No: 12146283

Description:	Secondary Lock
Color:	Gray
Material:	PBT

E. Part No: 12084791

Description:	Fuse Extractor
Color:	White
Material:	PA66

F. Part No: 15492611

Description:	Bus Stud Terminal Assembly
Color:	Black
Material:	PA66 HS IM 14% GF
Terminals:	See Page 7.6, M8 Ring

G. Part No: 12160759

Description:	Bolt
Material:	Steel
Terminals:	See Page 7.6, M6 Ring

H. Part No: 12146805

Description:	Secondary Lock
Color:	Gray
Material:	PP

J. Part No: 12146286

Description:	Bottom Cover
Color:	Black
Material:	PA66 HS IM
Note:	Cover will accept 6 external relays.

K. Part No: 12162365

Description:	Top Cover
Color:	Black
Material:	PA66 HS IM

L. Part No: 12160765

Description:	Bus Stud Assembly Cover
Color:	Black
Material:	PP IM

KEY:

- **A** – 280 Metri-Pack Bus Bar 16.2 Centerline Tangless
- **D** – 280 Metri-Pack Tangless
- – 800 MAXI Fuse Bus Bar
- – 800 MAXI™ Fuse
- – Spare MINI® Fuse Cavity

Traditional Electrical Centers feature a combination of different terminal cavities, as indicated by the Key.

- To assemble this electrical system, informational drawing 12146337 is available.

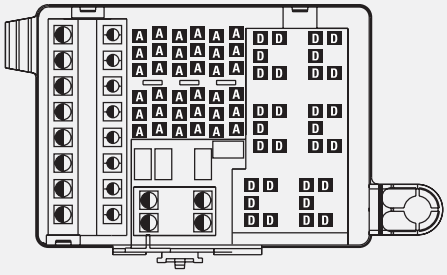

NOTE: Specifications in this catalog are for general reference only and are subject to change without notice. To verify product information, please contact a Delphi representative.

Peters de Laet
503-661-5088 – phone 503-661-5328 – fax
www.pdel.com

Traditional

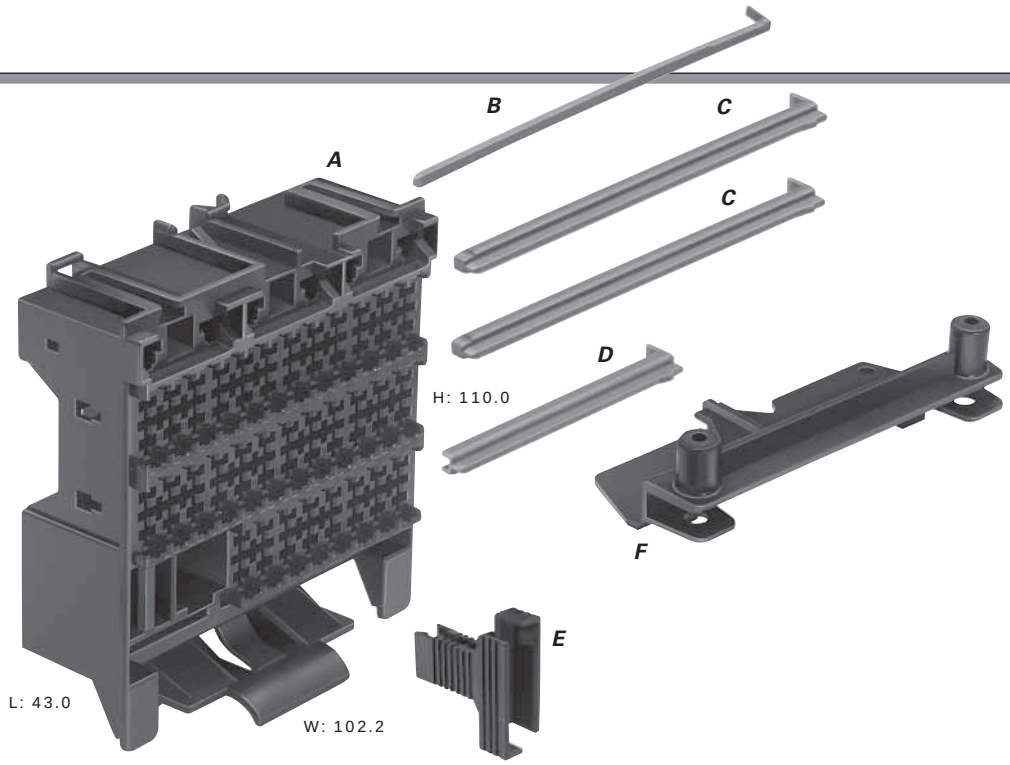

Total Mated Length: 60.0mm

A. Part No: 10740483

Description:	Fuseblock
Size:	43.0L x 110.0H x 102.2W
Color:	Black
Material:	PA66 HS
Terminals:	See Page 7.7
Applications:	32 ATO® Fuses, 3 MAXI™ Fuses

B. Part No: 10740484

Description:	Secondary Lock
Color:	Gray
Material:	PA6 15% GF

C. Part No: 10717812

Description:	Secondary Lock
Number Req:	2
Color:	Gray
Material:	PA6 15% GF

D. Part No: 10740485

Description:	Secondary Lock
Color:	Gray
Material:	PA6 15% GF

E. Part No: 12185643 (Optional)

Description:	Fuse Extractor
Color:	Black
Material:	PA6

F. Part No: 10718038

Description:	Hinge
Color:	Black
Material:	PP

KEY:

▼ 800 Metri-Pack

▲ 6.3 VF

Traditional Electrical Centers feature a combination of different terminal cavities, as indicated by the Key.

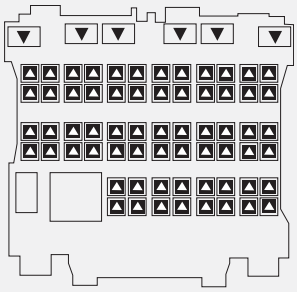

NOTE: Specifications in this catalog are for general reference only and are subject to change without notice. To verify product information, please contact a Delphi representative.

Peters de Laet
503-661-5088 – phone 503-661-5328 – fax
www.pdel.com

Traditional

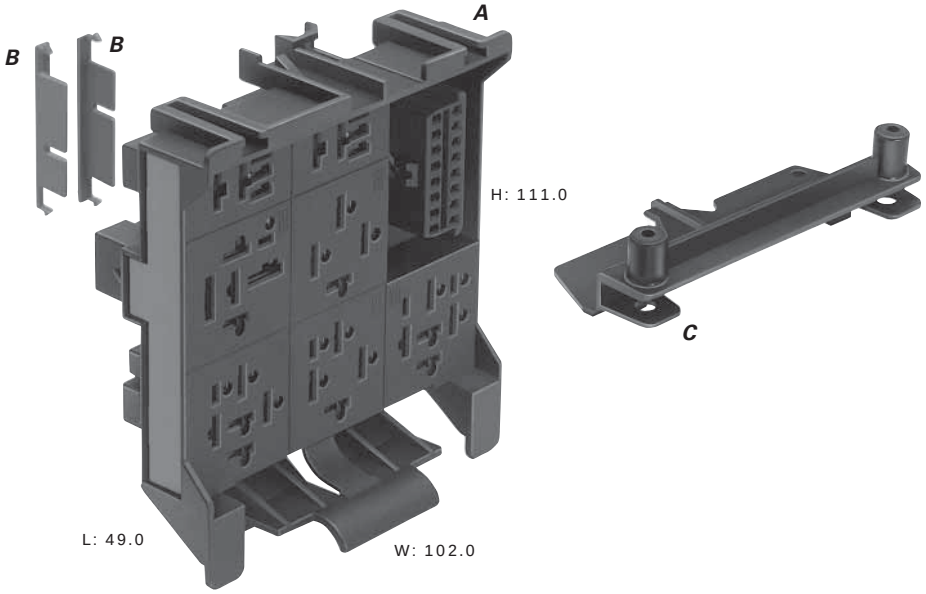

Total Mated Length: 50.0mm

A. Part No: 10740486

Description:	Relay Block
Size:	49.0L x 111.0H x 102.0W
Color:	Black
Material:	PA6 10% GF 20% GB
Terminals:	See Page 7.7
Applications:	2 Mini-Relays, 4 Standard Relays, 1 Relay, OBD II

B. Part No: 10740487

Description:	TPA
Number req:	2
Color:	Gray
Material:	PA6 15% GF

C. Part No: 10718038

Description:	Hinge
Color:	Black
Material:	PP

SECTION NOTES:

- Terminals available from manufacturer.

TANGLESS

KEY:

- ◪ 150 Metri-Pack
- ■ 280 Metri-Pack
- ▲ 630 Metri-Pack
- ☆ 4.8 Faston
- ★ 6.3 Faston
- ✪ 9.5 Faston

Traditional Electrical Centers feature a combination of different terminal cavities, as indicated by the Key.

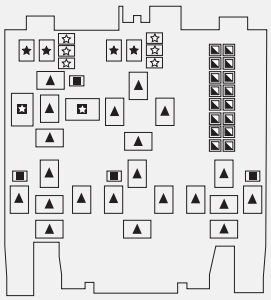

NOTE: Specifications in this catalog are for general reference only and are subject to change without notice. To verify product information, please contact a Delphi representative.

Peters de Laet
503-661-5088 – phone 503-661-5328 – fax
www.pdel.com

Traditional

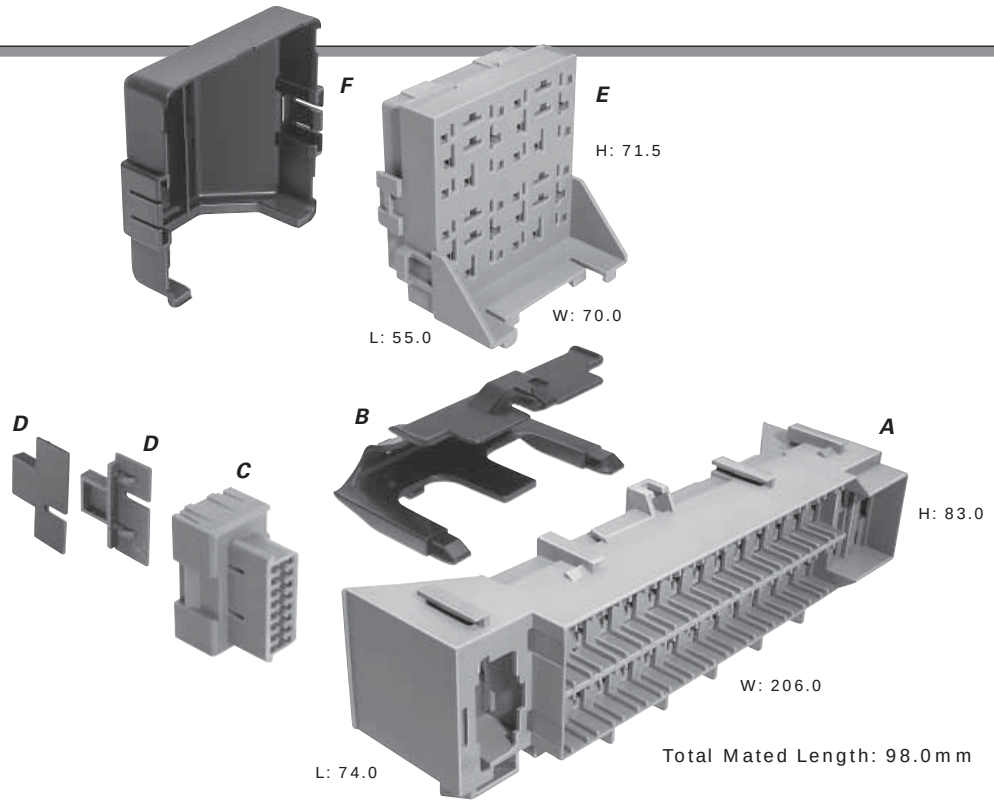

A. Part No: 10718620

Description:	Fuse Module
Size:	74.0L x 83.0H x 206.0W
Color:	Gray
Material:	PA6 10% GF 20% GB
Terminals:	See Page 7.4
Applications:	26 ATO® Fuses, 2 MAXI™ Fuses

B. Part No: 10720018

Description:	Cover
Color:	Black
Material:	ABS

C. Part No: 15327645

Description:	OBD II Connector 16F
Color:	Gray
Material:	PA6

D. Part No: 15327646

Description:	TPA
Number Req:	2
Color:	Black
Material:	PA6 15% GF

E. Part No: 10718621

Description:	Relay Module
Size:	55.0L x 71.5H x 70.0W
Color:	Gray
Material:	PA6 10% GF 20% GB
Application:	4 Standard Relays

F. Part No: 10720017

Description:	Cover
Color:	Black
Material:	ABS

KEY:

TANGLESS

- ◪ 150 Metri-Pack
- ■ 280 Metri-Pack
- ▲ 630 Metri-Pack
- ▼ 800 Metri-Pack
- ◆ 6.3 VF

Traditional Electrical Centers feature a combination of different terminal cavities, as indicated by the Key.

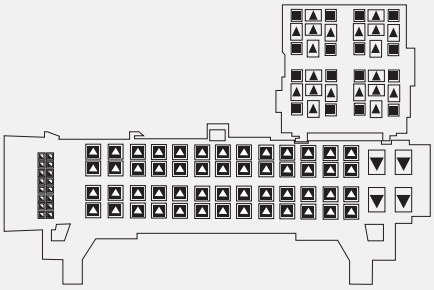

NOTE: Specifications in this catalog are for general reference only and are subject to change without notice. To verify product information, please contact a Delphi representative.

Peters de Laet
503-661-5088 – phone 503-661-5328 – fax
www.pdel.com

Traditional

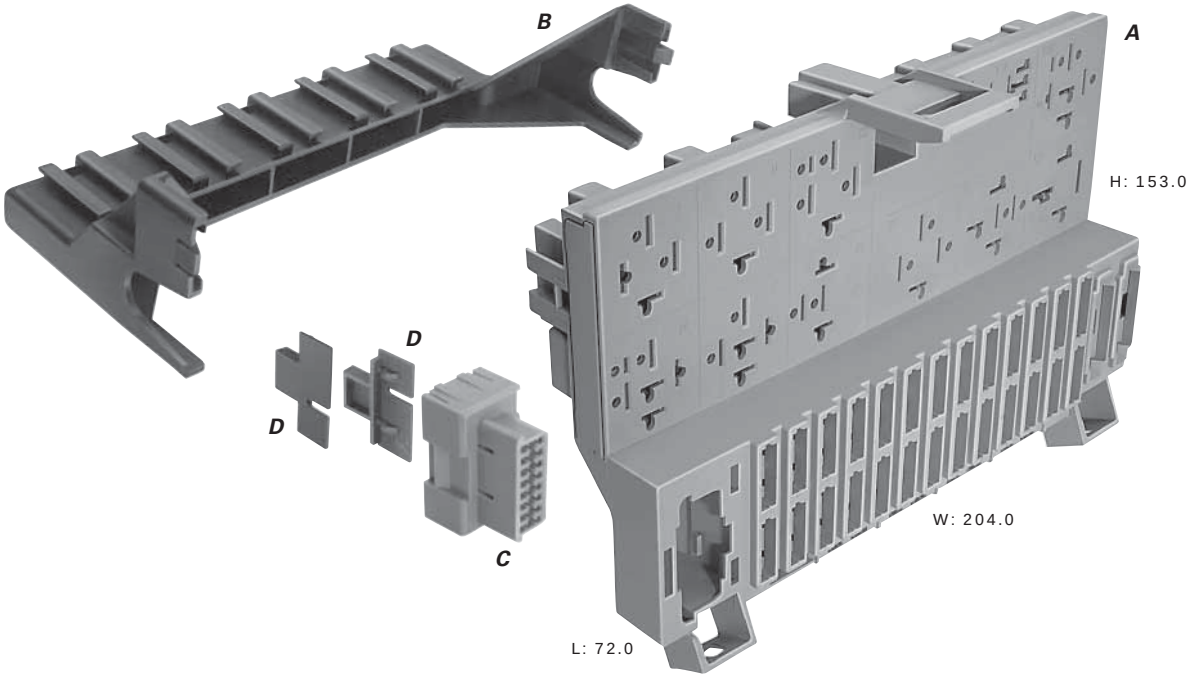

Total Mated Length: 148.0mm

A. Part No: 15344665

Description:	Electrical Center
Size:	72.0L x 153.0H x 204.0W
Color:	Gray
Material:	PA6 20% GF 10% GB
Terminals:	See Page 7.4
Applications:	26 ATO® Fuses, 2 MAXI™ fuses, 2 Mini-Relays, 9 Standard Relays, 1 Relay

B. Part No: 10719976 (Optional)

Description:	Holder
Color:	Black
Material:	PA6 30% GF
Applications:	5 Position Carrier Relay

C. Part No: 15327645

Description:	OBD II Connector 16F
Color:	Gray
Material:	PA6

D. Part No: 15327646

Description:	TPA
Number Req:	2
Color:	Black
Material:	PA6 15% GF

SECTION NOTES:

- Terminals available from manufacturer.

KEY: TANGLESS

- ◪ 150 Metri-Pack
- ■ 280 Metri-Pack
- ▲ 630 Metri-Pack
- ▼ 800 Metri-Pack
- ◭ 6.3 VF
- ☆ 4.8 Faston
- ★ 6.3 Faston
- ✪ 9.5 Faston

Traditional Electrical Centers feature a combination of different terminal cavities, as indicated by the Key.

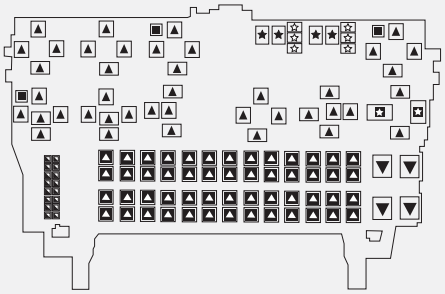

NOTE: Specifications in this catalog are for general reference only and are subject to change without notice. To verify product information, please contact a Delphi representative.

Peters de Laet
503-661-5088 – phone 503-661-5328 – fax
www.pdel.com

Traditional

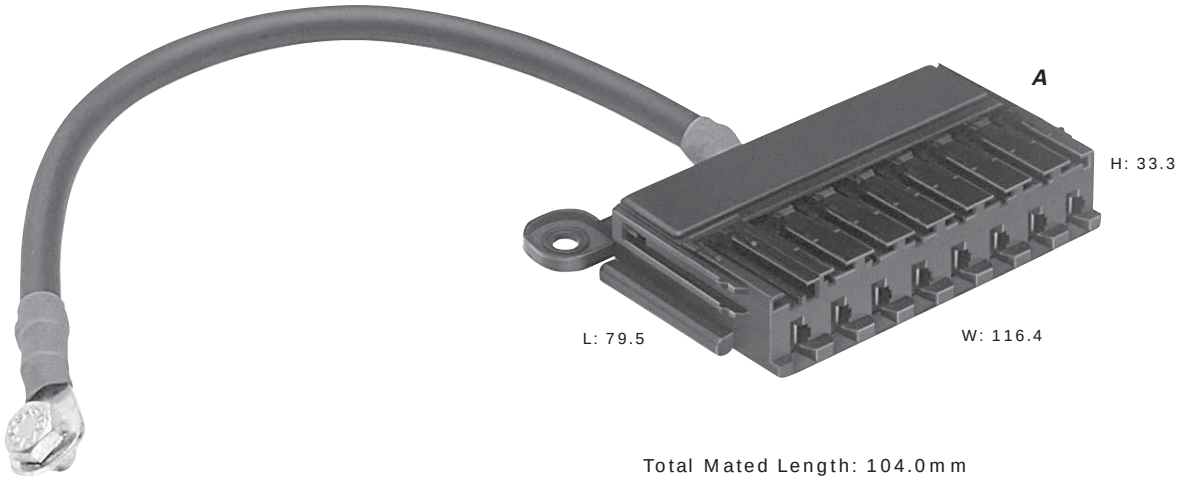

Total Mated Length: 104.0mm

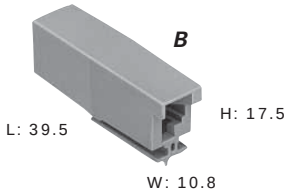

A. Part No: 15327622

Description:	Module Assembly 8F
Size:	79.5L x 33.3H x 116.4W
Color:	Black
Material:	PA66 HS IM

B. Part No: 15327626

Description:	Connector 1F
Size:	39.5L x 17.5H x 10.8W
Color:	Gray
Material:	PA66 HS IM
Terminals:	See Page 7.6
Application:	1 MAXI™ Fuse

NOTE: Specifications in this catalog are for general reference only and are subject to change without notice. To verify product information, please contact a Delphi representative.

Peters de Laet
503-661-5088 – phone 503-661-5328 – fax
www.pdel.com

Traditional

C. Part No: 15327625

Description:	Connector 1F
Size:	39.5L x 17.5H x 10.8W
Color:	Yellow
Material:	PA66 HS IM
Terminals:	See Page 7.6
Application:	1 MAXI™ Fuse

D. Part No: 15327627

Description:	Connector 2F
Size:	39.5L x 17.5H x 22.8W
Color:	Blue
Material:	PA66 HS IM
Terminals:	See Page 7.6
Application:	2 MAXI™ Fuses

E. Part No: 15327628

Description:	Connector 3F
Size:	39.5L x 17.5H x 34.7W
Color:	Blue
Material:	PA66 HS IM
Terminals:	See Page 7.6
Application:	3 MAXI™ Fuses

F. Part No: 15327694

Description:	Cover
Color:	Black
Material:	PA66 HS 15% GF

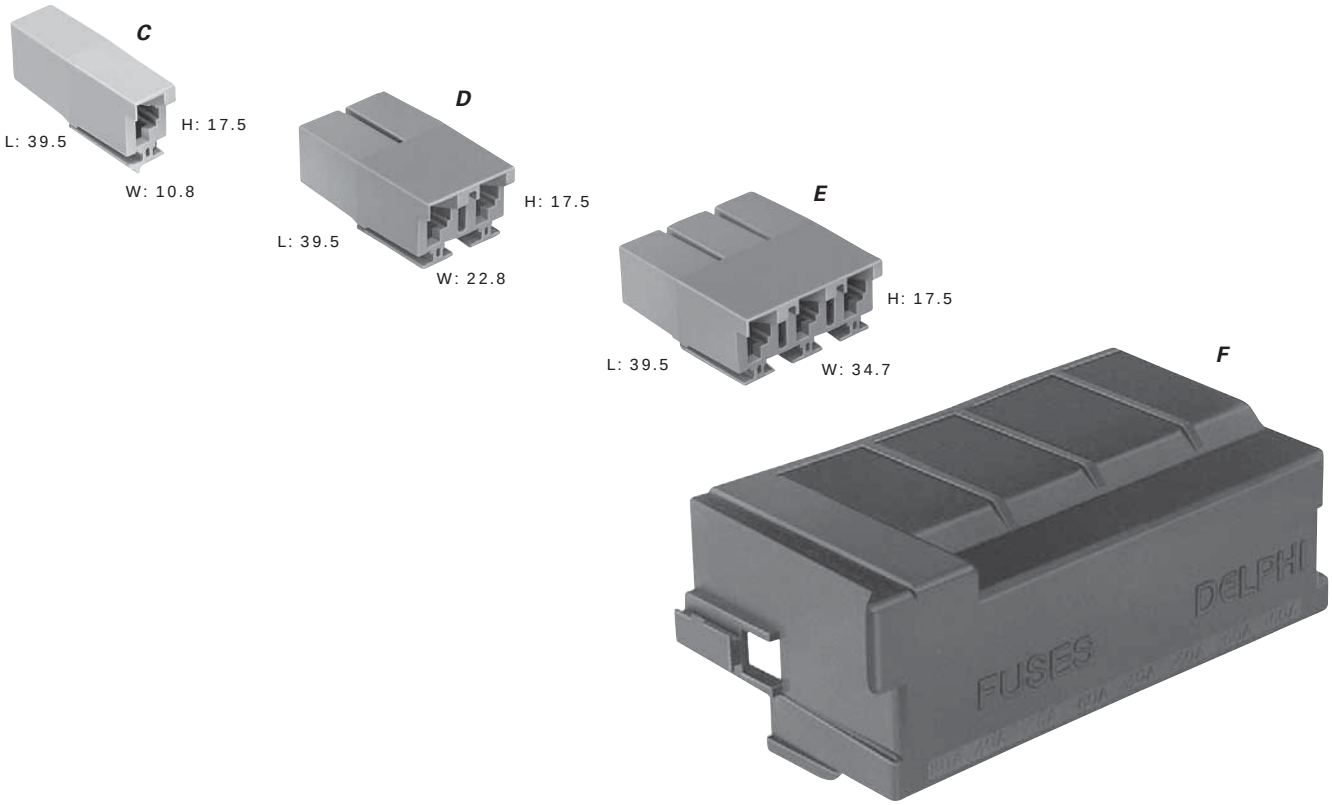

NOTE: Specifications in this catalog are for general reference only and are subject to change without notice. To verify product information, please contact a Delphi representative.

Peters de Laet
503-661-5088 – phone 503-661-5328 – fax
www.pdel.com

Device Connections

TANGLESS

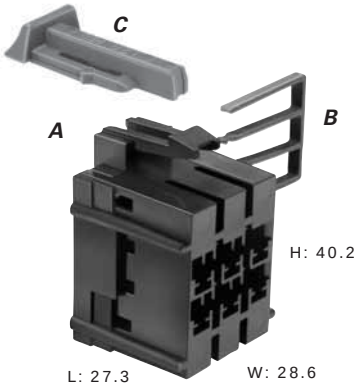

A. Part No: 12110541† (Black)
12129715† (Md. Gray)

Description:	280 Metri-Pack Connector 6F
Size:	27.3L x 40.2H x 28.6W
Material:	PA66 HS IM
Terminals:	See Page 7.5, 280 Metri-Pack Tangless
Application:	Relay

B. Part No: 12110542

Description:	Secondary Lock
Color:	Md. Gray
Material:	PA66 HS IM

C. Part No: 12052834

Description:	CPA
Color:	Green
Material:	PP

† Do not use thin stock female terminals with 1.0mm^2 or larger cable.

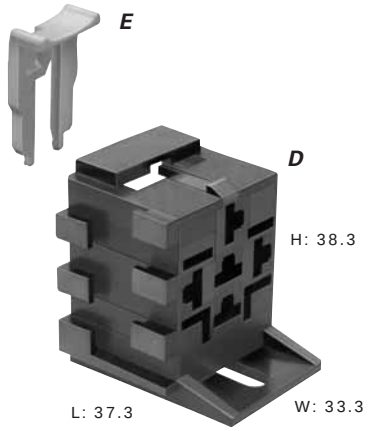

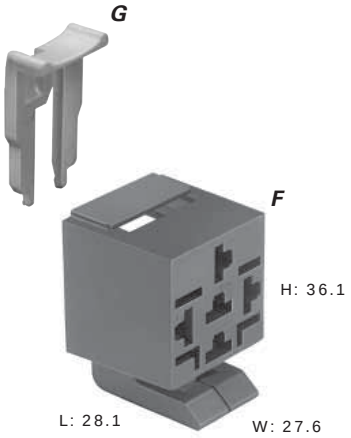

D. Part No: 12033871

Description:	630 Metri-Pack Connector 5F
Size:	37.3L x 38.3H x 33.3W
Color:	Black
Material:	PA6
Terminals:	See Page 7.5, 630 Metri-Pack Relay Series
Application:	Relay (ISO)
Note:	Interlocking multiple connectors form a Relay module.

E. Part No: 12033872

Description:	TPA
Color:	Natural
Material:	PA6

F. Part No: 12034003

Description:	630 Metri-Pack Connector 5F
Size:	28.1L x 36.1H x 27.6W
Color:	Black
Material:	PA6
Terminals:	See Page 7.5, 630 Metri-Pack Relay Series
Application:	Relay (ISO)

G. Part No: 12033872

Description:	TPA
Color:	Natural
Material:	PA6

NOTE: Specifications in this catalog are for general reference only and are subject to change without notice. To verify product information, please contact a Delphi representative.

Peters de Laet
503-661-5088 – phone 503-661-5328 – fax
www.pdel.com

Device Connections

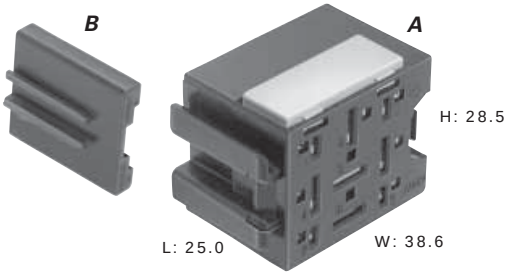

A. Part No: 12131317

Description:	280/630 Metri-Pack Mixed Connector 9F
Size:	25.0L x 28.5H x 38.6W
Color:	Black
Material:	PA6 15% GF
Terminals:	See Page 7.5, 630 Metri-Pack, 280 MP Relay Series
Application:	Standard Relay Socket

B. Part No: 10719968 (Optional)

Description:	Clip Adapter
Color:	Black
Material:	PA6

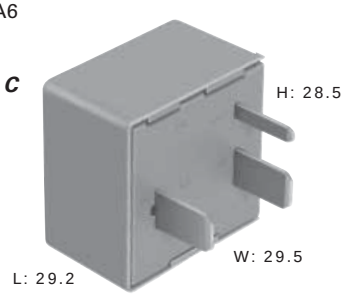

C. Part No: 10740407 (Gray)
10719332 (Blue)
10740408 (Brown)
10740410 (Black)

Description:	Standard Bridging Relay
Size:	29.2L x 28.5H x 29.5W
Blade Size:	2.8, 6.3mm
Material:	PA6 15% GF

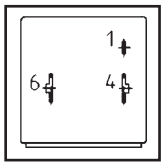

10740407

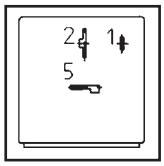

10719332

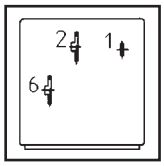

10740408

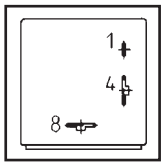

10740410

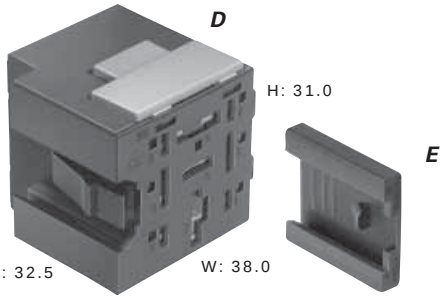

D. Part No: 12162998

Description:	280/630 M/P 9.5 Faston Connector Assembly 9F
Size:	32.5L x 31.0H x 38.0W
Color:	Black
Material:	PA6 15% GF
Terminals:	See Page 7.5, 630 Metri-Pack, 280 MP Relay Series
Application:	Power Relay Socket

E. Part No: 10719968 (Optional)

Description:	Clip Adapter
Color:	Black
Material:	PA6

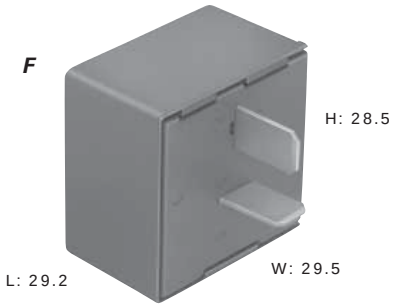

F. Part No: 10740409 (Green)

Description:	Power Bridging Relay
Size:	29.2L x 28.5H x 29.5W
Blade Size:	9.5mm
Material:	PA6 15% GF

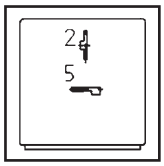

10720098

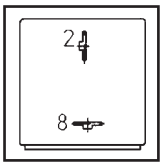

10740409

NOTE: Specifications in this catalog are for general reference only and are subject to change without notice. To verify product information, please contact a Delphi representative.

Peters de Laet
503-661-5088 – phone 503-661-5328 – fax
www.pdel.com

Device Connections

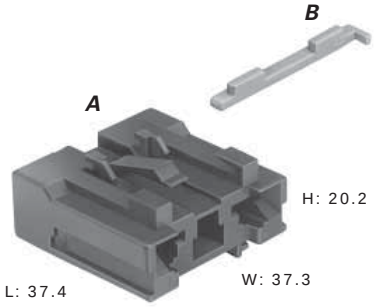

A. Part No: 12110057

Description:	800 MAXI™ Fuse Connector 2F
Size:	37.4L x 20.2H x 37.3W
Color:	Black
Material:	PA66
Terminals:	See Page 7.6, 800 MAXI™ Fuse
Application:	1 MAXI™ Fuse
Note:	Interlocking multiple connectors form a MAXI Fuse module.

B. Part No: 12110058

Description:	Secondary Lock
Color:	Yellow
Material:	PA66

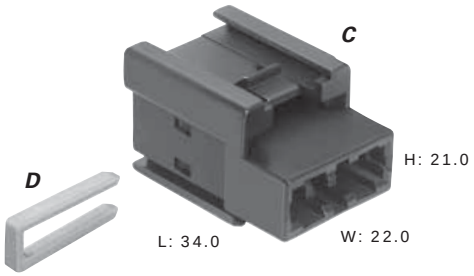

C. Part No: 12147079

Description:	ATO® Fuse Connector 2F
Size:	34.0L x 21.0H x 22.0W
Color:	Black
Material:	PA6
Terminals:	See Page 7.7, 800 MAXI™ Fuse,
Application:	1 ATO® Fuse

D. Part No: 12131359

Description:	Secondary Lock
Color:	Yellow
Material:	PA66 25% GF

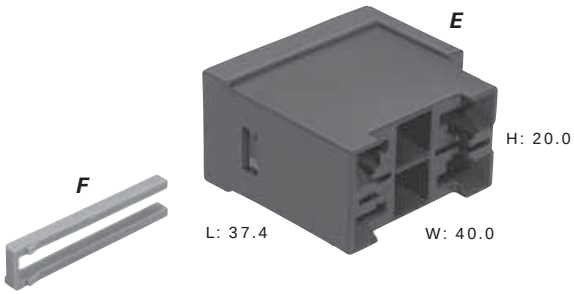

E. Part No: 15339818

Description:	800 MAXI™ Fuse Connector 4F
Size:	37.4L x 22.0H x 40.0W
Color:	Black
Material:	PA66
Terminals:	See Page 7.6, 800 MAXI™ Fuse
Application:	2 MAXI™ Fuses

F. Part No: 15337249

Description:	Secondary Lock
Color:	Gray
Material:	PA6 30% GF

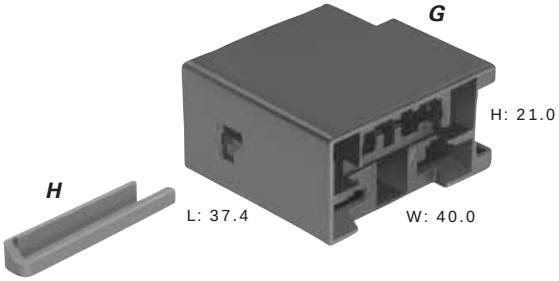

G. Part No: 12158100

Description:	MAXI™/ATO Fuse Connector 4F
Size:	37.4L x 21.0H x 40.0W
Color:	Black
Material:	PA66
Terminals:	See Page 7.7, 800 MAXI™ Fuse,
Application:	1 MAXI™ Fuse, 1 ATO Fuse

H. Part No: 12158101

Description:	Secondary Lock
Color:	Gray
Material:	PA6 30% GF

NOTE: Specifications in this catalog are for general reference only and are subject to change without notice. To verify product information, please contact a Delphi representative.

Peters de Laet
503-661-5088 – phone 503-661-5328 – fax
www.pdel.com

Device Connections

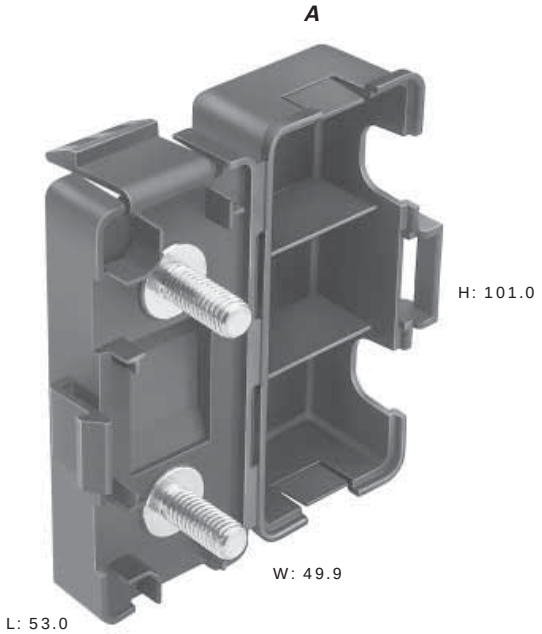

A. Part No: 15492654

Description:	Connector (MEGA® Fuse)
Size:	53.0L x 101.0H x 49.9W
Color:	Black
Material:	PP IM
Terminals:	See Page 7.6, M8 Ring
Application:	1 MEGA® Fuse (100 - 200 AMPS)
Note:	Bolt thread size M8 x 1.25.

NOTE: Specifications in this catalog are for general reference only and are subject to change without notice. To verify product information, please contact a Delphi representative.

Peters de Laet
503-661-5088 – phone 503-661-5328 – fax
www.pdel.com

Device Connections

TANGLESS

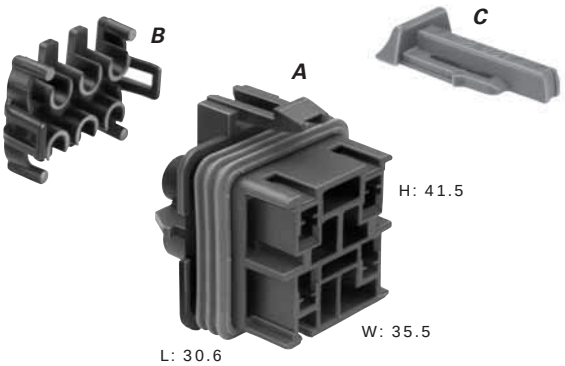

A. Part No: 12129716†

Description:	280 Metri-Pack Connector Assembly 4F
Size:	30.6L x 41.5H x 35.5W
Color:	Md. Gray
Material:	PA66 HS IM
Terminals:	See Page 7.7, 280 Metri-Pack Tangless Sealed
Seals/Plugs:	See Page 7.7
Application:	Relay

B. Part No: 12110540

Description:	TPA
Color:	Dk. Green
Material:	PA6

C. Part No: 12052834

Description:	CPA
Color:	Green
Material:	PP

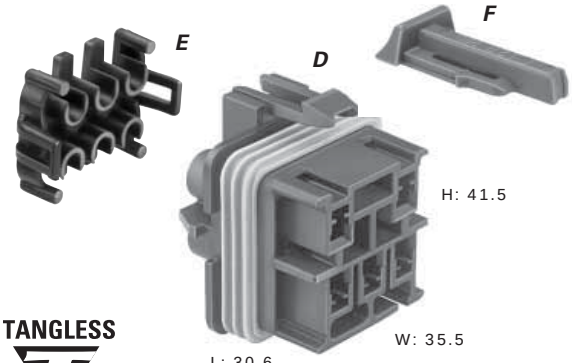

TANGLESS

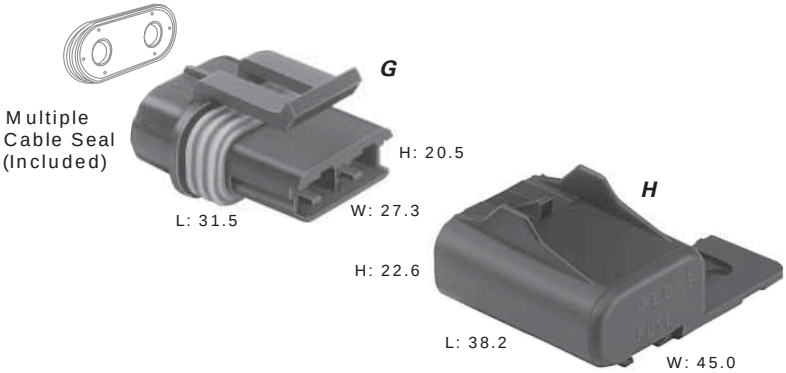

D. Part No: 12110539†

Description:	280 Metri-Pack Connector Assembly 5F
Size:	30.6L x 41.5H x 35.5W
Color:	Black
Material:	PA66 HS IM
Terminals:	See Page 7.7, 280 Metri-Pack Tangless Sealed
Seals/Plugs:	See Page 7.7
Application:	Relay

E. Part No: 12110540

Description:	TPA
Color:	Dk. Green
Material:	PA6

F. Part No: 12052834

Description:	CPA
Color:	Green
Material:	PP

† Do not use thin stock female terminals with 1.0mm^2 or larger cable.

G. Part No: 12085030 (Black/Lt. Orange Seal)
4.48-3.72 Cable O.D.
12033769 (Black/Green Seal)
3.65-2.89 Cable O.D.
12103172 (Gray/Green Seal)
3.65-2.89 Cable O.D.
12066681 (Black/Lt. Gray Seal)
2.64-1.90 Cable O.D.

Description:	630 Pull-To-Seat Connector Assembly 2F
Size:	31.5L x 20.5H x 27.3W
Material:	PA66 HS IM
Terminals:	See Page 7.7, 630 Metri-Pack Pull-To-Seat
Application:	1 ATO® Fuse

H. Part No: 12033731 (Black)
12146104 (Red)
12059426 (Black—Dual)

Description:	Cover
Size:	38.2L x 22.6H x 45.0W
Size (Dual):	38.2L x 23.5H x 56.3W
Material:	PA66 HS IM

NOTE: Specifications in this catalog are for general reference only and are subject to change without notice. To verify product information, please contact a Delphi representative.

Peters de Laet
503-661-5088 – phone 503-661-5328 – fax
www.pdel.com

Device Connections

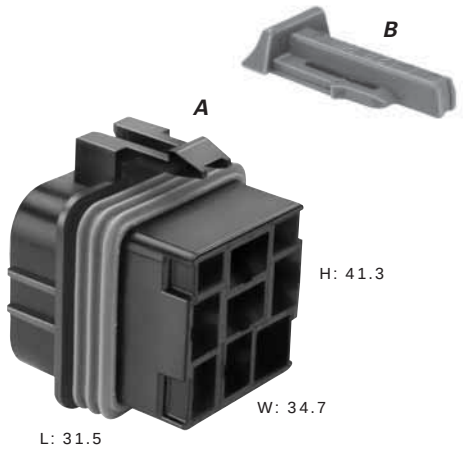

A. Part No: 12092605
12065686
12065685

Description:	630 Pull-to-Seat Connector Assembly
Size:	31.5L x 41.3H x 34.7W
Color:	Black
Material:	PA6
Terminals:	See Page 7.7, 630 Metri-Pack Pull-to-Seat
Plugs:	See Page 7.7
Application:	Relay (ISO)

B. Part No: 12052834

Description:	CPA
Color:	Green
Material:	PP

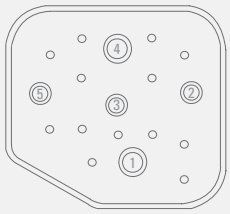

Multiple Cavity Cable Seal (Included)

Cable O.D. (mm)

Conn. Asm. Part Number	Cable Seal Color	Cavity 1	Cavity 2	Cavity 3	Cavity 4	Cavity 5
12092605	Orange	1.60-2.12	1.60-2.12	1.60-2.12	Blocked	1.60-2.12
12065686	Lt. Gray	3.49-3.88	2.03-2.44	Blocked	3.49-3.88	2.03-2.44
12065685	Green	3.49-3.88	2.03-2.44	2.03-2.44	3.49-3.88	2.03-2.44

NOTE: Specifications in this catalog are for general reference only and are subject to change without notice. To verify product information, please contact a Delphi representative.

Peters de Laet
503-661-5088 – phone 503-661-5328 – fax
www.pdel.com

Peters de Laet
503-661-5088 – phone 503-661-5328 – fax
www.pdel.com

Temperature Sensors

Delphi's growing line of temperature sensors is a perfect integration of product and process technologies. Our crimpless conductive path design enables automatic processing for efficient, cost-effective sensor manufacturing.

Capable of matching any calibration criteria, these reliable and durable sensors can be packaged into customer systems worldwide. These products can be promptly brought to market, utilizing Delphi's global network of engineering and manufacturing locations.

Our sensor product line offers a variety of designs for various sensing applications. In addition, we are currently developing humidity sensor products for EMS and HVAC applications including intake air humidity measurement, cabin air relative humidity, and integrated dew point and glass temperature for use in fog predication algorithms.

Temperature Sensor Features

- Rugged housing design
- Customized electrical and mechanical mounting
- Design flexibility
- Few components, cost effective

Peters de Laet
503-661-5088 – phone 503-661-5328 – fax
www.pdel.com

Air

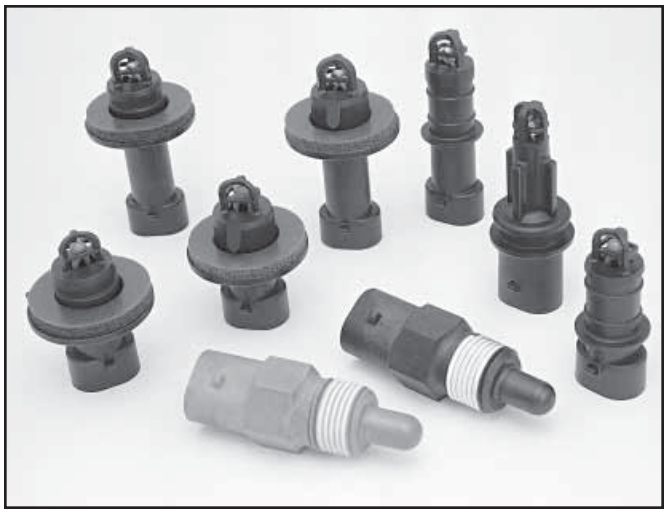

Description

Air temperature sensors are continuous function devices that change resistance inversely proportional to temperature. These sensors consist of two major components: the high temperature thermoplastic shell and a thermistor pre-mold sub-assembly. The plastic shell is custom designed to meet specific mounting and packaging requirements. Containing an NTC thermistor, the patented pre-mold assembly is inserted into the shell.

Typical Application

The air sensors measure the engine intake air temperature in the manifold, in the intake air duct, and in the air cleaner. They provide a signal to the Powertrain Control Module (PCM).

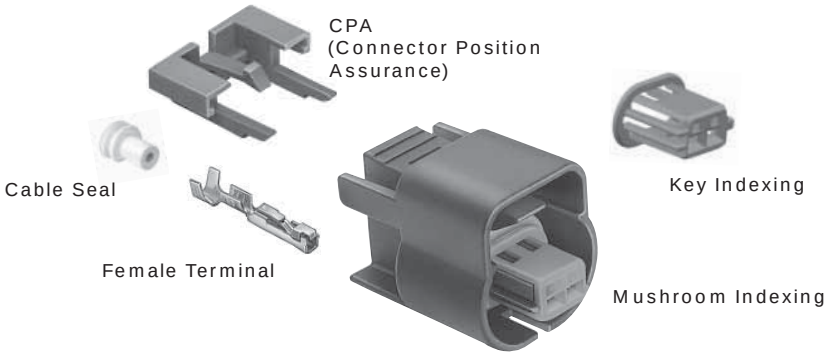

Female GT Connector Assembly

Sensor Assembly

150 GT Connector Assemblies Sealed

Cavities	Connector Part #	Cover/Indexing	Color	Material
2	15336004	Shrouded/Mushroom	Black	PA6 10% GF & 20% GB
2	15335987	Shrouded/Key	Black	PA6 10% GF & 20% GB
2	15449028	Unshrouded/Mushroom	Black	PBT 20% GF

Mating options, 150.2 Metri-Pack Pull-to-Seat Connectors: 12162193, 12162194, 12162195, 12162197, 12162198, 12162199.

Air Temperature Sensors

Cavity Indexing	Air Temp. Sensor	Color	Material
Mushroom	12110446	Black	PEI 30% GF
Key	12146830	Gray	PEI 30% GF
Key	12129596	Black	PA66 HS 33% GF
Key	12160244	Black	PBT 30% GF
Key	12160245	Black	PBT 30% GF
Key	12160246	Black	PBT 30% GF

150 GT Female Terminals Sealed

Part #	Cable Range (mm^2)	Material	Plating
15326266	0.50-0.35	Tin Brass	Tin
15326267	1.00*-0.75	Tin Brass	Tin

*Accommodates 1.00 European Ultra Thin Wall Cable.
Accommodates 0.80 SAE Ultra Thin Wall Cable.

GT Cable Seals

Reel Part #	Loose Part #	Cable Dia.	Material	Color
12191155	15366022	1.47-1.85	Silicone	Green
–	15305351	1.70-2.10	Silicone	Yellow

NOTE: Specifications in this catalog are for general reference only and are subject to change without notice. To verify product information, please contact a Delphi representative.

Peters de Laet
503-661-5088 – phone 503-661-5328 – fax
www.pdel.com

Air

Chart A

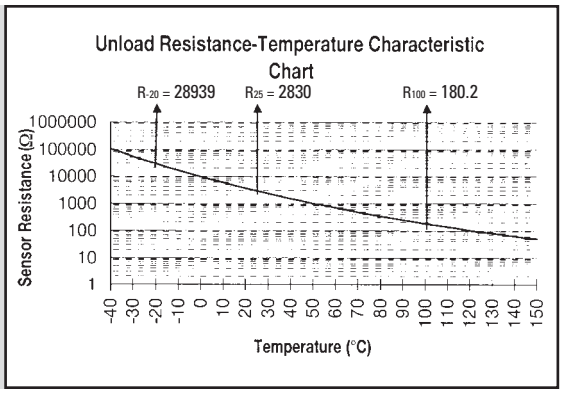

Chart B

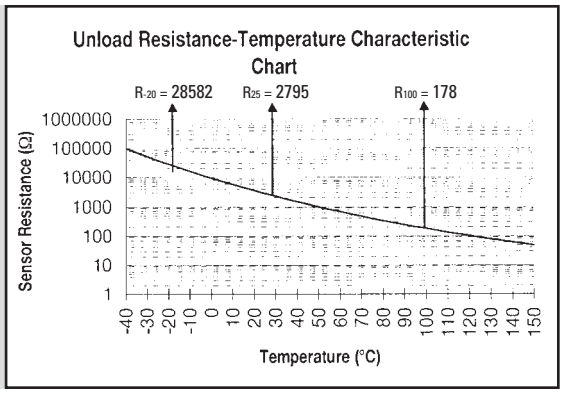

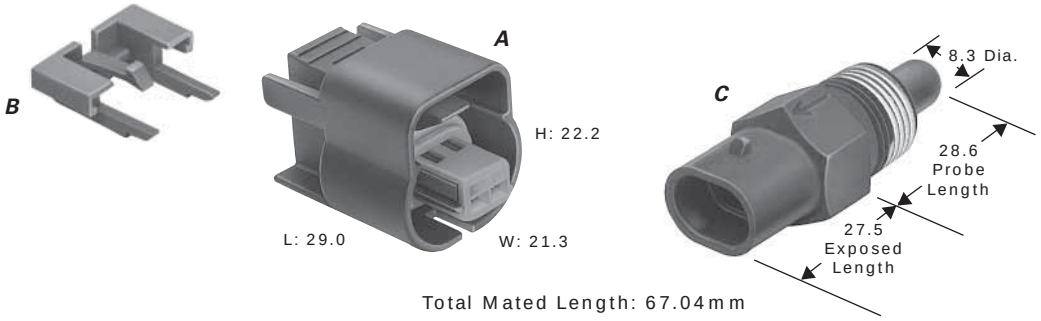

A. Part No: 15336004 (Shrouded)

Material:	PA6 10% GF & 20% GB
	15449028 (Unshrouded)
Material:	PBT 20% GF
Description:	150 GT Connector Assembly 2F
Size:	29.0L x 22.2H x 21.3W
Color:	Black
Terminals:	See Page 8.2
Seals:	See Page 8.2
Mating Opt:	150.2 Metri-Pack Pull-To-Seat Connectors: 12162193, 12162194, 12162195

B. Part No: 15317832

Description:	CPA
Color:	Gray
Material:	PA6 10% GF & 20% GB

C. Part No: 12110446

Description:	Sensor Assembly 2M
Color:	Black
Material:	PEI 30% GF
Weight:	13.2g
Mounting Thread Size:	3/8″ - 18 NPTF

Thermal & Electrical Properties	
Typical Voltage Supply:	5V dc
Operating Temperature:	-40˚C to 135˚C
Resistive Range (Ω):	See Chart A
Dissipation Constant:	18mW/˚C
Thermal Time Constant:	60 seconds
Accuracy:	See Chart A

NOTE: Specifications in this catalog are for general reference only and are subject to change without notice. To verify product information, please contact a Delphi representative.

Peters de Laet
503-661-5088 – phone 503-661-5328 – fax
www.pdel.com

Air

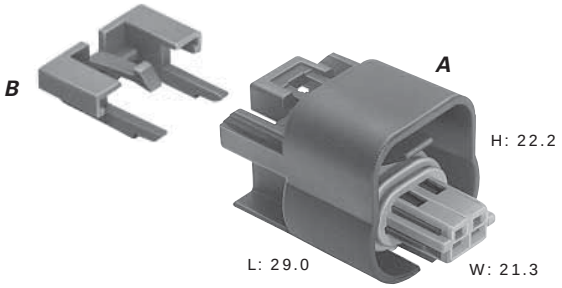

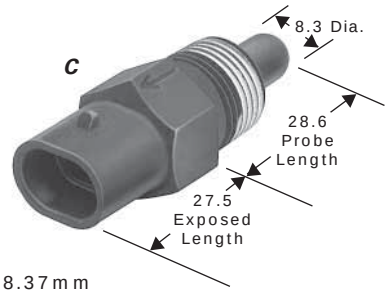

Total Mated Length: 68.37mm

A. Part No: 15335987

Description:	150 GT Connector Assembly 2F
Size:	29.0L x 22.2H x 21.3W
Color:	Black
Material:	PA6 10% GF & 20% GB
Terminals:	See Page 8.2
Seals:	See Page 8.2
Mating Opt:	150.2 Metri-Pack Pull-To-Seat Connectors 12162197, 12162198, 12162199

B. Part No: 15317832

Description:	CPA
Color:	Gray
Material:	PA6 10% GF & 20% GB

C. Part No: 12146830

Description:	Sensor Assembly 2M
Color:	Gray
Material:	PEI 30% GF
Weight:	13.8g
Mounting Thread Size:	3/8" - 18 NPTF

Thermal & Electrical Properties

Typical Voltage Supply:	5V DC
Operating Temperature:	-40˚C to 135˚C
Resistive Range (Ω):	See Chart A
Dissipation Constant:	18mW/˚C
Thermal Time Constant:	60 seconds
Accuracy:	See Chart A

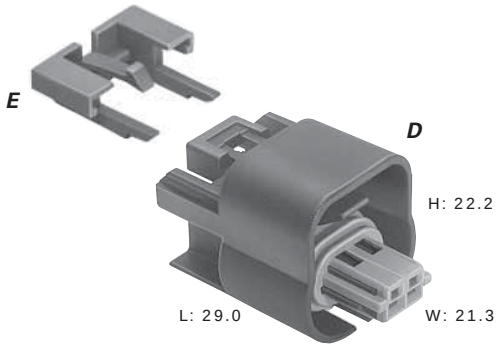

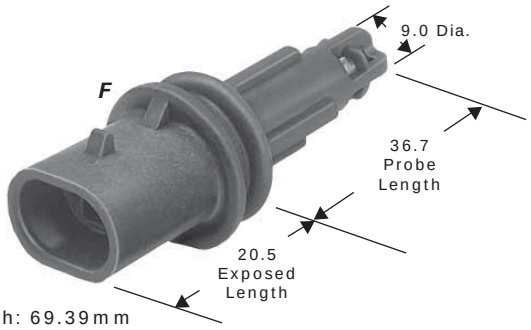

Total Mated Length: 69.39mm

D. Part No: 15335987

Description:	150 GT Connector Assembly 2F
Size:	29.0L x 22.2H x 21.3W
Color:	Black
Material:	PA6 10% GF & 20% GB
Terminals:	See Page 8.2
Seals:	See Page 8.2
Mating Opt:	150.2 Metri-Pack Pull-To-Seat Connectors 12162197, 12162198, 12162199

E. Part No: 15317832

Description:	CPA
Color:	Gray
Material:	PA6 10% GF & 20% GB

F. Part No: 12129596

Description:	Sensor Assembly 2M
Color:	Black
Material:	PA66 HS 33% GF
Weight:	8.2g
Mounting:	Push

Thermal & Electrical Properties

Typical Voltage Supply:	5V dc
Operating Temperature:	-40˚C to 135˚C
Resistive Range (Ω):	See Chart A
Dissipation Constant:	12mW/˚C
Thermal Time Constant:	<15 seconds
Accuracy:	See Chart A

NOTE: Specifications in this catalog are for general reference only and are subject to change without notice. To verify product information, please contact a Delphi representative.

Peters de Laet
503-661-5088 – phone 503-661-5328 – fax
www.pdel.com

Air

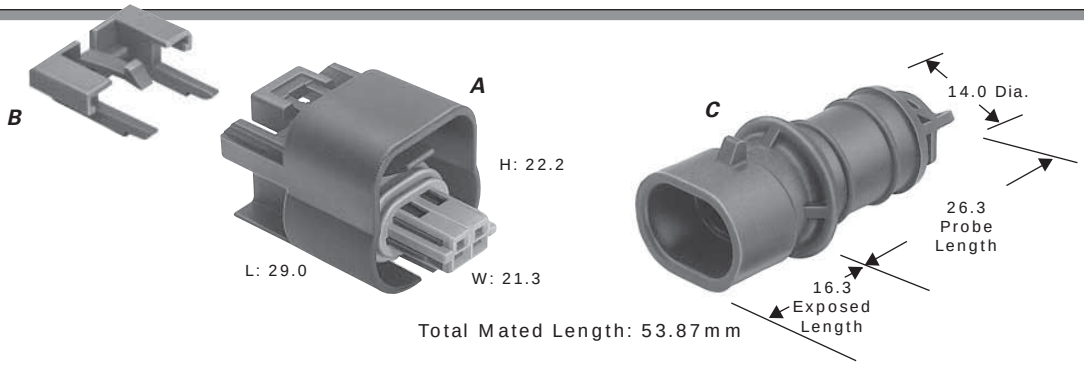

A. Part No: 15335987

Description:	150 GT Connector Assembly 2F
Size:	29.0L x 22.2H x 21.3W
Color:	Black
Material:	PA6 10% GF & 20% GB
Terminals:	See Page 8.2
Seals:	See Page 8.2
Mating Opt:	150.2 Metri-Pack Pull-To-Seat Connectors 12162197, 12162198, 12162199

B. Part No: 15317832

Description:	CPA
Color:	Gray
Material:	PA6 10% GF & 20% GB

C. Part No: 12160244

Description:	Sensor Assembly 2M
Color:	Black
Material:	PBT 30% GF
Weight:	5.5g
Mounting:	Push

Thermal & Electrical Properties	
Typical Voltage Supply:	5V dc
Operating Temperature:	-40˚C to 135˚C
Resistive Range (Ω):	See Chart B
Dissipation Constant:	9mW/˚C
Thermal Time Constant:	<15 seconds
Accuracy:	See Chart B

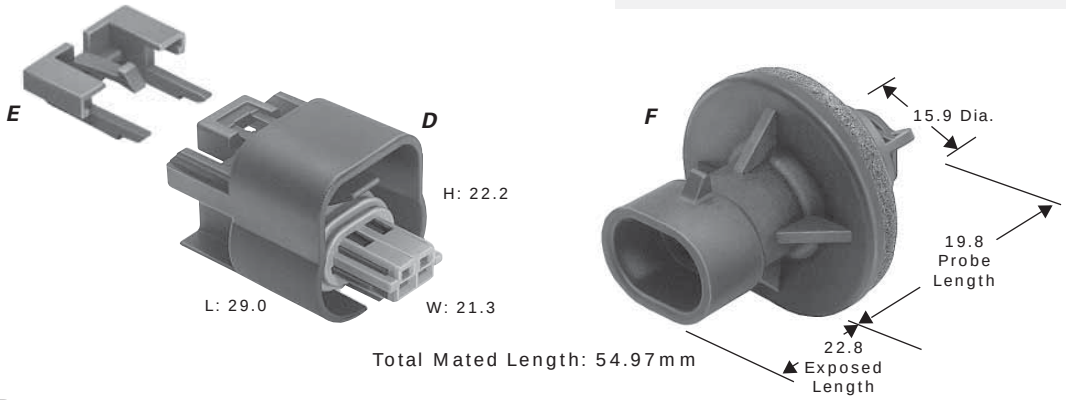

D. Part No: 15335987

Description:	150 GT Connector Assembly 2F
Size:	29.0L x 22.2H x 21.3W
Color:	Black
Material:	PA6 10% GF & 20% GB
Terminals:	See Page 8.2
Seals:	See Page 8.2
Mating Opt:	150.2 Metri-Pack Pull-To-Seat Connectors 12162197, 12162198, 12162199

E. Part No: 15317832

Description:	CPA
Color:	Gray
Material:	PA6 10% GF & 20% GB

F. Part No: 12160245

Description:	Sensor Assembly 2M
Color:	Black
Material:	PBT 30% GF
Weight:	8.9g
Mounting:	Clip

Thermal & Electrical Properties	
Typical Voltage Supply:	5V dc
Operating Temperature:	-40˚C to 135˚C
Resistive Range (Ω):	See Chart B
Dissipation Constant:	9mW/˚C
Thermal Time Constant:	<15 seconds
Accuracy:	See Chart B

NOTE: Specifications in this catalog are for general reference only and are subject to change without notice. To verify product information, please contact a Delphi representative.

Peters de Laet
503-661-5088 – phone 503-661-5328 – fax
www.pdel.com

Air

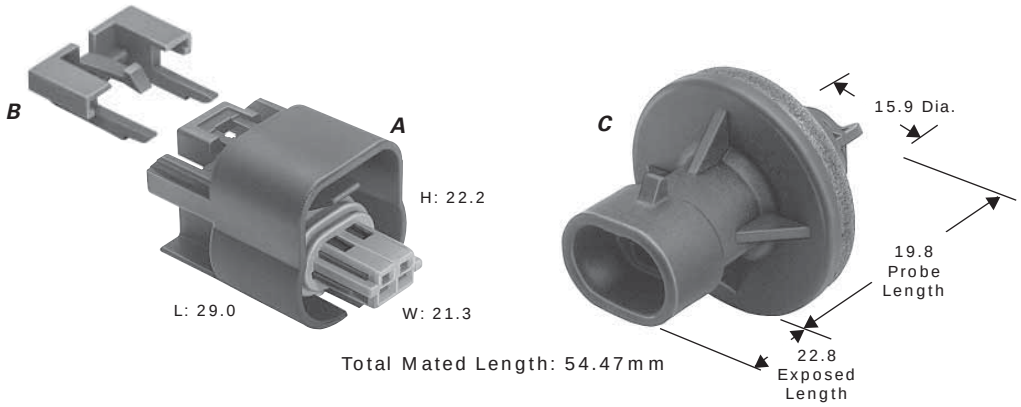

A. Part No: 15335987

Description:	150 GT Connector Assembly 2F
Size:	29.0L x 22.2H x 21.3W
Color:	Black
Material:	PA6 10% GF & 20% GB
Terminals:	See Page 8.2
Seals:	See Page 8.2
Mating Opt:	150.2 Metri-Pack Pull-To-Seat Connectors 12162197, 12162198, 12162199

B. Part No: 15317832

Description:	CPA
Color:	Gray
Material:	PA6 10% GF & 20% GB

C. Part No: 12160246

Description:	Sensor Assembly 2M
Color:	Black
Material:	PBT 30% GF
Weight:	9.3g
Mounting:	Twist Lock

Thermal & Electrical Properties

Typical voltage supply:	5V dc
Operating temperature:	-40˚C to 135˚C
Resistive range (Ω):	See Chart B
Dissipation constant:	9mW/˚C
Thermal time constant:	<15 seconds
Accuracy:	See Chart B

NOTE: Specifications in this catalog are for general reference only and are subject to change without notice. To verify product information, please contact a Delphi representative.

Peters de Laet
503-661-5088 – phone 503-661-5328 – fax
www.pdel.com

HVAC Air

Description

The Heating Ventilation Air Conditioning temperature sensor is a continuous function device that changes resistance inversely proportional to temperature. The discharge air sensor consists of an NTC thermistor with a crimpless conductive path protected by a plastic body.

Typical Application

The discharge air sensor measures the inside air temperature and provides a signal to the automatic climate control unit.

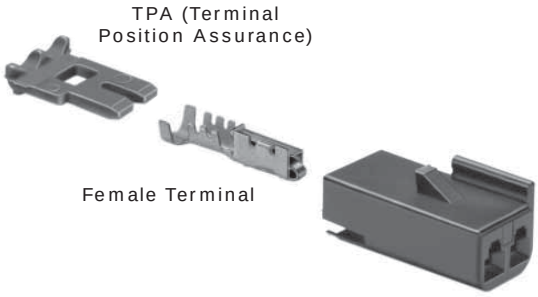

Female Metri-Pack Connector

Sensor Assembly

150 Metri-Pack Female Connector Unsealed

Cavities	Part #	Color	Material	TPA
2	12047662	Black	PA66 HS IM	15324070

HVAC Temperature Sensor

HVAC Temperature Sensor	Color	Material
12160947	Black	PA66 HS IM

150 Metri-Pack Female Terminals Unsealed

Part #	Cable Range (mm²)	Material	Plating
12047767	1.0-0.80	Silicon Bronze	Tin
12064971	0.50-0.35	Silicon Bronze	Tin

NOTE: Specifications in this catalog are for general reference only and are subject to change without notice. To verify product information, please contact a Delphi representative.

Peters de Laet
503-661-5088 – phone 503-661-5328 – fax
www.pdel.com

HVAC Air

Chart B

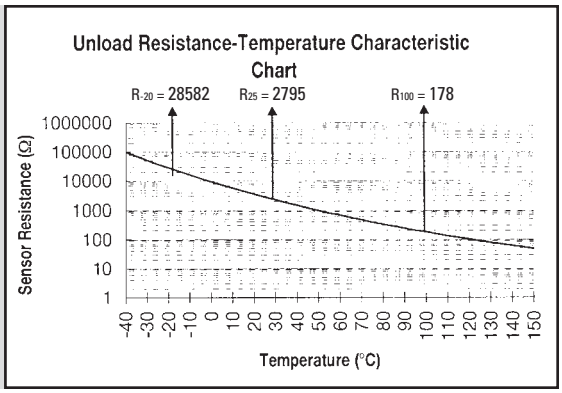

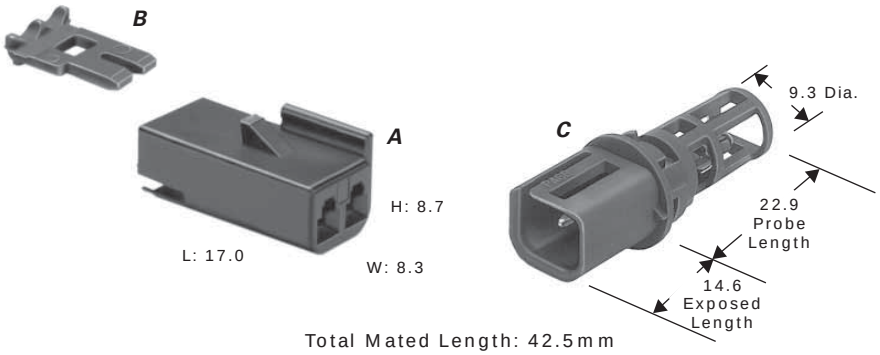

A. Part No: 12047662 (Black) 12059249 (Cream)

Description:	150 Metri-Pack Connector 2F
Size:	17.0L x 8.7H x 8.3W
Material:	PA66 HS IM
Terminals:	See Page 8.7

B. Part No: 15324070

Description:	TPA
Color:	Lt. Gray
Material:	PA66 HS IM

C. Part No: 12160947

Description:	Sensor Assembly 2M
Color:	Black
Material:	PA66 HS IM
Weight:	2.2g
Mounting:	Twist Lock

Thermal & Electrical Properties	
Typical voltage supply:	5V dc
Operating temperature:	-40˚C to 125˚C
Resistive range (Ω):	See Chart B
Dissipation constant:	9mW/˚C
Thermal time constant:	8 seconds
Accuracy:	See Chart B

NOTE: Specifications in this catalog are for general reference only and are subject to change without notice. To verify product information, please contact a Delphi representative.

Peters de Laet
503-661-5088 – phone 503-661-5328 – fax
www.pdel.com

Coolant/Fluid

Description

Coolant/Fluid temperature sensors are continuous function devices that change resistance inversely proportional to temperature. These brass sensors consist of five major components: the brass shell, thermal grease, insulating sleeve, gasket, and insert molded connector. The shell utilizes customized thread and hex sizes per application requirements and the connector contains an NTC thermistor with a crimpless conductive path.

Typical Application

The brass sensors measure the temperature of the engine oil, the fuel or the engine coolant and provide a signal to the Powertrain Control Module (PCM).

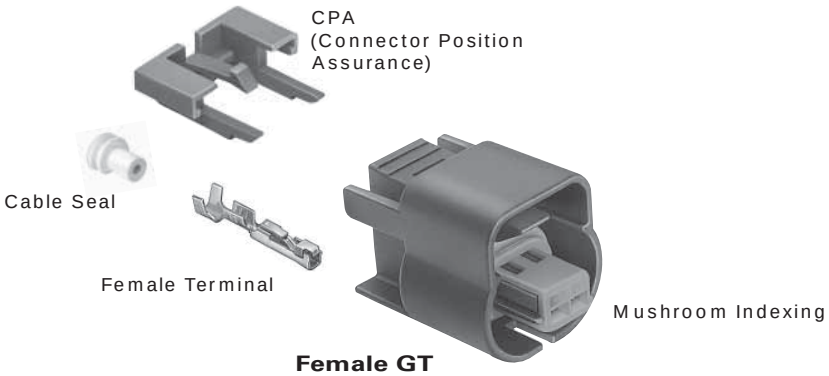

Female GT Connector Assembly

Sensor Assembly

150 GT Connector Assemblies Sealed

Cavities	Connector Part #	Cover/Indexing	Color	Material
2	15336004	Shrouded/Mushroom	Black	PA6 10% GF & 20% GB
2	15449028	Unshrouded/Mushroom	Black	PBT 20% GF

Mating options, 150.2 Metri-Pack Pull-to-Seat Connectors: 12162193, 12162194, 12162195

Coolant/Fluid Sensors

Cavity Indexing	Coolant/Fluid Sensors	Color	Material	
			Housing	Connector
Mushroom	15326386	Black	Brass	PBT 30% GF
Mushroom	12146897	Black	Brass	PBT 30% GF

150 GT Female Terminals Sealed

Part #	Cable Range (mm²)	Material	Plating
15326266	0.50-0.35	Tin Brass	Tin
15326267	1.00*-0.75	Tin Brass	Tin

*Accommodates 1.00 European Ultra Thin Wall Cable.
Accommodates 0.80 SAE Ultra Thin Wall Cable.

GT Cable Seals

Reel Part #	Loose Part #	Cable Dia.	Material	Color
12191155	15366022	1.47-1.85	Silicone	Green
–	15305351	1.70-2.10	Silicone	Yellow

NOTE: Specifications in this catalog are for general reference only and are subject to change without notice. To verify product information, please contact a Delphi representative.

Peters de Laet
503-661-5088 – phone 503-661-5328 – fax
www.pdel.com

Coolant/Fluid

Chart A

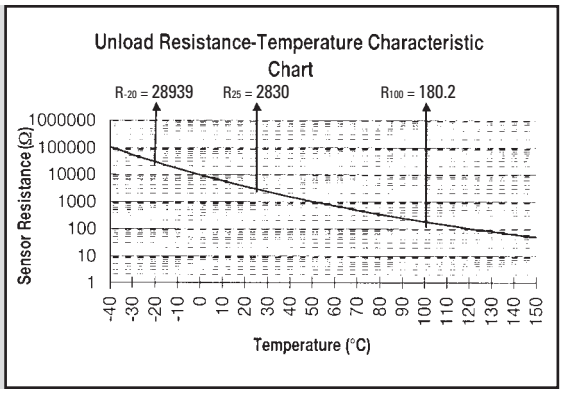

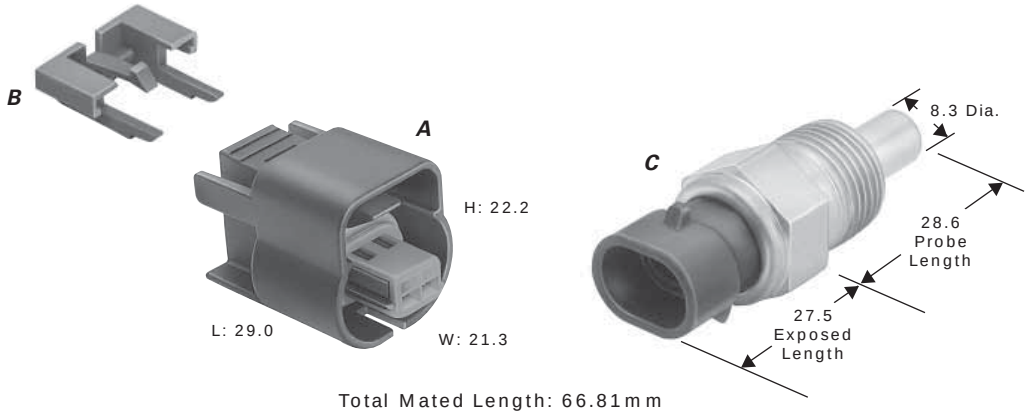

Total Mated Length: 66.81mm

A. Part No: 15336004 (Shrouded)

Material:	PA6 10% GF & 20% GB
	15449028 (Unshrouded)
Material:	PBT 20% GF
Description:	150 GT Connector Assembly 2F
Size:	29.0L x 22.2H x 21.3W
Color:	Black
Terminals:	See Page 8.9
Seals:	See Page 8.9
Mating Opt:	150.2 Metri-Pack Pull-To-Seat Connectors 12162193, 12162194, 12162195

B. Part No: 15317832

Description:	CPA
Color:	Gray
Material:	PA6 10% GF & 20% GB

C. Part No: 15326386

Description:	Sensor Assembly 2M
Color:	Black
Material:	Brass Housing; PBT 30% GF Connector
Weight:	39.5g

Mounting Thread Size: 3/8″ - 18 NPTF

Thermal & Electrical Properties	
Typical voltage supply:	5V dc
Operating temperature:	-40˚C to 135˚C
Resistive range (Ω):	See Chart A
Dissipation constant:	25mW/˚C
Thermal time constant:	20 to 30 seconds
Accuracy:	See Chart A

NOTE: Specifications in this catalog are for general reference only and are subject to change without notice. To verify product information, please contact a Delphi representative.

Peters de Laet
503-661-5088 – phone 503-661-5328 – fax
www.pdel.com

Coolant/Fluid

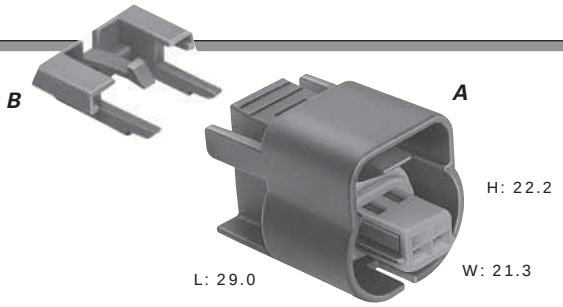

A. Part No: 15336004 (Shrouded)

Material:	PA6 10% GF & 20% GB
	15449028 (Unshrouded)
Material:	PBT 20% GF
Description:	150 GT Connector Assembly 2F
Size:	29.0L x 22.2H x 21.3W
Color:	Black
Terminals:	See Page 8.9
Seals:	See Page 8.9
Mating Opt:	150.2 Metri-Pack Pull-To-Seat Connectors 12162193, 12162194, 12162195

B. Part No: 15317832

Description:	CPA
Color:	Gray
Material:	PA6 10% GF & 20% GB

Thermal & Electrical Properties	
Typical Voltage Supply:	5V dc
Operating Temperature:	-40˚C to 135˚C
Resistive Range ( ):	See Chart A
Dissipation Constant:	25mW/˚C
Thermal Time Constant:	20 to 30 seconds
Accuracy:	See Chart A

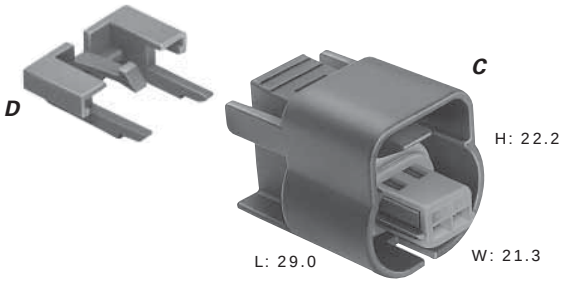

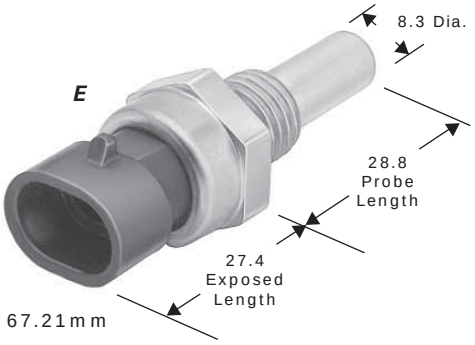

Total Mated Length: 67.21mm

C. Part No: 15336004 (Shrouded)

Material:	PA6 10% GF & 20% GB
	15449028 (Unshrouded)
Material:	PBT 20% GF
Description:	150 GT Connector Assembly 2F
Size:	29.0L x 22.2H x 21.3W
Color:	Black
Terminals:	See Page 8.9
Seals:	See Page 8.9
Mating Opt:	150.2 Metri-Pack Pull-To-Seat Connectors 12162193, 12162194, 12162195

D. Part No: 15317832

Description:	CPA
Color:	Gray
Material:	PA6 10% GF & 20% GB

E. Part No: 12146897

Description:	Sensor Assembly 2M
Color:	Black
Material:	Brass Housing; PBT 30% GF Connector
Weight:	23.2g

Mounting Thread Size: M12 X 1.5

Thermal & Electrical Properties	
Typical Voltage Supply:	5V dc
Operating Temperature:	-40˚C to 135˚C
Resistive Range (Ω):	See Chart A
Dissipation Constant:	25mW/˚C
Thermal Time Constant:	20 to 30 seconds
Accuracy:	See Chart A

NOTE: Specifications in this catalog are for general reference only and are subject to change without notice. To verify product information, please contact a Delphi representative.

Peters de Laet
503-661-5088 – phone 503-661-5328 – fax
www.pdel.com

Transmission

Description

Transmission temperature sensors are continuous function devices that change resistance inversely proportional to temperature. The two primary types of sensors that monitor the automatic transmission fluid are: the metal stator temperature sensor and the plastic sump temperature sensor. The stator sensor consists of a brass or stainless steel shell, thermal grease, insulating sleeve, gasket, and insert-molded connector containing an NTC thermistor. The sump sensor consists of a high temperature plastic shell and a patented pre-mold sub-assembly that contains an NTC thermistor with a crimpless conductive path.

Typical Application

These sensors measure the fluid temperature in two transmission environments: in-line near the stator and the sump tank. A signal is provided to the Powertrain Control Module (PCM).

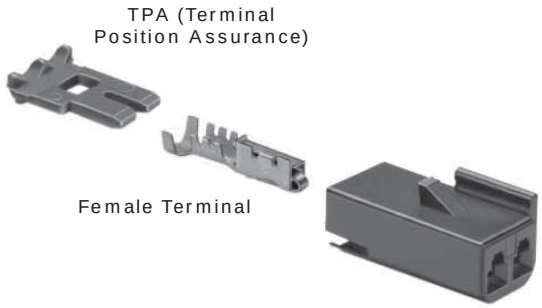

Female Metri-Pack Connector

Sensor Assembly

150 Metri-Pack Female Connector Unsealed

Cavities	Part #	Color	Material	TPA
2	12047662	Black	PA66 HS IM	15324070

Transmission Temperature Sensors

Transmission Temp. Sensors	Color	Material	
		Housing	Connector
12160855	Black	Brass	PA66 HS IM
12129691	Md. Gray	PA66 HS IM	–

150 Metri-Pack Female Terminals Unsealed

Part #	Cable Range (mm²)	Material	Plating
12047767	1.0-0.80	Silicon Bronze	Tin
12064971	0.50-0.35	Silicon Bronze	Tin

NOTE: Specifications in this catalog are for general reference only and are subject to change without notice. To verify product information, please contact a Delphi representative.

Peters de Laet
503-661-5088 – phone 503-661-5328 – fax
www.pdel.com

Transmission

Chart B

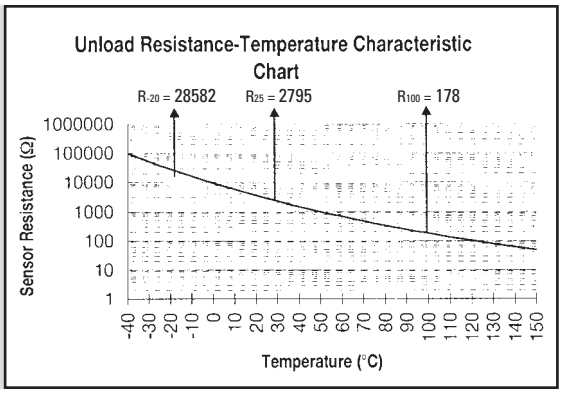

Chart C

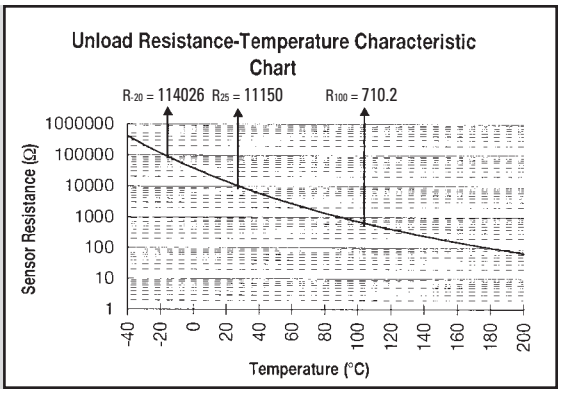

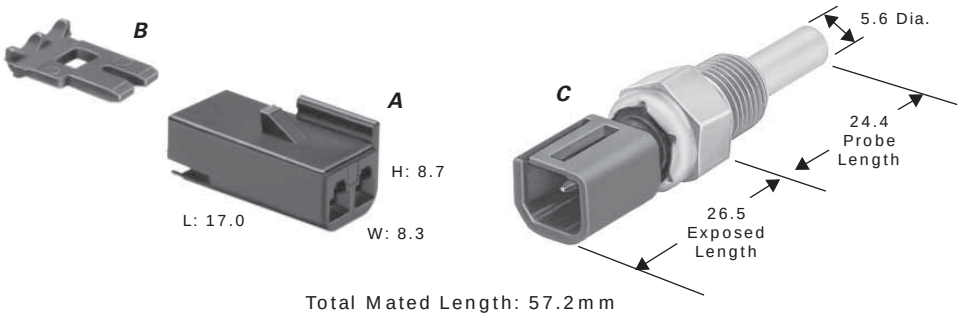

Total Mated Length: 57.2mm

A. Part No: 12047662 (Black)
12059249 (Cream)

Description:	150 Metri-Pack Connector 2F
Size:	17.0L x 8.7H x 8.3W
Material:	PA66 HS IM
Terminals:	See Page 8.12

B. Part No: 15324070

Description:	TPA
Color:	Lt. Gray
Material:	PA66 HS IM

C. Part No: 12160855

Description:	Sensor Assembly 2M
Color:	Black
Material:	Brass Housing; PA66 HS IM Connector
Weight:	12.2g
Mounting Thread Size:	1/8″-27 PTF

Thermal & Electrical Properties	
Typical Voltage Supply:	5V dc
Operating Temperature:	
Sensor Tip:	-40˚C to 200˚C
Connector:	-40˚C to 150˚C
Resistive Range (Ω):	See Chart C
Dissipation Constant:	12mW/˚C
Thermal Time Constant:	10 seconds
Accuracy:	See Chart C

NOTE: Specifications in this catalog are for general reference only and are subject to change without notice. To verify product information, please contact a Delphi representative.

Peters de Laet
503-661-5088 – phone 503-661-5328 – fax
www.pdel.com

Transmission

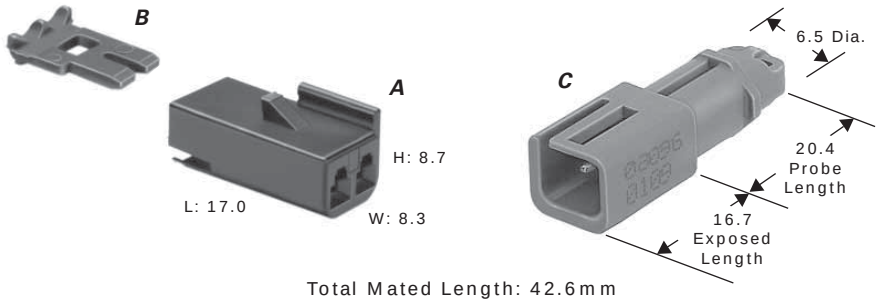

Total Mated Length: 42.6mm

A. Part No: 12047662 (Black) 12059249 (Cream)

Description:	150 Metri-Pack Connector 2F
Size:	17.0L x 8.7H x 8.3W
Material:	PA66 HS IM
Terminals:	See Page 8.12

B. Part No: 15324070

Description:	TPA
Color:	Lt. Gray
Material:	PA66 HS IM

C. Part No: 12129691

Description:	Sensor Assembly 2M
Color:	Md. Gray
Material:	PA66 HS IM
Weight:	2.8g
Mounting:	Clip/Tie

Thermal & Electrical Properties	
Typical voltage supply:	5V dc
Operating temperature:	-40˚C to 135˚C
Resistive range (Ω):	See Chart B
Dissipation constant:	12mW/˚C
Thermal time constant:	5 seconds
Accuracy:	See Chart B

NOTE: Specifications in this catalog are for general reference only and are subject to change without notice. To verify product information, please contact a Delphi representative.

Peters de Laet
503-661-5088 – phone 503-661-5328 – fax
www.pdel.com

Ring Terminals, Battery Terminals, 56 Series, Carriers & Clips

Ring Terminal Features

- Advanced crimp wing design
- Complete selection of English and Metric stud-hole sizes
- Wide variety of locking and orientation features

Battery Terminal Features

- State of the art crimp interface technology
- Designed for all appropriate battery and starter cable gage sizes and cable types
- Battery terminals mate to: side post, top post, or top stud batteries
- Starter terminals have anti-rotation features for ease of installation

56 Series Device Features

- Proven connection systems reliability
- Compatible connection systems to most devices
- State of the art crimp interface technology

Clip Features

- Broad product selection
- Clips attach easily and securely to connectors via mechanical locking design
- Proven anti-rattle design features

Ring Terminals

A wide selection of basic washer style and spade style terminals with design features to accommodate various application requirements. These terminals are designed with both core and insulation crimp wings and employ the same state of the art crimp design features as our entire connection systems family.

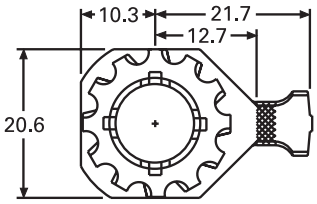

Ring and Washer Terminal Assemblies

Stud Size	Hole Dia.	Cable Range (mm²)	Part #	Material	Plating	Stock Thickness (mm)
M6.3	7.16	8.0	12162932	Brass	Tin	0.81
M6.3	7.16	5.0-3.0	12065449	Brass	Tin	0.81
M6.3	7.16	3.0-2.0	12089263	Brass	Tin	0.81
M6.3	7.16	1.0-0.80	12089496	Brass	Tin	0.81
M6.3	7.16	1.0-0.80 (2 Req'd.)	12103086	Brass	Tin	0.81
M10	10.34	5.0	12084554	Brass	Tin	0.81
M10	10.34	3.0 - 2.0	12089240	Brass	Tin	0.81
M10	10.34	1.0-0.80	12089045	Brass	Tin	0.81
M10	10.34	1.0-0.80 (2 Req'd.)	12084185	Brass	Tin	0.81
M12	12.60	1.0 (2 Req'd.) 1.0-0.80 (2 Req'd.)	12129822	Brass	Tin	0.81

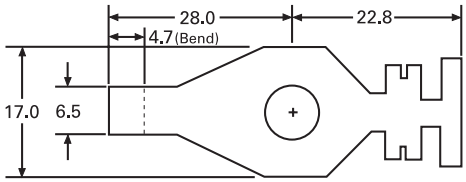

Anti-Rotation Terminals w/90° Tab

Stud Size	Hole Dia.	Cable Range (mm²)	Part #	Material	Plating	Stock Thickness (mm)
M6	6.70	8.0	15354755	Copper Alloy	Tin	0.81
M6	6.70	5.0	15354754	Copper Alloy	Tin	0.81
M6	6.70	3.0-2.0	15354753	Copper Alloy	Tin	0.81
M6	6.70	1.0-0.80	15355521	Copper Alloy	Tin	0.81
M8	8.50	8.0	15354758	Copper Alloy	Tin	0.81
M8	8.50	5.0	15354757	Copper Alloy	Tin	0.81
M8	8.50	3.0-2.0	15354756	Copper Alloy	Tin	0.81
M10	10.60	1.0-0.80	12191057	Copper Alloy	Tin	0.81

Anti-rotation terminals are designed in a straight configuration.
A crimp and bend die is available for terminal application.

NOTE: Specifications in this catalog are for general reference only and are subject to change without notice. To verify product information, please contact a Delphi representative.

Peters de Laet
503-661-5088 – phone 503-661-5328 – fax
www.pdel.com

Ring Terminals

Small Ring Terminals

Stud Size	Hole Dia.	Cable Range (mm²)	Part #	Material	Plating	Stock Thickness (mm)
M4	4.30	5.0	12103518	Copper Alloy	Tin	1.02
M4	4.30	3.0-2.0	12103520	Copper Alloy	Tin	0.81
M5	5.40	5.0	12103517	Copper Alloy	Tin	1.02
M5	5.40	3.0-2.0	12103519	Copper Alloy	Tin	0.81

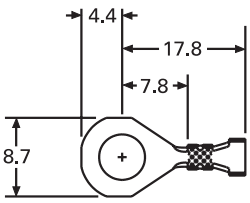

Medium Ring Terminals

Stud Size	Hole Dia.	Cable Range (mm²)	Part #	Material	Plating	Stock Thickness (mm)
M4	4.30	1.0-0.80	12103516	Copper Alloy	Tin	0.65
M5	5.40	1.0-0.80	12103515	Copper Alloy	Tin	0.65
M6	6.70	1.0-0.80	12103514	Copper Alloy	Tin	0.65

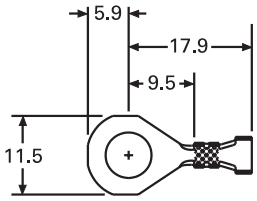

Ring Terminals

Stud Size	Hole Dia.	Cable Range (mm²)	Part #	Material	Plating	Stock Thickness (mm)
M6	6.70	5.0	12103512	Copper Alloy	Tin	1.02
M6	6.70	3.0-2.0	12103513	Copper Alloy	Tin	0.81

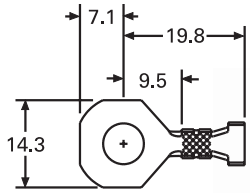

Ring Terminals

Stud Size	Hole Dia.	Cable Range (mm²)	Part #	Material	Plating	Stock Thickness (mm)
M6	6.70	8.0	12103965	Copper Alloy	Tin	1.02
M6	6.70	5.0	12162098	Copper Alloy	Tin	1.02
M6	6.70	3.0-2.0	12162099	Copper Alloy	Tin	0.81
M6	6.70	1.0-0.80	12162100	Copper Alloy	Tin	0.65
M6	6.70	1.0-0.80 (2 Req'd.)	12103511	Copper Alloy	Tin	0.65
M8	8.50	8.0	12103502	Copper Alloy	Tin	1.02
M8	8.50	5.0	12103504	Copper Alloy	Tin	1.02
M8	8.50	3.0-2.0	12103506	Copper Alloy	Tin	0.81
M8	8.50	1.0-0.80	12103508	Copper Alloy	Tin	0.65
M8	8.50	1.0-0.8 (2 Req'd.)	12103510	Copper Alloy	Tin	0.65
M10	10.60	8.0	12103501	Copper Alloy	Tin	1.02
M10	10.60	5.0	12103503	Copper Alloy	Tin	1.02
M10	10.60	3.0-2.0	12103505	Copper Alloy	Tin	0.81
M10	10.60	1.0-0.80	12103507	Copper Alloy	Tin	0.65
M10	10.60	1.0-0.80 (2 Req'd.)	12103509	Copper Alloy	Tin	0.65

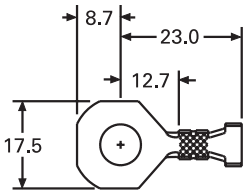

Anti-rotation terminals are designed in a straight configuration.
A crimp and bend die is available for terminal application.

NOTE: Specifications in this catalog are for general reference only and are subject to change without notice. To verify product information, please contact a Delphi representative.

Peters de Laet
503-661-5088 – phone 503-661-5328 – fax
www.pdel.com

Battery / Heavy Duty Terminals

Delphi offers a complete line of top and side mounted battery terminals for all applications. Anti-rotation tabs are included for ease of installation and assembly. Stamped and serrated crimp wings offer unparalleled crimp reliability and durability.

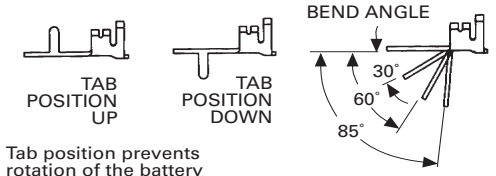

Tab position prevents rotation of the battery terminal during installation.

Delphi offers ***battery cable assemblies*** for applications requiring an angled terminal. Contact your regional support representative.

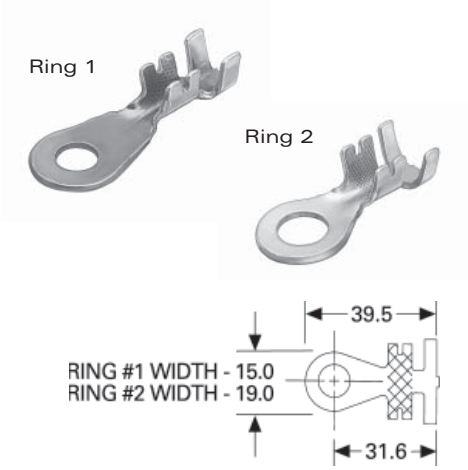

Short Neck Ring Terminals

Ring #	Stud Size	Hole Dia.	Cable Range (mm²)	Part #	Width	Material	Plating	Stock Thickness (mm)
1	M6	6.70	32.0	12146425	15.0	Copper	Tin	1.52
1	M6	6.70	19.0-13.0	12146366	15.0	Copper	Tin	1.52
1	M6	6.70	8.0	12146364	15.0	Copper	Tin	1.30
1	M8	8.50	32.0	12191220	19.0	Copper	Tin	1.52
1	M8	8.50	32.0	12146429	15.0	Copper	Tin	1.52
1	M8	8.50	19.0-13.0	12146365	15.0	Copper	Tin	1.52
1	M8	8.50	8.0	12146363	15.0	Copper	Tin	1.30
2	M10	10.34	32.0	12146744	19.0	Copper	Tin	1.52
2	M10	10.34	19.0-13.0	12146745	19.0	Copper	Tin	1.52

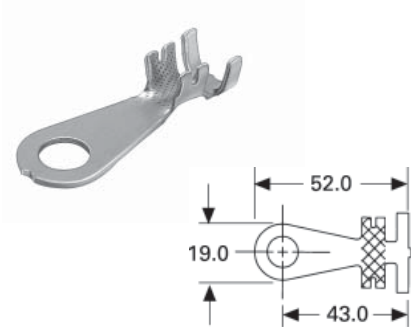

Standard Neck Ring Terminals

Stud Size	Hole Dia.	Cable Range (mm²)	Part #	Material	Plating	Stock Thickness (mm)
M6	6.70	32.0	12124276	Copper	Tin	1.52
M6	6.70	19.0-13.0	12146713	Copper	Tin	1.52
M6	6.70	8.0	12124296	Copper	Tin	1.52
M8	8.50	62.0-50.0	12103014	Copper	Tin	1.83
M8	8.50	32.0	12146361	Copper	Tin	1.52
M8	8.50	19.0-13.0	12129598	Copper	Tin	1.52
M8	8.50	8.0	12124297	Copper	Tin	1.52
M10	10.34	62.0-50.0	12103010	Copper	Tin	1.83
M10	10.34	50.0	12160231	Copper	Tin	1.83
M10	10.34	32.0	12146360	Copper	Tin	1.52
M10	10.34	19.0-13.0	12146362	Copper	Tin	1.52
M10	10.34	8.0	12124295	Copper	Tin	1.30

NOTE: Specifications in this catalog are for general reference only and are subject to change without notice. To verify product information, please contact a Delphi representative.

Peters de Laet
503-661-5088 – phone 503-661-5328 – fax
www.pdel.com

Battery / Heavy Duty Terminals

Standard Neck Starter Terminals

Stud Size	Hole Dia.	Tab Position	Cable Range (mm²)	Part #	Material	Plating	Stock Thickness (mm)
M8	8.50	30˚ Up	32.0	12146506	Copper	Tin	1.52
M10	10.34	30˚ Up	32.0	12146401	Copper	Tin	1.52
M8	8.50	30˚ Down	32.0	15317798	Copper	Tin	1.52
M8	8.50	30˚ Down	19.0-13.0	12110246	Copper	Tin	1.52

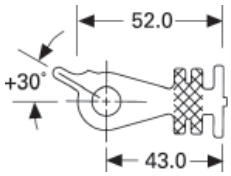

Standard Neck Starter Terminals

Stud Size	Hole Dia.	Tab Position	Cable Range (mm²)	Part #	Material	Plating	Stock Thickness (mm)
M8	8.50	-30˚ Up	50.0	12161119	Copper	Tin	1.83
M8	8.50	-30˚ Up	32.0	12129433	Copper	Tin	1.52
M8	8.50	-30˚ Up	19.0-13.0	12146579	Copper	Tin	1.52
M10	10.34	-30˚ Up	50.0	12146471	Copper	Tin	1.83
M10	10.34	-30˚ Up	32.0	12146487	Copper	Tin	1.52
M8	8.50	-30˚ Down	32.0	12129651	Copper	Tin	1.52
M8	8.50	-30˚ Down	19.0-13.0	12160443	Copper	Tin	1.52
M10	10.34	-30˚ Down	32.0	12160281	Copper	Tin	1.52

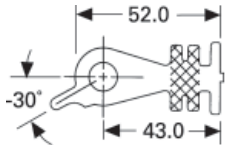

Standard Neck Starter Terminals

Stud Size	Hole Dia.	Tab Position	Cable Range (mm²)	Part #	Material	Plating	Stock Thickness (mm)
M8	8.50	90˚ Up	50.0	15305504	Copper	Tin	1.83
M8	8.50	90˚ Up	32.0	12129437	Copper	Tin	1.52
M8	8.50	90˚ Up	19.0-13.0	12129435	Copper	Tin	1.52
M10	10.34	90˚ Up	50.0	12160229	Copper	Tin	1.83
M10	10.34	90˚ Up	32.0	15304850	Copper	Tin	1.52
M8	8.50	90˚ Down	32.0	12161133	Copper	Tin	1.52
M8	8.50	90˚ Down	19.0-13.0	12161170	Copper	Tin	1.52

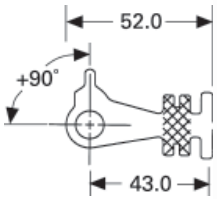

Standard Neck Starter Terminals

Stud Size	Hole Dia.	Tab Position	Cable Range (mm²)	Part #	Material	Plating	Stock Thickness (mm)
M8	8.50	-90˚ Up	32.0	12176593	Copper	Tin	1.52
M8	8.50	-90˚ Up	19.0-13.0	12160242	Copper	Tin	1.52
M10	10.34	-90˚ Up	50.0	12129222	Copper	Tin	1.83
M10	10.34	-90˚ Up	32.0	12129628	Copper	Tin	1.52
M8	8.50	-90˚ Down	50.0	12160233	Copper	Tin	1.83
M8	8.50	-90˚ Down	32.0	12160232	Copper	Tin	1.52
M8	8.50	-90˚ Down	19.0-13.0	12146999	Copper	Tin	1.52
M10	10.34	-90˚ Down	19.0-13.0	12146736	Copper	Tin	1.52

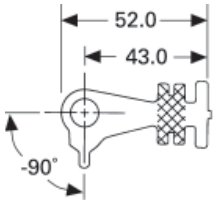

NOTE: Specifications in this catalog are for general reference only and are subject to change without notice. To verify product information, please contact a Delphi representative.

Peters de Laet
503-661-5088 – phone 503-661-5328 – fax
www.pdel.com

Battery / Heavy Duty Terminals

Standard Neck Starter Terminals

Stud Size	Hole Dia.	Tab Position	Cable Range (mm²)	Part #	Material	Plating	Stock Thickness (mm)
M8	8.50	150˚ Up	50.0	15305508	Copper	Tin	1.83
M8	8.50	150˚ Up	32.0	12191773	Copper	Tin	1.52
M10	10.34	150˚ Up	50.0	12191005	Copper	Tin	1.83
M8	8.50	150˚ Down	19.0-13.0	12146718	Copper	Tin	1.52
M10	10.34	150˚ Down	32.0	12191461	Copper	Tin	1.52

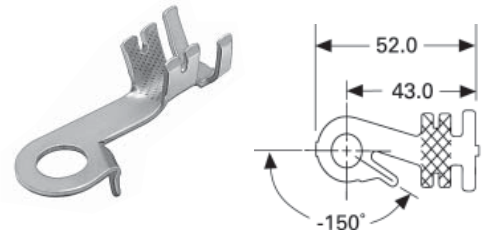

Standard Neck Starter Terminals

Stud Size	Hole Dia.	Tab Position	Cable Range (mm²)	Part #	Material	Plating	Stock Thickness (mm)
M8	8.50	-150˚ Up	50.0	12191787	Copper	Tin	1.83
M10	10.34	-150˚ Down	32.0	15318209	Copper	Tin	1.52

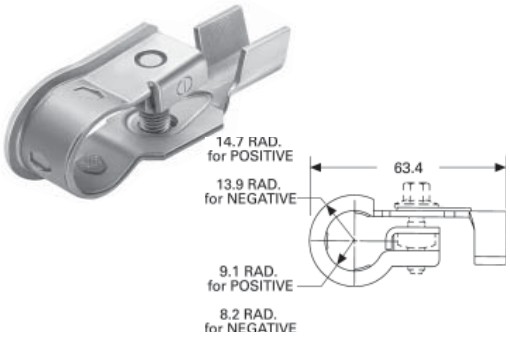

Top Post Battery Terminals

Application	Cable Range (mm²)	Part #	Material	Plating	Stock Thickness (mm)
Negative	50.0	12177299	Copper	Tin	1.52
Positive	50.0	12177296	Copper	Tin	1.52
Negative	32.0	12177297	Copper	Tin	1.52
Positive	32.0	12177298	Copper	Tin	1.52
Positive	19.0	15305118	Copper	Tin	1.52
Negative	19.0	15305119	Copper	Tin	1.52

Fastener Bolt (12177293) and nut (12177294) are available from the manufacturer.

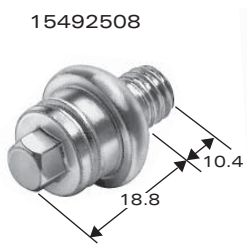

Battery Bolts & Spacer

Part #	Material	Plating	Spacer
15492508	Steel	Zinc Gold Chromate	–
15492510	Steel	Zinc Gold Chromate	12004189

Coated with "Pavco" sealer to provide corrosion protection.

NOTE: Specifications in this catalog are for general reference only and are subject to change without notice. To verify product information, please contact a Delphi representative.

Peters de Laet
503-661-5088 – phone 503-661-5328 – fax
www.pdel.com

Side Post Battery Terminals & Covers

Side Post Battery Terminals

Stud Size	Hole Dia.	Cable Range (mm^2)	Part #	Barbs*	Material	Plating	Stock Thickness (mm)
M10	9.90	62.0	12129221	Yes	Copper	Tin	1.83
M10	9.90	50.0	12129465	Yes	Copper	Tin	1.83
M10	9.90	32.0	12146466	Yes	Copper	Tin	1.52
M10	9.90	19.0	12146467	Yes	Copper	Tin	1.52
M10	9.90	13.0	12146464	Yes	Copper	Tin	1.52

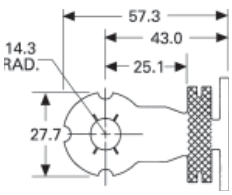

*Barbs (indentations in center hole) in terminals are used to prevent rotation after assembly. Bolts ordered separately.

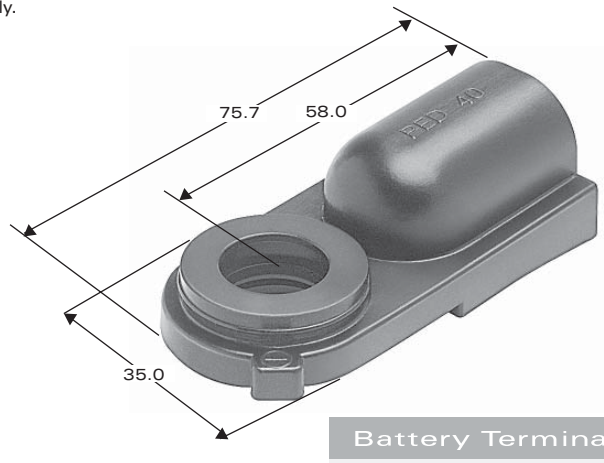

Battery Terminal Covers

Part #	Color	Overall Length	Height	Width	Application	Material
12160209	Black	75.7	25.5	35.0	Single	Vinyl
12160210	Red	75.7	25.5	35.0	Single	Vinyl

Used with battery bolt 15492508 or equivalent

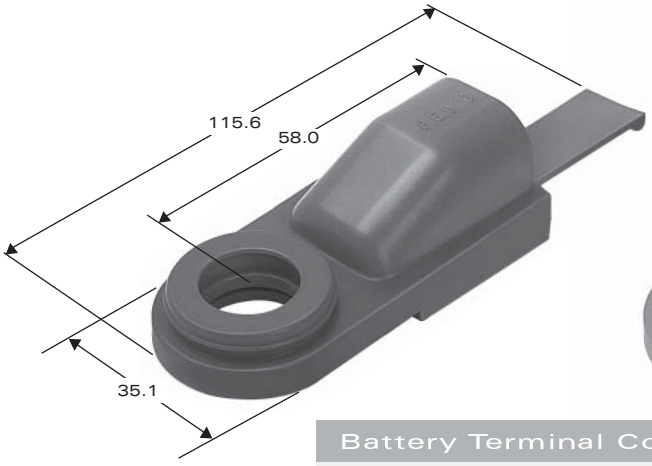

Battery Terminal Cover Assembly*

Part #	Color	Overall Length	Height	Width	Application	Material
15304878	Black	115.6	27.5	35.1	(2) Stackable	Vinyl
15304876	Red	115.6	27.5	35.1	(2) Stackable	Vinyl

Used with battery bolt 15492510 or equivalent.
* Includes 12004189 Spacer.

SECTION NOTES:

- Covers protect the interface between the cable and the battery.

NOTE: Specifications in this catalog are for general reference only and are subject to change without notice. To verify product information, please contact a Delphi representative.

Peters de Laet
503-661-5088 – phone 503-661-5328 – fax
www.pdel.com

Cable Seals & Cavity Plugs

Delphi designs and manufactures a wide selection of cable seals and cavity plugs for a variety of connection systems applications. The following charts captures only a few of the diverse sealing products available for your design needs. Please contact your Delphi representative for additional product selections and application information.

3.6mm Internal Cavity Diameter Cable Seals

Reel Part #	Loose Part #	Cable Dia.	Material	Color
–	15327913	1.60-1.20	Silicone	Red
15344666	15327918	2.00-1.20	Silicone	Gray
–	15339412	2.10-1.90	Silicone	Yellow
–	15344324	2.10-1.20	Silicone	Dk. Red
12191155	15366022	1.90-1.40	Silicone	Green
–	15305351	2.10-1.70	Silicone	Yellow

3.6mm Internal Cavity Diameter Cavity Plug

Part #	Material	Color
12198198	Silicone	White

4.0mm Internal Cavity Diameter Cable Seals

Part #	Cable Dia.	Material	Color
–	15366021	1.90-1.20	Silicone	White
–	15366060	2.40-1.86	Silicone	Blue

4.0mm Internal Cavity Diameter Cavity Plug

Part #	Material	Color
15305171	Silicone	Green

5.2mm Internal Cavity Diameter Cable Seals

Reel Part #	Loose Part #	Cable Dia.	Material	Color
12052925	15324974	1.70-1.29	Silicone	Blue
10731091	10737671	2.30-1.50	Silicone	Red
12089442	15324976	2.15-1.60	Silicone	White
15344643	15327863	2.70-2.00	Silicone	Dk. Red
12052924	15324973	2.85-2.03	Silicone	Dk. Red
10731090	10737670	2.40-2.20	Silicone	Blue
10720641	15327859	2.90-2.70	Silicone	Yellow
15343826	15339967	2.10-1.20	Silicone	Blue
15343827	15339838	3.00-2.20	Silicone	White
12191157	15366064	2.40-1.86	Silicone	Purple

5.2mm Internal Cavity Diameter Cavity Plugs

Part #	Material	Color
15337197	Silicone	White
10730124	Silicone	Green
12059168	Silicone	Dk. Red

5.7mm Internal Cavity Diameter Cavity Plug

Part #	Material	Color
15305170	Silicone	White

5.7mm Internal Cavity Diameter Cable Seals

Part #	Cable Dia.	Material	Color
–	10720941	2.00-1.20	Silicone	Gray
–	10720950	2.90-2.10	Silicone	Yellow

5.8mm Internal Cavity Diameter Cable Seals

Reel Part #	Loose Part #	Cable Dia.	Material	Color
12191221	15366065	1.90-1.20	Silicone	Orange
–	12191235	3.90-3.40	Silicone	Purple

5.8mm Internal Cavity Diameter Cavity Plug

Part #	Material	Color
15305170	Silicone	White

SECTION NOTES:

- Cable seals and cavity plugs are designed using multiple internal configurations. These design variations do not affect sealability.
- Your regional support representative will help you select the appropriate cable seal based on: cavity diameter, cable diameter, and crimp configuration requirements.

NOTE: Specifications in this catalog are for general reference only and are subject to change without notice. To verify product information, please contact a Delphi representative.

Peters de Laet
503-661-5088 – phone 503-661-5328 – fax
www.pdel.com

Cable Seals & Cavity Plugs

6.7mm Internal Cavity Diameter Cable Seals

Reel Part #	Loose Part #	Cable Dia.	Material	Color
12034365	15324983	1.70-1.29	Silicone	Dk. Red
12089444	15324985	2.15-1.60	Silicone	Purple
12015284	15324982	2.85-2.03	Silicone	Green
12041352	15324984	2.42-2.03	Silicone	Tan
12015359	15324980	3.49-2.81	Silicone	Gray
-	10720851	4.20-3.50	Silicone	Blue

6.7mm Internal Cavity Diameter Cavity Plug

Part #	Material	Color
12010300	Silicone	Green

6.8mm Internal Cavity Diameter Cable Seals

Reel Part #	Loose Part #	Cable Dia.	Material	Color
10717456	10720611	2.30-1.50	Silicone	Green
10718234	10720613	3.00-2.20	Silicone	Yellow
10731103	10720615	3.70-3.40	Silicone	White

6.8mm Internal Cavity Diameter Cavity Plug

Part #	Material	Color
10720617	Silicone	Red

8.5mm Internal Cavity Diameter Cable Seals

Reel Part #	Loose Part #	Cable Dia.	Material	Color
15344644	15363779	2.00-1.20	Silicone	Yellow
12052931	15324991	2.15-1.60	Silicone	Yellow
-	15327998	2.70-2.00	Silicone	Blue
12048433	15324988	2.85-2.01	Silicone	White
15344645	15363604	2.90-2.00	Silicone	White
12052452	15324989	3.76-2.81	Silicone	Red
15337204	15327864	2.80-3.80	Silicone	Dk. Red
15344646	15363605	3.60-4.50	Silicone	Green
12065703	15324987	4.40-5.16	Silicone	Orange
15344104	15344647	4.40-5.10	Silicone	Gray

8.5mm Internal Cavity Diameter Cavity Plug

Part #	Material	Color
12066082	Silicone	Green

9.8mm Internal Cavity Diameter Cable Seals

Reel Part #	Loose Part #	Cable Dia.	Material	Color
12077760	15324997	2.40-1.65	Silicone	Tan
12059259	15324995	2.85-2.01	Silicone	Dk. Red
12059258	15324994	3.75-2.81	Silicone	Gray
12059260	15324996	4.50-3.61	Silicone	Blue
12059257	15324993	5.15-4.40	Silicone	Green

9.8mm Internal Cavity Diameter Cavity Plug

Part #	Material	Color
12059255	Silicone	Green

13.75mm Internal Cavity Diameter Cable Seals

Part #	Cable Dia.	Material	Color
15492996	3.00-2.20	Silicone	Blue
15327126	4.30-3.40	Silicone	Dk. Red
10720983	6.40-6.00	Silicone	Green
15470809	7.50-6.50	Silicone	Yellow

13.75mm Internal Cavity Diameter Cavity Plug

Part #	Material	Color
10720907	Silicone	Green

NOTE: Specifications in this catalog are for general reference only and are subject to change without notice. To verify product information, please contact a Delphi representative.

Peters de Laet
503-661-5088 – phone 503-661-5328 – fax
www.pdel.com

56 Series Device Connections

56 Series Female Terminals Unsealed			
Part #	**Cable Range (mm²)**	**Material**	**Plating**
12124512	0.80-0.50	Brass	Tin
12124513	0.80-0.50	Brass	Tin
12124515	2.0-1.0	Brass	Tin
12124517	2.0-1.0	Brass	Tin
12124518	3.0	Brass	Tin
12124519	3.0	Brass	Tin
12124520	0.80-0.50 (2 Req'd.)	Brass	Tin
12124522	2.0-1.0 (2 Req'd.)	Brass	Tin
12124523	2.0-1.0 (2 Req'd.)	Brass	Tin

Using a proven terminal interface technology and an enhanced crimp configuration, 56 Series Device Connections remain an industry standard. A number of standard industry device connection systems are immediately available.

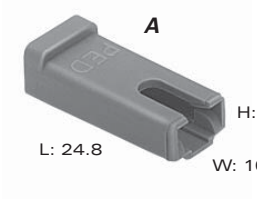

A. Part No: 12015306

Description:	Connector 1F
Size:	24.8L x 13.6H x 10.7W
Color:	Gray
Material:	PA66 HS IM
Terminals:	See Above, 56 Series
Typical App:	Switch

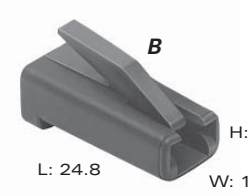

B. Part No: 12004267

Description:	Connector 1F
Size:	24.8L x 13.6H x 10.2W
Color:	Black
Material:	PP IM
Terminals:	See Above, 56 Series
Typical App:	Horn

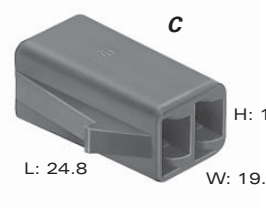

C. Part No: 08900863

Description:	Connector 2F
Size:	24.8L x 10.6H x 19.2W
Color:	Black
Material:	PP
Terminals:	See Above, 56 Series
Typical App:	Switch

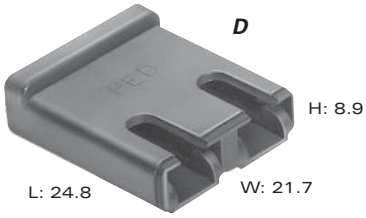

D. Part No: 02973407

Description:	Connector 2F
Size:	24.8L x 8.9H x 21.7W
Color:	Black
Material:	PP
Terminals:	See Above, 56 Series
Typical App:	Various

SECTION NOTES:

- Nib on terminal provides increased retention when used with specific mating blade.

NOTE: Specifications in this catalog are for general reference only and are subject to change without notice. To verify product information, please contact a Delphi representative.

Peters de Laet
503-661-5088 – phone 503-661-5328 – fax
www.pdel.com

56 Series Device Connections

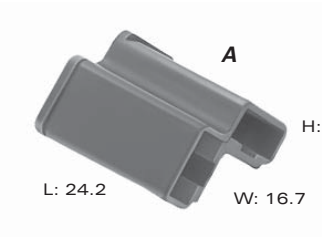

A. Part No: 02973385

Description:	Connector 2F
Size:	24.2L x 16.8H x 16.7W
Color:	Black
Material:	PP
Terminals:	See Page 9.10
Typical App:	Various

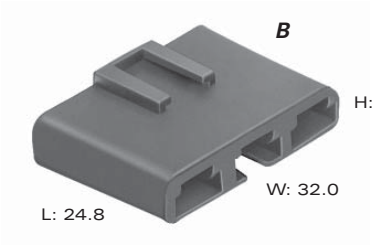

B. Part No: 02984959

Description:	Connector 3F
Size:	24.8L x 8.4H x 32.0W
Color:	Black
Material:	PP
Terminals:	See Page 9.10
Typical App:	Various

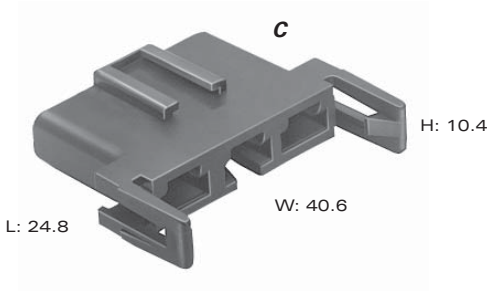

C. Part No: 08905790

Description:	Connector 3F
Size:	24.8L x 10.4H x 40.6W
Color:	Black
Material:	PP
Terminals:	See Page 9.10
Typical App:	Switch

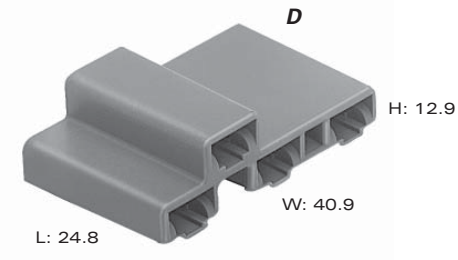

D. Part No: 02965019

Description:	Connector 4F
Size:	24.8L x 12.9H x 40.9W
Color:	Gray
Material:	PP 40%TF
Terminals:	See Page 9.10
Typical App:	Relay

NOTE: Specifications in this catalog are for general reference only and are subject to change without notice. To verify product information, please contact a Delphi representative.

Peters de Laet
503-661-5088 – phone 503-661-5328 – fax
www.pdel.com

56 Series Device Connections

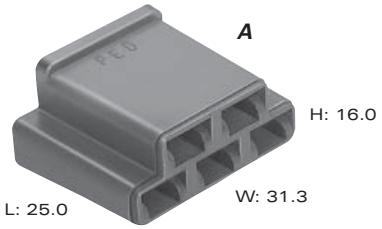

A. Part No: 12004327

Description:	Connector 5F
Size:	25.0L x 16.0H x 31.3W
Color:	Brown
Material:	PP
Terminals:	See Page 9.10
Typical App:	Various

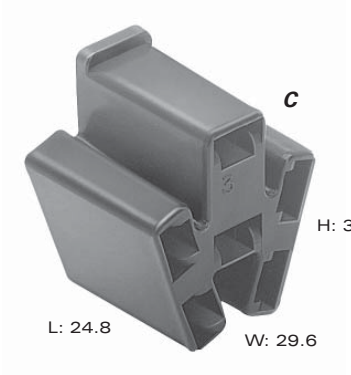

C. Part No: 02984017

Description:	Connector 6F
Size:	24.8L x 34.5H x 29.6W
Color:	Black
Material:	PP
Terminals:	See Page 9.10
Typical App:	Switch

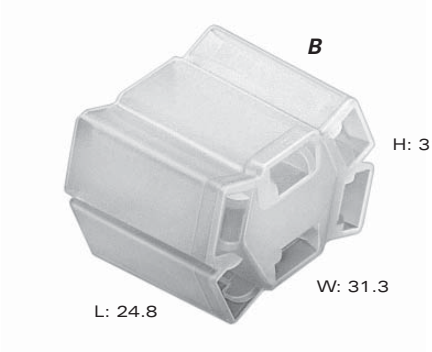

B. Part No: 12052978

Description:	Connector 6F
Size:	24.8L x 31.7H x 31.3W
Color:	Natural
Material:	PP
Terminals:	See Page 9.10
Typical App:	Switch

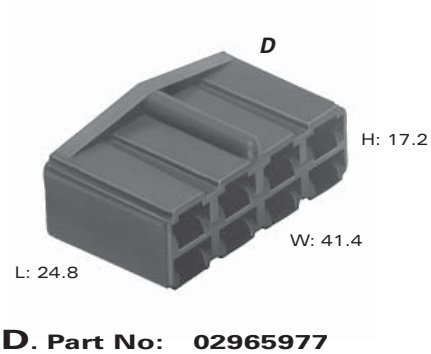

D. Part No: 02965977

Description:	Connector 8F
Size:	24.8L x 17.2H x 41.4W
Color:	Black
Material:	PP
Terminals:	See Page 9.10
Typical App:	Various

NOTE: Specifications in this catalog are for general reference only and are subject to change without notice. To verify product information, please contact a Delphi representative.

Peters de Laet
503-661-5088 – phone 503-661-5328 – fax
www.pdel.com

Clips

Connectors are positively positioned within the vehicle via the use of Delphi's integral connector clips. These clips are easily assembled to the connectors and reliably remain in position. Designs incorporate features that prevent movement or rattling regardless of driving conditions.

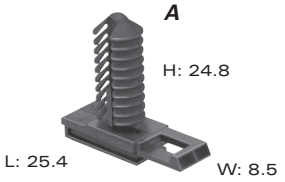

A. Part No: 12186353

Description:	Clip (Self Locking)
Size:	25.4L x 24.8H x 8.5W
Color:	Black
Material:	PA66 HS IM

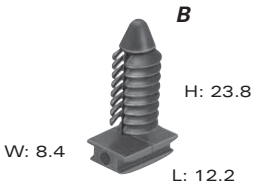

B. Part No: 12047835

Description:	Clip
Size:	12.2L x 23.8H x 8.4W
Color:	Black
Material:	PA6
Note:	Attach by sonic weld (preferred) or adhesive.

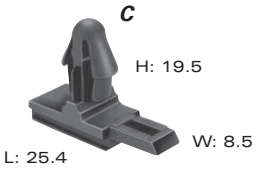

C. Part No: 12084149 (Black)

Material:	PP IM

Part No: 12110290 (Gray)

Material:	PA66 HS IM
Description:	Clip (Self Locking)
Size:	25.4L x 19.5H x 8.5W

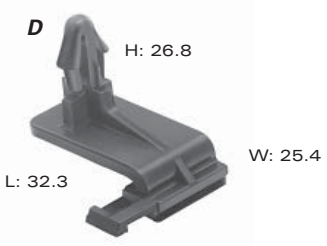

D. Part No: 12110517

Description:	Clip (Self Locking)
Size:	32.3L x 26.8H x 25.4W
Color:	Black
Material:	PA66 HS IM

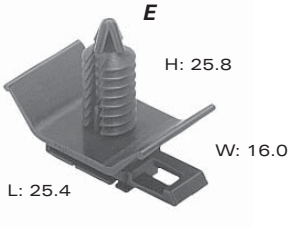

E. Part No: 12110783

Description:	Clip (Self Locking)
Size:	25.4L x 25.8H x 16.0W
Color:	Black
Material:	PA66 HS IM

SECTION NOTES:

- Product information shown is a representative sample of the available plastic and metal clips.
- Self-locking clips require connectors with self-locking features.

NOTE: Specifications in this catalog are for general reference only and are subject to change without notice. To verify product information, please contact a Delphi representative.

Peters de Laet
503-661-5088 – phone 503-661-5328 – fax
www.pdel.com

Clips

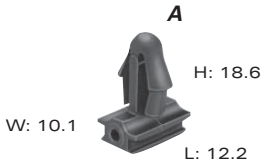

A. Part No: 08905563

Description:	Clip
Size:	12.2L x 18.6H x 10.1W
Color:	Black
Material:	PP IM
Note:	Attach by sonic weld (preferred) or adhesive.

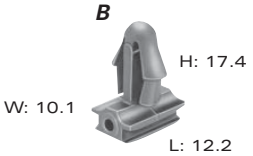

B. Part No: 12084561

Description:	Clip
Size:	12.2L x 17.4H x 10.1W
Color:	Gray
Material:	PA66 HS IM
Note:	Attach by sonic weld (preferred) or adhesive.

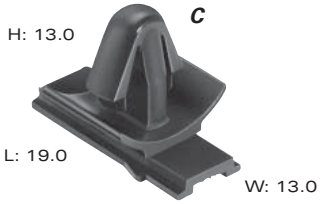

C. Part No: 10717452

Description:	Clip (Self-Locking)
Size:	19.0L x 13.0H x 13.0W
Color:	Black
Material:	PA66

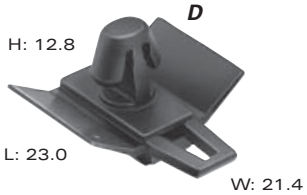

D. Part No: 15439875

Description:	Clip (Self-Locking)
Size:	23.0L x 12.8H x 21.4W
Color:	Black
Material:	PA66

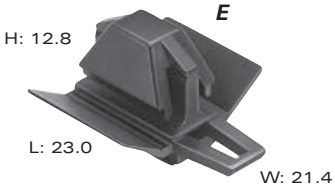

E. Part No: 15427170

Description:	Clip (Self-Locking)
Size:	23.0L x 12.8H x 21.4W
Color:	Black
Material:	PA66

F. Part No: 10720007

Description:	Tube Clip (Self-Locking)
Size:	19.5L x 24.0H x 21.0W
Color:	Black
Material:	PA66

NOTE: Specifications in this catalog are for general reference only and are subject to change without notice. To verify product information, please contact a Delphi representative.

Peters de Laet
503-661-5088 – phone 503-661-5328 – fax
www.pdel.com

Clips

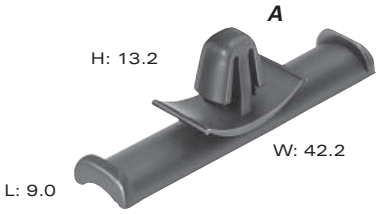

A. Part No: 12147875

Description:	Harness Clip
Size:	9.0L x 13.2H x 42.2W
Color:	Black
Material:	PA66

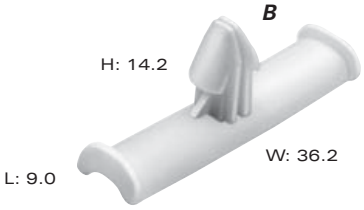

B. Part No: 15344856

Description:	Harness Clip
Size:	9.0L x 14.2H x 36.2W
Color:	Natural
Material:	PP

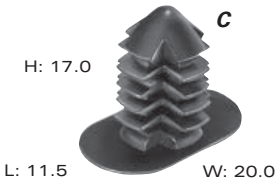

C. Part No: 10719204

Description:	Fixing Clip
Size:	11.5L x 17.0H x 20.0W
Color:	Black
Material:	PA66

Metal Clips

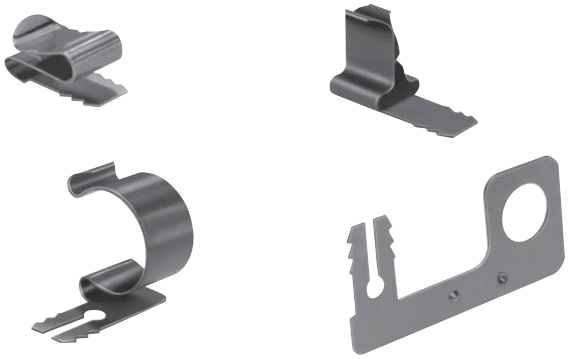

SECTION NOTES:

- Product information shown is a representative sample of the available plastic and metal clips.
- Self-locking clips require connectors with self-locking features.
- Attach by hand arbor or air assist machine.

NOTE: Specifications in this catalog are for general reference only and are subject to change without notice. To verify product information, please contact a Delphi representative.

Connector Carriers

A. Part No: 12185083

Description:	2 Position Carrier
Size:	21.0L x 25.8H x 32.0W
Color:	Black
Material:	PA6 15% GF

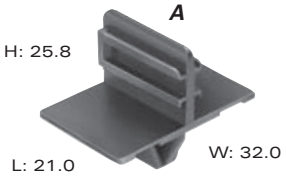

B. Part No: 10719975

Description:	4 Position Carrier
Size:	53.0L x 36.4H x 142.0W
Color:	Black
Material:	PA6 15% GF

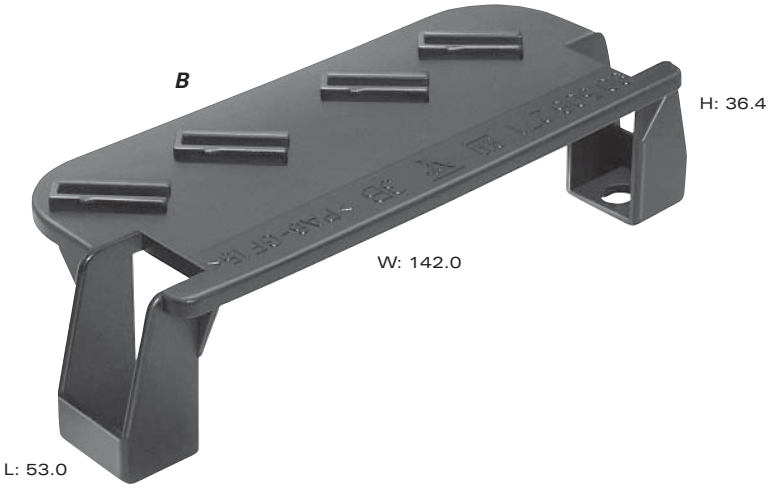

C. Part No: 10740405

Description:	5 Position Carrier
Size:	33.0L x 27.3H x 82.0W
Color:	Black
Material:	PP 20% GF

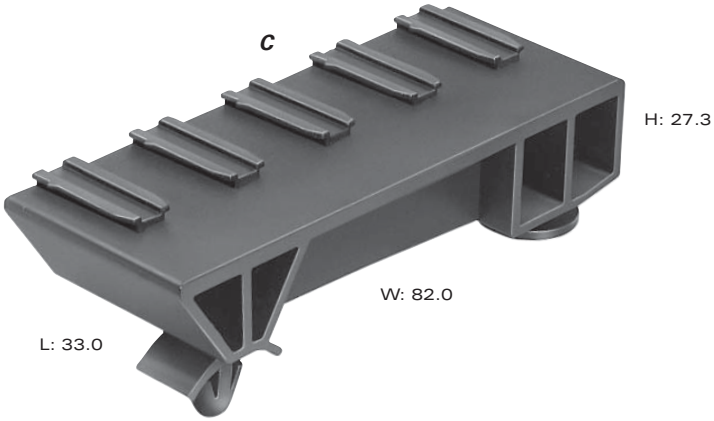

D. Part No: 10720085

Description:	8 Position* Carrier
Size:	98.0L x 37.5H x 194.5W
Color:	Black
Material:	PA6 15% GF

*6 standard, 2 non-standard.

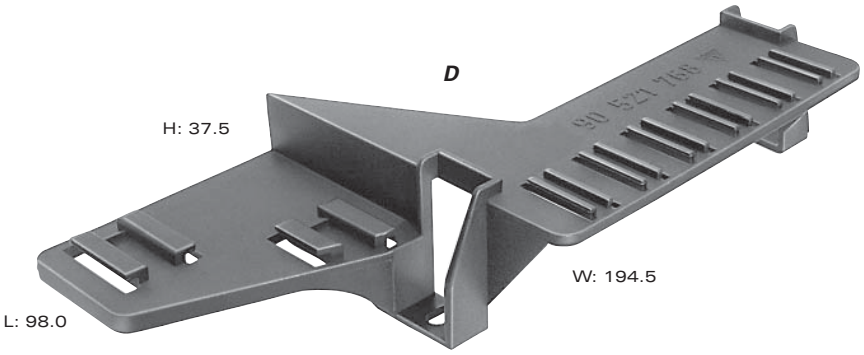

NOTE: Specifications in this catalog are for general reference only and are subject to change without notice. To verify product information, please contact a Delphi representative.

Peters de Laet
503-661-5088 – phone 503-661-5328 – fax
www.pdel.com

Application Tooling

Delphi offers application tooling for both automatic and hand tool operations. This section highlights various presses and dies as well as some of our more common hand tools.

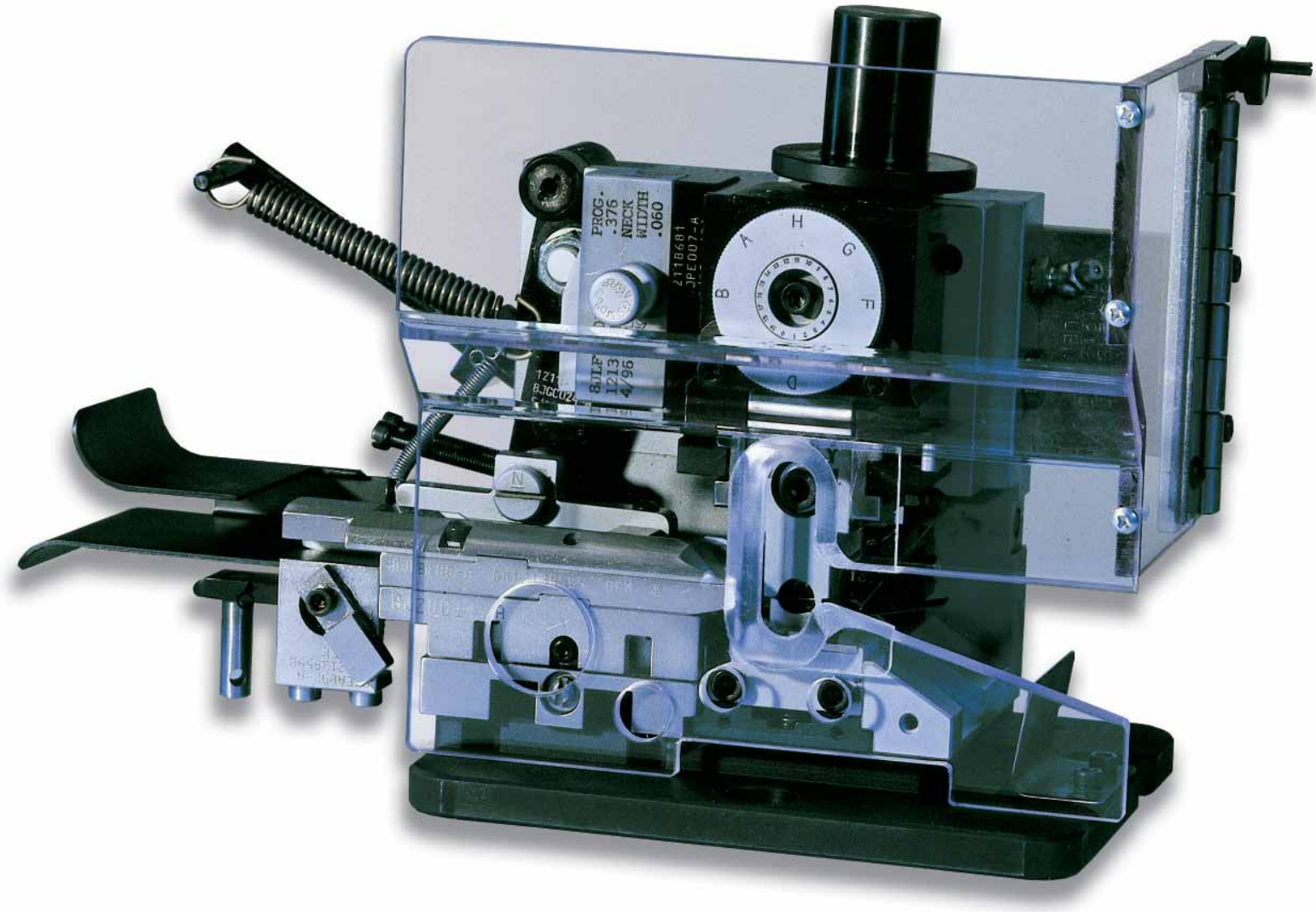

Additional information on our automatic dies and presses is available by calling North American Regional Sales and Service number:

1-800-DIE-INFO (1-800-343-4636)

(All other regions contact regional support representative)

Additional information on our hand tools is available by contacting your regional support representative.

Application Tooling

Delphi Presses:

Delphi offers two bench-style Speed-O-Matic presses.

3-ton used for:	Metri-Pack, Weather-Pack, ComPack, Micro-Pack, and Pack-Con terminals.
5-ton used for:	56/58/59 series terminals and ring terminals.

Safety Feature:

- An optional single stroke mechanism will prevent the press from recycling if the electrical anti-repeat should fail.

Motor Features:

- 1/2 H.P. (5-Ton) or 1/3 H.P. (3-Ton). 115V, 1750 rpm, single phase, 60 cycle.

Presses may be purchased, leased or rented.
Contact your account representative.

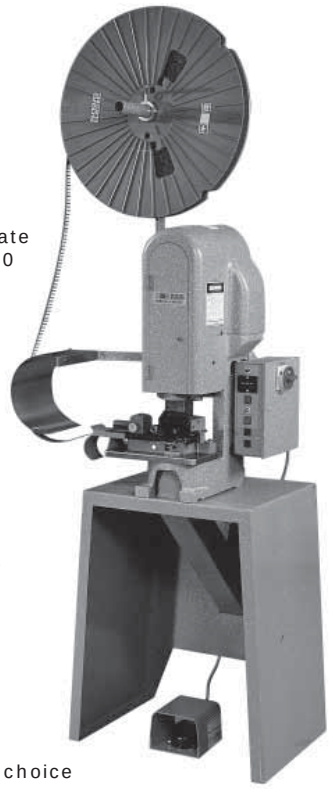

Easy maintenance

Application rate of up to 4,000 terminals per hour

Safety guard

Proven press in the connection systems industry

The press of choice for Delphi

Rugged

Factory life of over 40 years

Optional heavy-duty stand

Delphi Speed-O-Matic Dies:

Delphi Speed-O-Matic dies used together with our Speed-O-Matic 3-Ton or 5-Ton press will allow a maximum application rate of up to 4,000 terminals per hour. Speed-O-Matic dies can be set up to run a variety of applications.

Therefore, when ordering an applicator die, please provide Delphi with the following information:

- Terminal part number
- Gauge of cable to be crimped
- Type of cable insulation

Speed-O-Matic dies may be purchased, and certain dies are also available for rental or lease. Contact your account representative.

Please see cross-reference sheet for terminal-to-die information. See Page 10.14.

Factory life of over 40 years

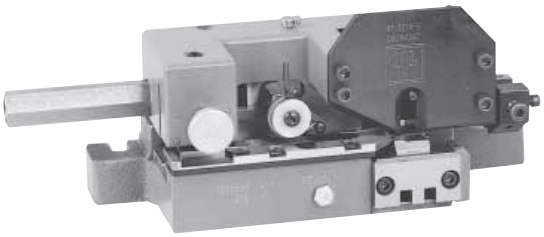

Application rate of up to 4,000 terminals per hour

Heavy-duty

NOTE: Specifications in this catalog are for general reference only and are subject to change without notice. To verify product information, please contact a Delphi representative.

Peters de Laet
503-661-5088 – phone 503-661-5328 – fax
www.pdel.com

Application Tooling

Reliable

Flexible

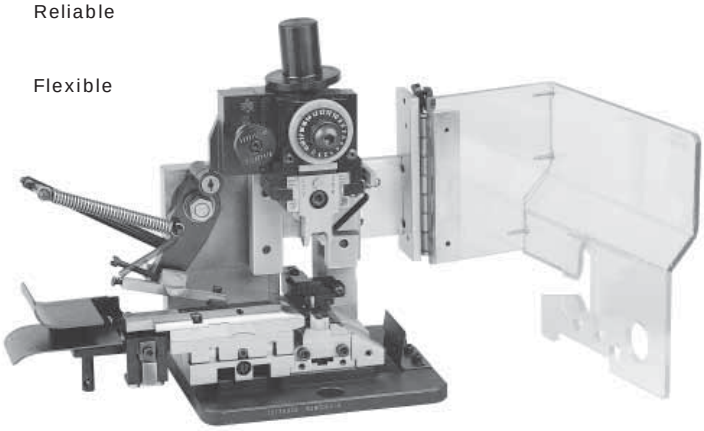

Quick and easy die changes

Delphi E-Z Pack Die:

E-Z Pack Die can best be described as an advanced and flexible terminal application system.

Features:

- This die consists of a die base, quick change module (terminal specific), and a conversion kit that adapts the base to various presses.
- This die may be installed in Delphi's 3 or 5-ton press, or into other manufacturers' presses with an adapter kit.
- This die may be bench mounted or installed on wire processing cutter equipment.

Advantages:

- Reduces changeover time and downtime.
- Die changes are performed quickly and easily, without a need for special tools. Simply remove the tool module and insert the next module into the die base.

E-Z Pack Dies may be purchased, leased or rented. Contact your account representative.

Please see cross reference sheet for terminal-to-die information. See Page 10.14.

Efficient

Automatic cutter cycle

Optional tape dispenser

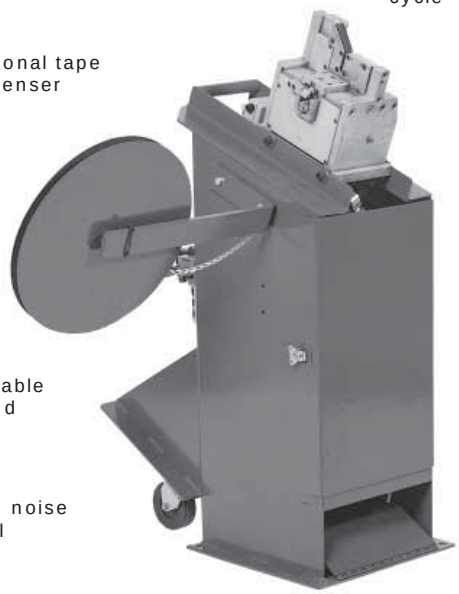

Portable stand

Low noise level

Requires minimal floor space

Optional liquid solder pot

Delphi Low Profile Splice Die and Stand:

This air operated press and die allows splicing of two or more wire leads and provides good visibility to crimping area.

Die and stand sold as a unit.

Specifications:

Overall height:	1143mm (45 inches)
Overall width:	914mm (36 inches)
Overall depth:	610mm (24 inches)

NOTE: Specifications in this catalog are for general reference only and are subject to change without notice. To verify product information, please contact a Delphi representative.

Application Tooling

Delphi Flex-Guard Conduit Cutter:

This versatile machine is designed for use both as a production line machine and for bulk conduit cutting operations.

For production line operations:

- With machine modifications, will cut up to three different lengths of conduit in any pre-determined sequence.

For bulk cutting operations:

- Will cut as many as 99,999 pieces of conduit of the same length in one continuous operation.

This cutter requires both electrical and pneumatic connections.

Specifications:

Overall height:	1854mm (73 inches)
Overall width:	787mm (31 inches)
Overall depth:	330mm (13 inches)

Power Requirements:

Electrical-440 volt, 60 cycle AC, 110 volt may be requested.

Cuts various lengths

Versatile

Easy to operate

Delphi Automatic Cable Seal Applicator:

This tool is designed to automatically apply cable seals from a continuous mylar carrier strip onto unstripped cable. Cable may range in size from 0.22mm^2 gauge (thin wall) to 5.0mm^2 gauge (heavy wall).

This applicator is designed for use on automatic cable processing equipment.

No progression adjustment

Quick change tooling

Efficient

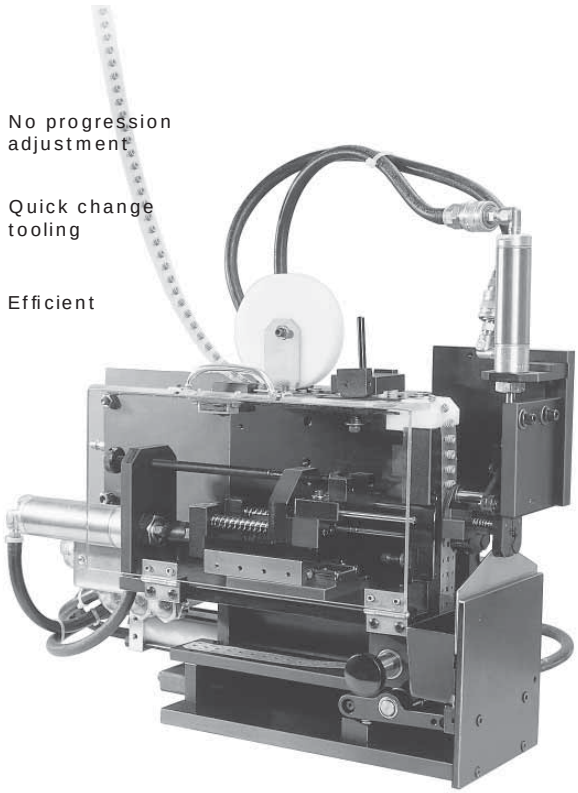

NOTE: Specifications in this catalog are for general reference only and are subject to change without notice. To verify product information, please contact a Delphi representative.

Peters de Laet
503-661-5088 – phone 503-661-5328 – fax
www.pdel.com

Application Tooling

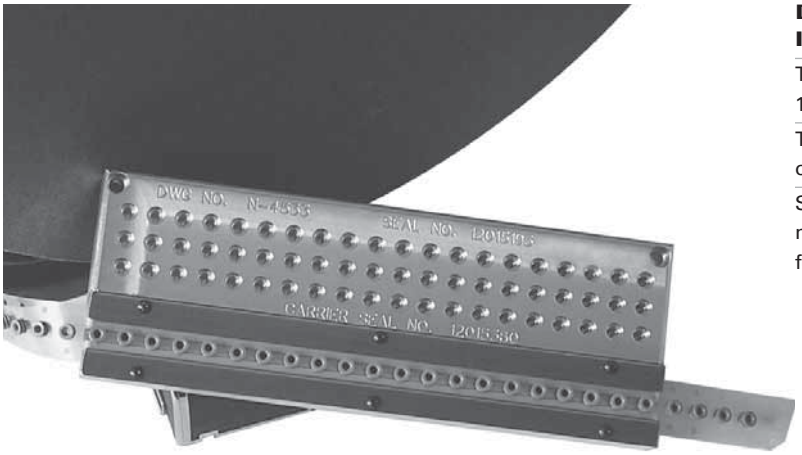

Delphi Manual Cable Seal Insertion Block:

This block is a machined piece of aluminum, approximately 1″ thick, 6″ wide, and 12″ long.

There are 80 holes drilled to correspond to the dimensions of Delphi's various cable seals.

Seals may be inserted into the block as loose piece or on mylar tape if desired. This Seal Insertion Block is designed for lower volume applications.

Weather-Pack 6060 Gauge as a Process Control Aid:

Specifications:

Weight:	480g (1.05 lb.)
Length:	102mm (4 inches)
Width:	38mm (1-1/2 inches)
Height:	35mm (1-3/8 inches)

This gauge is used as a process aid to verify that terminals are crimped and mated properly.

NOTE: Specifications in this catalog are for general reference only and are subject to change without notice. To verify product information, please contact a Delphi representative.

Crimp Tools

A. Part No: 12040070

Application: Unsealed Doubles
Core and Insulation

Cable Range (mm^2): 2.0-0.50

A

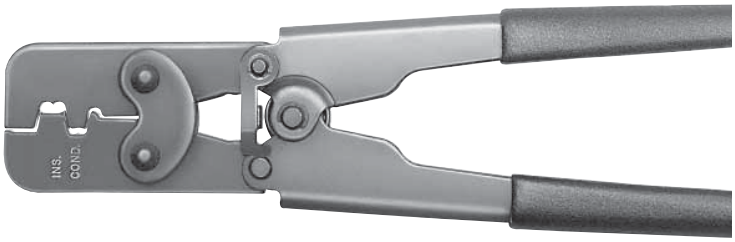

B. Part No: 06285847

Application: Unsealed All Purpose
Core and Insulation

Cable Range (mm^2): 2.0-0.50 (5.0-3.0 Core only)

B

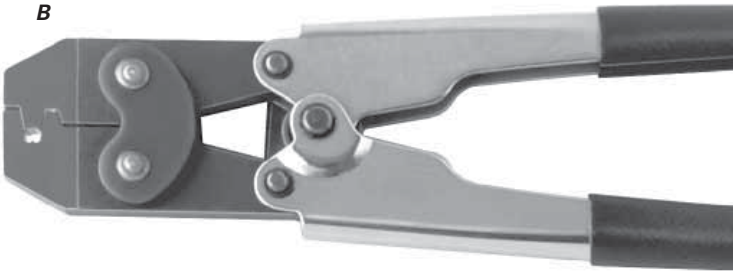

C. Part No: 12018777

Application: Unsealed All Purpose
Core and Insulation

Cable Range (mm^2): 0.35

C

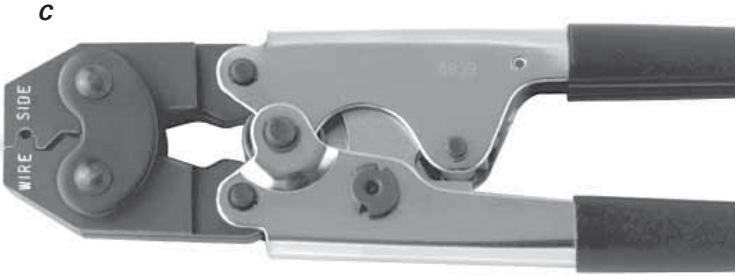

D. Part No: 12014254

Application: Sealed Weather Pack Pin and Sleeve
Core and Insulation

Cable Range (mm^2): 2.0-0.50

D

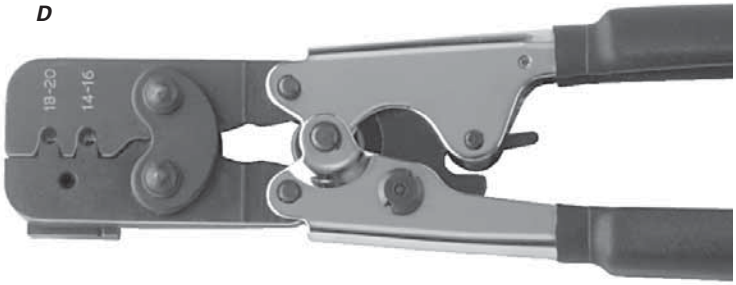

E. Part No: 12039500

Application: Unsealed 150 Metri-Pack, 150.1 and 150.2 Pull-To-Seat
Core and Insulation

Cable Range (mm^2): 1.0-0.35

E

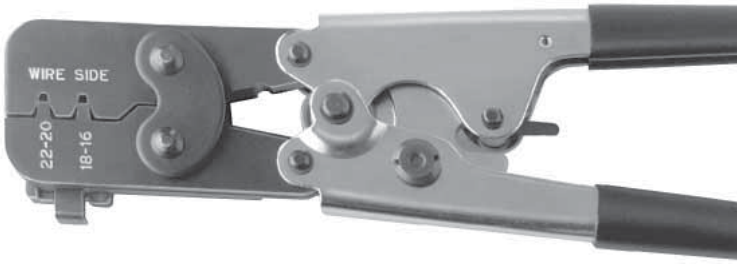

NOTE: Specifications in this catalog are for general reference only and are subject to change without notice. To verify product information, please contact a Delphi representative.

Peters de Laet
503-661-5088 – phone 503-661-5328 – fax
www.pdel.com

Crimp Tools

A. Part No: 12070948

Application: Unsealed Micro-Pack 100, Female only Core and Insulation

Cable Range (mm^2): 2.0-0.35

A

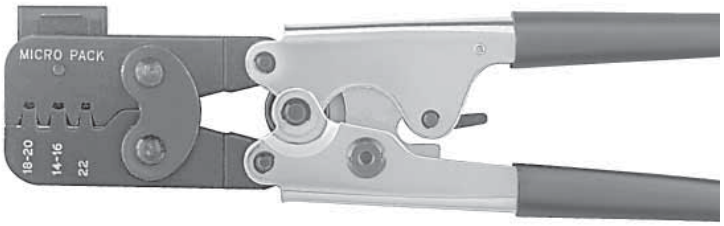

B. Part No: 12070947

Application: Unsealed Metri-Pack, Female only Core and Insulation

Cable Range (mm^2): 5.0-3.0

B

C. Part No: 12071687

Application: Sealed 480 & 630 Metri-Pack Core and Insulation

Cable Range (mm^2): 5.0-3.0

C

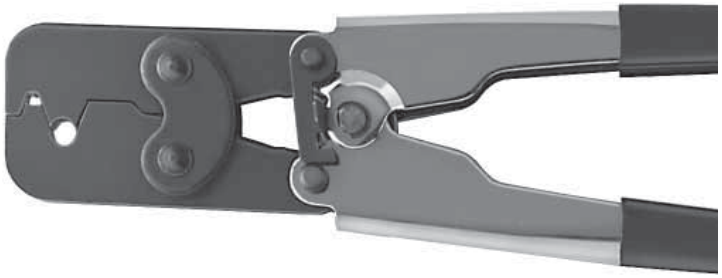

D. Part No: 12125080

Application: Micro-Pack 100W Core and Insulation

Cable Range (mm^2): 0.80-0.35

D

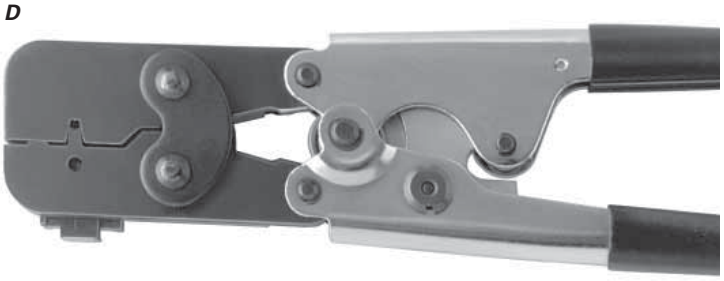

E. Part No: 12155975

Application: Sealed 150 & 280 Metri-Pack Core and Insulation

Cable Range (mm^2): 2.0-0.50

E

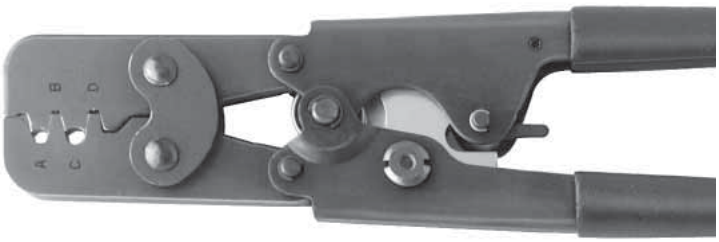

SECTION NOTES:

- Hand crimp tools are designed for repair, prototype or low volume usage.
- Solder with resin core solder to guarantee crimp integrity.

NOTE: Specifications in this catalog are for general reference only and are subject to change without notice. To verify product information, please contact a Delphi representative.

Terminal Removal

A. Part No: 12014012

Application:	Weather-Pack Male and Female
Handle Color:	Clear Yellow
Button Color:	White

A

B. Part No: 12031876

Application:	Micro-Pack 100 Female
Handle Color:	Red
Button Color:	Black

B

C. Part No: 12094429

Application:	GT 150; GT 280; 150 Metri-Pack; 280 Metri-Pack; 280 Tangless & 280 Bus Bar; 630 Pull-To-Seat; Lamp Socket Bases, B-1 & W-3; 800 Metri-Pack Female
Handle Color:	Green
Button Color:	White

C

D. Part No: 12094430

Application:	56 Series; 280 Metri-Pack; 480 Metri-Pack; 630 Metri-Pack; 800 Metri-Pack Male Tangless; Lamp Socket Bases, W-2 & C-2
Handle Color:	Blue
Button Color:	White

D

E. Part No: 12122523

Application:	Micro-Pack 100W; 24Way Female 12129225; 32Way Female 12129025; 36Way Female 12110487
Handle Color:	Gray
Button Color:	Black

E

F. Part No: 12150860

Application:	800 MAXI™ Fuse Female
Handle Color:	Blue
Button Color:	Blue

F

NOTE: Specifications in this catalog are for general reference only and are subject to change without notice. To verify product information, please contact a Delphi representative.

Peters de Laet
503-661-5088 – phone 503-661-5328 – fax
www.pdel.com

Terminal Removal

A

A. Part No: 12151195

Application:	280 Metri-Pack 2Way Bus Bar
Handle Color:	Clear
Button Color:	Black

B

B. Part No: 12151194

Application:	280 Metri-Pack 3Way Bus Bar
Handle Color:	Clear
Button Color:	Red

C

C. Part No: 12151193

Application:	280 Metri-Pack 4Way Bus Bar
Handle Color:	Clear
Button Color:	Blue

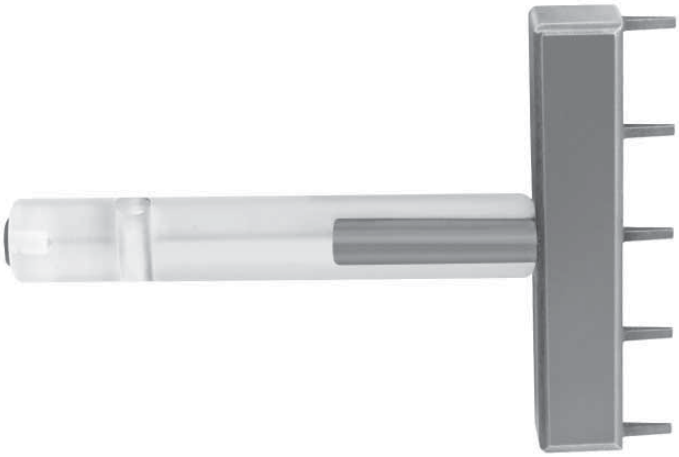

D

D. Part No: 12152395

Application:	280 Metri-Pack 5Way Bus Bar
Handle Color:	Clear
Button Color:	Green (Flat)

NOTE: Specifications in this catalog are for general reference only and are subject to change without notice. To verify product information, please contact a Delphi representative.

Terminal Removal

A. Part No: 10739582

Application: Ducon 0.8

Handle Color: Black

A

B. Part No: 10739605

Application: Ducon 1.5 and 2.8 One Tang

Handle Color: Black

B

C. Part No: 10739583

Application: Ducon 1.5 Two Tang

Handle Color: Black

C

D. Part No: 10739584

Application: Ducon 2.8 Two Tang

Handle Color: Black

D

NOTE: Specifications in this catalog are for general reference only and are subject to change without notice. To verify product information, please contact a Delphi representative.

Peters de Laet
503-661-5088 – phone 503-661-5328 – fax
www.pdel.com

Terminal Removal

A. Part No: 10739585

Application: Ducon 4.8 and 6.3

Handle Color: Black

B. Part No: 10714774

Application: VF 2.8

Handle Color: Black

C. Part No: 10714792

Application: VF 6.3

Handle Color: Black

NOTE: Specifications in this catalog are for general reference only and are subject to change without notice. To verify product information, please contact a Delphi representative.

Peters de Laet
503-661-5088 – phone 503-661-5328 – fax
www.pdel.com

Hand Tools

A. Part No: 12122727

Application:	Cavity Plug Insertion Tool 150 Metri-Pack Series
Handle Color:	Clear
Button Color:	Green

A

B. Part No: 12121897

Application:	Cavity Plug Insertion Tool 280 Metri-Pack Series
Handle Color:	Yellow
Button Color:	Blue

B

C. Part No: 12123162

Application:	Cavity Plug Insertion Tool 480 Metri-Pack Series
Handle Color:	Yellow
Button Color:	Green

C

D. Part No: 12122584

Application:	Cavity Plug Insertion Tool 630 Metri-Pack Series
Handle Color:	Clear
Button Color:	Red

D

E. Part No: 12150547

Application:	Cavity Plug Removal Tool 630 Metri-Pack Series
Handle Color:	Blue
Button Color:	Green

E

F. Part No: 12075402

Application:	Lamp Socket Insert Removal Tool for W-3 Right Angle Wedge Base

F

NOTE: Specifications in this catalog are for general reference only and are subject to change without notice. To verify product information, please contact a Delphi representative.

Peters de Laet
503-661-5088 – phone 503-661-5328 – fax
www.pdel.com

Hand Tools

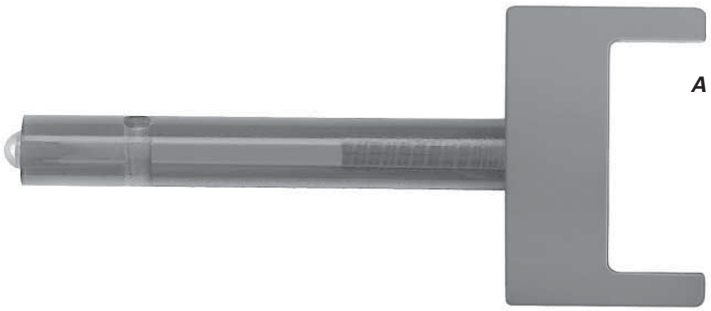

A

A. Part No: 12180082

Application:	Retainer Removal Tool for 100W Connector 24Way 12129225
Handle Color:	Blue
Button Color:	Red

B

B. Part No: 12152019

Application:	Retainer Removal Tool for 100W Connector 32Way 12129025
Handle Color:	Gray
Button Color:	Black

C

C. Part No: 15313892

Application:	GT Male Terminal Stabilizer Removal Tool
Handle Color:	Blue
Button Color:	White

D

D. Part No: 12094441

Application:	All Purpose Large Secondary Lock/ TPA Removal Tool
Handle Color:	Red
Button Color:	White

E

E. Part No: 12122647

Application:	All Purpose Small Secondary Lock/ TPA Removal Tool
Handle Color:	Red
Button Color:	Red

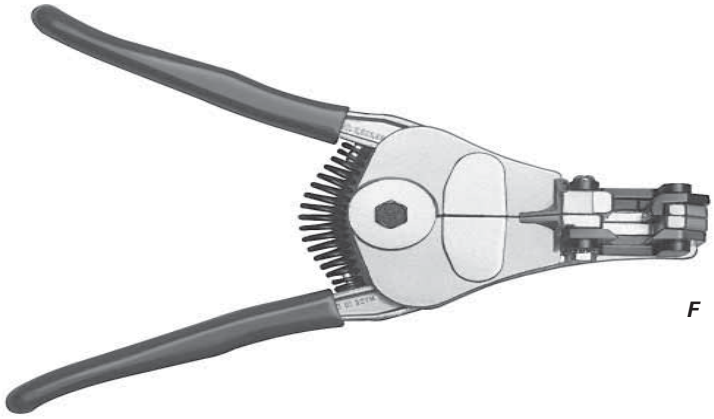

F

F. Part No: 12018256

Application:	Wire Insulation Stripper
Handle Color:	Blue
Cable Range (mm^2):	8.0-0.35

NOTE: Specifications in this catalog are for general reference only and are subject to change without notice. To verify product information, please contact a Delphi representative.

Peters de Laet
503-661-5088 – phone 503-661-5328 – fax
www.pdel.com

Terminal/Crimp Applicator Cross Reference

Part Number	After Termination Part Number	Terminal Description	Speed-O-Matic Die Part Number	E-Z Pack Die Available
12015858		280 Metri-Pack Series - Unsealed	12018253	yes
12015860		480 Metri-Pack Series - Unsealed	12018253	yes
12015864		630 Metri-Pack Series for Relay application - Unsealed	12018253	yes
12015865		630 Metri-Pack Series for Relay application - Unsealed	12018253	yes
12015869		630 Metri-Pack Series - Unsealed	12018253	yes
12015870		630 Metri-Pack Series - Unsealed	12018253	yes
12020035		630 Metri-Pack Series - Unsealed	12018253	yes
12020116		280 Metri-Pack Series - Unsealed	12018253	yes
12020119		480 Metri-Pack Series - Unsealed	12018253	yes
12020120		480 Metri-Pack Series - Unsealed	12018253	yes
12020125		630 Metri-Pack Series - Unsealed	12018253	yes
12020126		630 Metri-Pack Series - Unsealed	12018253	yes
12020156		630 Metri-Pack Series - Pull-To-Seat - Sealed	12018253	yes
12020335		630 Metri-Pack Series - Unsealed	12018253	yes
12020365		630 Metri-Pack Series - Unsealed	12018253	yes
12020366		480 Metri-Pack Series - Unsealed	12018253	yes
12020782		280 Metri-Pack Series - Unsealed	12018253	yes
12020784		480 Metri-Pack Series - Unsealed	12018253	no
12020801		Weather-Pack Series - Sealed	12012249	yes
12033820		480 Metri-Pack Series - Unsealed	12018253	yes
12033972		630 Metri-Pack Series - Unsealed	12018253	no
12033997		630 Metri-Pack Series - Pull-To-Seat - Sealed	12018253	yes
12034046		280 Metri-Pack Series - Unsealed	12018253	yes
12034047		280 Metri-Pack Series - Unsealed	12018253	yes
12040902		100 Micro-Pack Series - Unsealed	12039723	no
12045773		150 Metri-Pack Series - Sealed	12012249	yes
12047581		150 Metri-Pack Series - Unsealed	12018951	yes
12047767		150 Metri-Pack Series - Unsealed	12018951	yes
12048074		150 Metri-Pack Series - Sealed	12012249	yes
12048159		280 Metri-Pack Series - Sealed	12012249	yes
12048254		280 Metri-Pack Series - Sealed	12012249	yes
12048450		480 Metri-Pack Series - Unsealed	12039880	no
12048451		480 Metri-Pack Series - Unsealed	12039880	no
12052139		480 Metri-Pack Series - Unsealed	12039880	no
12052172		480 Metri-Pack Series - Unsealed	12039969	no
12052217		280 Metri-Pack Series - Unsealed	12018253	yes
12052219		480 Metri-Pack Series - Unsealed	12018253	yes
12052221		480 Metri-Pack Series - Unsealed	12018253	yes
12052222		630 Metri-Pack Series - Unsealed	12018253	yes
12052224		630 Metri-Pack Series - Unsealed	12018253	yes
12052225		630 Metri-Pack Series for Relay application - Unsealed	12018253	yes
12052227		630 Metri-Pack Series for Relay application - Unsealed	12018253	yes
12052455		630 Metri-Pack Series - Sealed	12039880	no
12052456		630 Metri-Pack Series - Sealed	12039880	no
12052457		630 Metri-Pack Series - Sealed	12039880	no
12052826		630 Metri-Pack Series - Unsealed	12018253	yes
12052827		480 Metri-Pack Series - Unsealed	12018253	yes
12059894		150 Metri-Pack Series - Unsealed	12018951	yes
12064734		630 Metri-Pack Series - Sealed	12039969	no
12064735		630 Metri-Pack Series - Sealed	12039969	no
12064736		630 Metri-Pack Series - Sealed	12039969	no
12064737		630 Metri-Pack Series - Sealed	12039969	no
12064971		150 Metri-Pack Series - Unsealed	12018951	yes
12065196		480 Metri-Pack Series - Unsealed	12039969	no
12065197		480 Metri-Pack Series - Unsealed	12039969	no
12065892		480 Metri-Pack Series for Relay application - Unsealed	12040128	yes
12065893		480 Metri-Pack Series for Relay application - Unsealed	12040128	yes
12065894		480 Metri-Pack Series for Relay application - Unsealed	12040128	yes
12065915		800 MAXI Fuse - Unsealed	12071239	yes

NOTE: Specifications in this catalog are for general reference only and are subject to change without notice. To verify product information, please contact a Delphi representative.

Peters de Laet
503-661-5088 – phone 503-661-5328 – fax
www.pdel.com

Terminal/Crimp Applicator Cross Reference

Part Number	After Termination Part Number	Terminal Description	Speed-O-Matic Die Part Number	E-Z Pack Die Available
12065916		800 MAXI Fuse - Unsealed	12071239	yes
12065918		800 MAXI Fuse - Unsealed	12071239	yes
12066214		280 Metri-Pack Series - Unsealed	12018253	yes
12066269		480 Metri-Pack Series - Unsealed	12018253	yes
12066271		280 Metri-Pack Series - Unsealed	12018253	yes
12066454		630 Metri-Pack Series - Unsealed	12018253	yes
12066493		630 Metri-Pack Series - Unsealed	12018253	yes
12066614		630 Metri-Pack Series - Pull-To-Seat - Sealed	12018253	yes
12066638		W2-W3 Lamp Socket Series - Sealed	12012249	yes
12066639		W2-W3 Lamp Socket Series - Sealed	12012249	yes
12077411		280 Metri-Pack Series - Sealed	12012249	yes
12077413		280 Metri-Pack Series - Sealed	12012249	yes
12077628		150 Metri-Pack Series - Sealed	12012249	yes
12077939		280 Metri-Pack Series - Pull-To-Seat - Sealed	12018951	yes
12084200		150 Metri-Pack Series - Sealed	12012249	yes
12084201		280 Metri-Pack Series - Sealed	12012249	yes
12084449		100 Micro-Pack Series - Unsealed	12039723	no
12084586		280 Metri-Pack Series - Unsealed	12018253	yes
12084588		630 Metri-Pack Series for Relay application - Unsealed	12018253	yes
12084590		630 Metri-Pack Series - Unsealed	12018253	yes
12084595		480 Metri-Pack Series - Unsealed	12018253	yes
12084596		630 Metri-Pack Series - Unsealed	12018253	yes
12084912		100W Micro-Pack Series - Sealed	12040128	yes
12084913		100W Micro-Pack Series - Sealed	12040128	yes
12089040		Weather-Pack Series - Sealed	12012249	yes
12089188		Weather-Pack Series - Sealed	12012249	yes
12089236		480 Metri-Pack Series for Relay application - Unsealed	12040128	yes
12089307		Weather-Pack Series - Sealed	12012249	yes
12092444		800 MAXI Fuse - Unsealed	12071239	yes
12092445		800 MAXI Fuse - Unsealed	12071239	no
12103360		280 Metri-Pack Series - Pull-To-Seat - Sealed	12018951	yes
12103501		Ring - Unsealed	06286013	no
12103502		Ring - Unsealed	06286013	no
12103503		Ring - Unsealed	06286013	no
12103504		Ring - Unsealed	06286013	no
12103505		Ring - Unsealed	06286013	no
12103506		Ring - Unsealed	06286013	no
12103507		Ring - Unsealed	06286013	no
12103508		Ring - Unsealed	06286013	no
12103509		Ring - Unsealed	06286013	no
12103510		Ring - Unsealed	06286013	no
12103511		Ring - Unsealed	06286013	no
12103512		Ring - Unsealed	08910204	no
12103513		Ring - Unsealed	08910204	no
12103514		Ring - Unsealed	08910162	no
12103515		Ring - Unsealed	08910162	no
12103516		Ring - Unsealed	08910162	no
12103517		Ring - Unsealed	06292518	no
12103518		Ring - Unsealed	06292518	no
12103519		Ring - Unsealed	06292518	no
12103520		Ring - Unsealed	06292518	no
12103948		480 Metri-Pack Series for Relay application - Unsealed	12040128	yes
12103965		Ring - Unsealed	06286013	no
12110127		800 MAXI Fuse - Unsealed	12071239	yes
12110128		800 MAXI Fuse - Unsealed	12071239	yes
12110644	12110648	280 Metri-Pack Series - 1 way Bus Bar -Tangless - Unsealed	12118476	no
12110645	12110649	280 Metri-Pack Series - 1 way Bus Bar -Tangless - Unsealed	12118476	no
12110645	12110650	280 Metri-Pack Series - 2 way Bus Bar -Tangless - Unsealed	12118477	no
12110645	12110651	280 Metri-Pack Series - 3 way Bus Bar -Tangless - Unsealed	12118477	no
12110646	12110652	280 Metri-Pack Series - 1 way Bus Bar -Tangless - Unsealed	12118476	no

NOTE: Specifications in this catalog are for general reference only and are subject to change without notice. To verify product information, please contact a Delphi representative.

Peters de Laet
503-661-5088 – phone 503-661-5828 – fax
www.pdel.com

Terminal/Crimp Applicator Cross Reference

Part Number	After Termination Part Number	Terminal Description	Speed-O-Matic Die Part Number	E-Z Pack Die Available
12110646	12110653	280 Metri-Pack Series - 2 way Bus Bar -Tangless - Unsealed	12118477	no
12110646	12110654	280 Metri-Pack Series - 3 way Bus Bar -Tangless - Unsealed	12118477	no
12110646	12110655	280 Metri-Pack Series - 4 way Bus Bar -Tangless - Unsealed	12118477	no
12110646	12110656	280 Metri-Pack Series - 5 way Bus Bar -Tangless - Unsealed	12118477	no
12110647	12110657	280 Metri-Pack Series - 1 way Bus Bar -Tangless - Unsealed	12118476	no
12110647	12110658	280 Metri-Pack Series - 2 way Bus Bar -Tangless - Unsealed	12118477	no
12110647	12110659	280 Metri-Pack Series - 3 way Bus Bar -Tangless - Unsealed	12118477	no
12110647	12110660	280 Metri-Pack Series - 4 way Bus Bar -Tangless - Unsealed	12118477	no
12110647	12110661	280 Metri-Pack Series - 5 way Bus Bar -Tangless - Unsealed	12118477	no
12110662	12110663	280 Metri-Pack Series - 1 way Bus Bar -Tangless - Unsealed	12118476	no
12110664	12110665	280 Metri-Pack Series - 1 way Bus Bar -Tangless - Unsealed	12118476	no
12110685	12110686	280 Metri-Pack Series - 1 way Bus Bar -Tangless - Unsealed	12118476	no
12110700		800 MAXI Fuse - Unsealed	12071239	no
12110708	12110711	280 Metri-Pack Series - 2 way Bus Bar - Unsealed	12118477	no
12110708	12110712	280 Metri-Pack Series - 3 way Bus Bar - Unsealed	12118477	no
12110709	12110713	280 Metri-Pack Series - 2 way Bus Bar - Unsealed	12118477	no
12110709	12110714	280 Metri-Pack Series - 3 way Bus Bar - Unsealed	12118477	no
12110709	12110715	280 Metri-Pack Series - 4 way Bus Bar - Unsealed	12118477	no
12110709	12110716	280 Metri-Pack Series - 5 way Bus Bar - Unsealed	12118477	no
12110710	12110717	280 Metri-Pack Series - 2 way Bus Bar - Unsealed	12118477	no
12110710	12110718	280 Metri-Pack Series - 3 way Bus Bar - Unsealed	12118477	no
12110710	12110719	280 Metri-Pack Series - 4 way Bus Bar - Unsealed	12118477	no
12110710	12110720	280 Metri-Pack Series - 5 way Bus Bar - Unsealed	12118477	no
12110842		280 Metri-Pack Series -Tangless - Unsealed	12018253	yes
12110843		280 Metri-Pack Series -Tangless - Unsealed	12018253	yes
12110844		280 Metri-Pack Series -Tangless - Unsealed	12018253	yes
12110845		280 Metri-Pack Series -Tangless - Sealed	12012249	yes
12110846		280 Metri-Pack Series -Tangless - Sealed	12012249	yes
12110847		280 Metri-Pack Series -Tangless - Sealed	12012249	yes
12110853		280 Metri-Pack Series -Tangless - Sealed	12012249	yes
12124075		150.2 Metri-Pack Series - Pull-To-Seat - Sealed	12040128	yes
12124076		150.2 Metri-Pack Series - Pull-To-Seat - Sealed	12040128	yes
12124304		480 Metri-Pack Series - Unsealed	12018253	yes
12124471		W-2 Lamp Socket Series - Sealed	12071239	yes
12124512		56 Series - Unsealed	12018253	yes
12124513		56 Series - Unsealed	12018253	yes
12124515		56 Series - Unsealed	12018253	yes
12124517		56 Series - Unsealed	12018253	yes
12124518		56 Series - Unsealed	12018253	yes
12124519		56 Series - Unsealed	12018253	yes
12124520		56 Series - Unsealed	12018253	yes
12124522		56 Series - Unsealed	12018253	yes
12124523		56 Series - Unsealed	12018253	yes
12124559		630 Metri-Pack Series for Relay application - Unsealed	12018253	yes
12124580		Weather-Pack Series - Sealed	12012249	yes
12124581		Weather-Pack Series - Sealed	12012249	yes
12124582		Weather-Pack Series - Sealed	12012249	yes
12124587		Weather-Pack Series - Sealed	12012249	yes
12124598		W-2 Lamp Socket Series - Sealed	none	yes
12124977		280 Metri-Pack Series - Sealed	12012249	no
12129052		B1-C2 Lamp Socket Series - Sealed	12118726	no
12129053		B1-C2 Lamp Socket Series - Sealed	12012249	yes
12129061		280 Metri-Pack Series -Tangless - Unsealed	12018253	yes
12129373		150 Metri-Pack Series -Tangless - Unsealed	12018951	yes
12129409		280 Metri-Pack Series -Tangless - Sealed	12012249	yes
12129424		280 Metri-Pack Series -Tangless - Unsealed	12018253	yes
12129425		280 Metri-Pack Series -Tangless - Unsealed	12018253	yes
12129484		150 Metri-Pack Series -Tangless - Unsealed	12018951	no
12129493		280 Metri-Pack Series - Sealed	12012249	yes

NOTE: Specifications in this catalog are for general reference only and are subject to change without notice. To verify product information, please contact a Delphi representative.

Peters de Laet
503-661-5088 – phone 503-661-5328 – fax
www.pdel.com

Terminal/Crimp Applicator Cross Reference

Part Number	After Termination Part Number	Terminal Description	Speed-O-Matic Die Part Number	E-Z Pack Die Available
12129494		280 Metri-Pack Series - Unsealed	12018253	yes
12129497		280 Metri-Pack Series - Sealed	12012249	yes
12129498		280 Metri-Pack Series - Unsealed	12018253	yes
12129663		280 Metri-Pack Series -Tangless - Unsealed	12018253	yes
12146447		100 Micro-Pack Series - Unsealed	12018951	no
12146448		100 Micro-Pack Series - Unsealed	12018951	no
12160222		150 Metri-Pack Series - Sealed	12012249	yes
12160223		150 Metri-Pack Series - Sealed	12012249	yes
12160635	12160643	280 Metri-Pack Series - 1 way Bus Bar - Unsealed	12095585	no
12160635	12160648	280 Metri-Pack Series - 2 way Bus Bar - Unsealed	12014021	no
12160635	12160652	280 Metri-Pack Series - 3 way Bus Bar - Unsealed	12014021	no
12160635	12160657	280 Metri-Pack Series - 4 way Bus Bar - Unsealed	12014021	no
12160635	12160660	280 Metri-Pack Series - 5 way Bus Bar - Unsealed	12014021	no
12160635	12160662	280 Metri-Pack Series - 6 way Bus Bar - Unsealed	12014021	no
12160636	12160644	280 Metri-Pack Series - 1 way Bus Bar - Unsealed	12095585	no
12160636	12160649	280 Metri-Pack Series - 2 way Bus Bar - Unsealed	12014021	no
12160636	12160653	280 Metri-Pack Series - 3 way Bus Bar - Unsealed	12014021	no
12160636	12160658	280 Metri-Pack Series - 4 way Bus Bar - Unsealed	12014021	no
12160636	12160661	280 Metri-Pack Series - 5 way Bus Bar - Unsealed	12014021	no
12160637	12160645	280 Metri-Pack Series - 1 way Bus Bar - Unsealed	12095585	no
12160637	12160650	280 Metri-Pack Series - 2 way Bus Bar - Unsealed	12014021	no
12160637	12160654	280 Metri-Pack Series - 3 way Bus Bar - Unsealed	12014021	no
12160638	12160646	280 Metri-Pack Series - 1 way Bus Bar - Unsealed	12095585	no
12160638	12160655	280 Metri-Pack Series - 3 way Bus Bar - Unsealed	12014021	no
12160640	12160663	280 Metri-Pack Series - 1 way Bus Bar - Unsealed	12095585	no
12160640	12160664	280 Metri-Pack Series - 3 way Bus Bar - Unsealed	12014021	no
12160641	12160665	280 Metri-Pack Series - 1 way Bus Bar - Unsealed	12095585	no
12160641	12160666	280 Metri-Pack Series - 2 way Bus Bar - Unsealed	12014021	no
12160642	12160667	280 Metri-Pack Series - 1 way Bus Bar - Unsealed	12095585	no
12161184		150.2 Metri-Pack - Pull-To-Seat - Sealed	12040128	yes
12162098		Ring - Unsealed	06286013	no
12162099		Ring - Unsealed	06286013	no
12162100		Ring - Unsealed	06286013	no
12162595		280 Metri-Pack Series - Unsealed	12018253	yes
12162596		280 Metri-Pack Series - Unsealed	12018253	yes
12162597		280 Metri-Pack Series - Unsealed	12018253	yes
12186320		W2-W3 Lamp Socket Series - Sealed	12012249	yes
12191811		GT 150 - Unsealed	none	yes
12191812		GT 150 - Unsealed	none	yes
12191818		GT 150 - Sealed	none	yes
12191819		GT 150 - Sealed	none	yes
15304621		B1-C2 Lamp Socket Series - Sealed	12012249	yes
15304622		B1-C2 Lamp Socket Series - Sealed	12118726	no
15304701		GT 150 - Unsealed	12040128	yes
15304702		GT 150 - Unsealed	12040128	yes
15304706		GT 150 - Sealed	12012249	yes
15304707		GT 150 - Sealed	12012249	yes
15304710		GT 280 - Unsealed	12040128	yes
15304711		GT 280 - Unsealed	12040128	yes
15304712		GT 280 - Unsealed	12040128	yes
15304715		GT 280 - Sealed	12012249	yes
15304716		GT 280 - Sealed	12012249	yes
15304717		GT 280 - Sealed	12012249	yes
15304722		GT 280 - Unsealed	12040128	yes
15304723		GT 280 - Unsealed	12040128	yes
15304724		GT 280 - Unsealed	12040128	yes
15304727		GT 280 - Sealed	12012249	yes
15304728		GT 280 - Sealed	12012249	yes
15304729		GT 280 - Sealed	12012249	yes

NOTE: Specifications in this catalog are for general reference only and are subject to change without notice. To verify product information, please contact a Delphi representative.

Peters de Laet
503-661-5088 – phone 503-661-5328 – fax
www.pdel.com

Peters de Laet
503-661-5088 – phone 503-661-5328 – fax
www.pdel.com

Abbreviations

ABS ..... *Acrylonitrile Butadiene Styrene*
amps ..... *Amperes*
App ..... *Application*
˚C ..... *Degrees Centigrade*
cm ..... *Centimeter*
CM..... *Combination Module*
CPA ..... *Connector Position Assurance*
dc ..... *Direct Current*
DIN ..... *Deutsche Industry Norm (Standard)*
Dk ..... *Dark*
DS ..... *Double Spring*
EPDM ..... *Ethylene Propylene Diene Monomer*
EMS ..... *Engine Management Systems*
˚F ..... *Degrees Fahrenheit*
F ..... *Female*
GB ..... *Glass Bead*
GF ..... *Glass Fiber*
g ..... *Grams*
GT ..... *Global Terminal*
H ..... *Height*
HS ..... *Heat Stabilized*
HVAC..... *Heating Ventilation Air Conditioning*
IM .....*Impact Modified*
I MLD ..... *Insert Molded*
ISO ..... *International Standards Organization*
JIS ..... *Japanese Industry Standard*
L ..... *Length*
LT ..... *Left*
Lt ..... *Light*
M ..... *Male*
Max ..... *Maximum*
Md ..... *Medium*
Min ..... *Minimum*
mm ..... *Millimeter*
MF ..... *Mineral Filled*
M/P ..... *Metri-Pack*
Mic/P ..... *Micro-Pack*
mV ..... *Millivolt*
mV/amp ..... *Millivolt per amp*
mW ..... *Milliwatts*
Nm ..... *Newtons Meter*
No. ..... *Number*
NPTF ..... *National Pipe Thread Fine*
NTC ..... *Negative Temperature Coefficient*
OBD ..... *On Board Diagnostics*
O.D. ..... *Outside Diameter*
PA6 .....*Polyamide 6*
PA12 ..... *Polyamide 12*
PA66 ..... *Polyamide 66*
PBT..... *Polybutylene Terephtalate (Polyester)*
P/C ..... *Printed Circuit*
PC ..... *Polycarbonate*
PEI ..... *Polyetherimide*
PET..... *Polyethylene Terephtalate Polyester*
PLR ..... *Primary Lock Reinforcement*
PP ..... *Polypropylene*
PPE ..... *Polyphenylene Ether*
PVC ..... *Polyvinyl Chloride*
Ref ..... *Reference*
RT ..... *Right*
SAE ..... *Society of Automotive Engineers*
SM..... *Single Module*
SST..... *Stainless Steel*
TF ..... *Talc Filled*
TEEE..... *Hytrel*
Temp ..... *Temperature*
TEO 45A .....*Thermoplastic Polyester Olefinic*
TPA ..... *Terminal Position Assurance*
V ..... *Volt*
W .....*Width*
W/P ..... *Weather-Pack*

Black 100% - Pg Nos

DIN Cable
Rated Cross Section

Primary Cable (mm^2)	Battery Cable (mm^2)
0.22	10
0.35	16
0.5	25
0.75	35
1	50
1.5	70
2.5	95
4	120
6	

SAE Cable
Rated Cross Section

Battery Cable Range Conversion

Metric Size mm^2	SAE Gauge
13.0	6
19.0	4
32.0	2
40.0	1
50.0	0
62.0	2/0

Primary Cable Range Conversion

Metric Size mm^2	SAE Gauge
0.22	24
0.35	22
0.50	20
0.80	18
1.00	16
2.00	14
3.00	12
5.00	10
8.00	8

Peters de Laet
503-661-5088 – phone 503-661-5328 – fax
www.pdel.com

Part #	Description	Page
02965019	Connector 4F 56 Series	9.11
02965977	Connector 8F 56 Series	9.12
02973385	Connector 2F 56 Series	9.11
02973407	Connector 2F 56 Series	9.10
02984017	Connector 6F 56 Series	9.12
02984959	Connector 3F 56 Series	9.11
06285847	Crimp Tool	10.6
08900863	Connector 2F 56 Series	9.10
08905563	Clip Connector Rosebud	9.14
08905790	Connector 3F 56 Series	9.11
10714774	Terminal Removal Tool	10.11
10714792	Terminal Removal Tool	10.11
10717452	Clip	9.14
10717456	Seal Cable	9.9
10717689	Connector 20M Ducon 1.5, 2.8, 4.8 Sealed	5.23
10717711	Connector 12F Ducon 4.8	5.15
10717812	Secondary Lock	7.20
10717815	Conduit TPA Cap Ducon 2.8	5.12
10717826	Secondary Lock	5.15
10717827	Secondary Lock	5.15
10717837	CPA Ducon	5.28
10717849	TPA Ducon	5.28
10717927	Terminal F Ducon 4.8 Sealed	5.20
10717928	Terminal F Ducon 0.8 Sealed	5.24
10717964	Terminal F Ducon 1.5 Sealed	5.20
10718038	Hinge	7.20
10718234	Seal Cable	9.9
10718620	Fuse Module	7.22
10718621	Relay Module	7.22
10719204	Fixing Clip	9.15
10719332	Standard Bridging Relay	7.27
10719337	Conduit TPA M/P 150	2.15
10719339	Conduit TPA M/P 150	2.17
10719968	Clip Adapter	7.27
10719975	Four Position Carrier	9.16
10719976	Holder	7.23
10720007	Tube Clip	9.14
10720017	Module Cover	7.22
10720018	Module Cover	7.22
10720085	Eight Position Carrier	9.16
10720611	Seal Cable	9.9
10720613	Seal Cable	9.9
10720615	Seal Cable	9.9
10720617	Plug Cavity	9.9
10720641	Seal Cable	9.8
10720769	Seal Cable, Ducon	5.10
10720851	Seal Cable	6.26
10720907	Plug Cavity	9.9
10720941	Seal Cable	9.8
10720950	Seal Cable	9.8
10720983	Seal Cable	9.9
10724374	Terminal M Ducon 1.5 Sealed	5.21
10724435	Terminal M Ducon 4.8 Sealed	5.21
10724459	Terminal M Ducon 0.8 Sealed	5.25
10728148	TMS Cover	5.28
10730124	Plug Cavity Ducon 2.8	5.11
10730240	Seal Cable	5.16
10730241	Seal Cable	5.16
10730244	Connector 40M Ducon Sealed	5.28
10731090	Seal Cable	9.8
10731091	Seal Cable	9.8
10731103	Seal Cable	9.9
10733034	Seal Cable	9.9
10733035	Seal Cable	9.9
10737670	Seal Cable	9.8
10737671	Seal Cable	9.8
10739582	Terminal Removal Tool	10.10
10739583	Terminal Removal Tool	10.10
10739584	Terminal Removal Tool	10.10
10739585	Terminal Removal Tool	10.11
10739605	Terminal Removal Tool	10.10
10740396	Connector 15M Ducon 2.8, 4.8 Sealed	5.22
10740397	Conduit TPA M/P 150	2.14
10740403	Connector 9F Ducon 4.8	5.15
10740404	Secondary Lock	5.15
10740405	Five Position Carrier	9.16
10740407	Standard Bridging Relay	7.27
10740408	Standard Bridging Relay	7.27
10740409	Power Bridging Relay	7.27
10740410	Standard Bridging Relay	7.27
10740413	Connector Assembly 15F VF	6.25
10740483	Fuseblock	7.20
10740484	Secondary Lock	7.20
10740485	Secondary Lock	7.20
10740486	Relay Block	7.21
10740487	TPA	7.21
12004189	Battery Spacer	9.6
12004267	Connector 1F 56 Series	9.10
12004327	Connector 5F 56 Series	9.12
12010300	Plug Cavity 1W M/P 280 & W/P	2.31
12010852	Secondary Lock W/P	6.21
12010973	Connector 2M W/P Sealed	6.18
12010996	Connector 1M W/P Sealed	6.18
12014012	Terminal Removal Tool	10.8
12014254	Crimp Tool	10.6
12015024	Connector 4M W/P Sealed	6.19
12015284	M/P 280 Cable Seal	2.30
12015306	Connector 1F 56 Series	9.10
12015359	M/P 280 Cable Seal	2.30
12015360	M/P 280 Cable Seal	2.30
12015510	Secondary Lock M/P Mixed	2.84
12015511	Secondary Lock M/P Mixed	2.84
12015664	Connector 4F M/P 630	2.55
12015791	Connector Assembly 1F W/P	6.18
12015792	Connector Assembly 2F W/P	6.18
12015798	Connector Assembly 4F W/P	6.19
12015858	Terminal F M/P 280	2.24
12015860	Terminal F M/P 480	2.42
12015864	Terminal F M/P 630	7.5
12015865	Terminal F M/P 630	7.5
12015869	Terminal F M/P 630	2.52
12015870	Terminal F M/P 630	2.52
12015952	Connector 1F M/P 480	2.44
12015987	Connector 1M M/P 480	2.44
12018256	Hand Tool Stripper	10.13
12018777	Crimp Tool	10.6
12020014	Connector 3F M/P 280, 480	2.70
12020035	Terminal F M/P 630	2.52
12020116	Terminal M M/P 280	2.25
12020119	Terminal M M/P 480	2.43
12020120	Terminal M M/P 480	2.43
12020125	Terminal M M/P 630	2.53
12020126	Terminal M M/P 630	2.53
12020156	Terminal F M/P 630 Pull-To-Seat	2.56
12020365	Terminal M M/P 630	2.53
12020366	Terminal F M/P 480	2.42
12020629	Connector 17M M/P 280, 480, 630	2.84
12020720	Gasket Lamp Socket	6.2
12020782	Terminal M M/P 280	2.25
12020784	Terminal M M/P 480	2.43
12020786	Connector 6M W/P	6.20
12020801	Terminal F W/P Sealed	6.16
12020807	TPA M/P 280	2.32
12020827	Connector 3M W/P	6.19
12020829	Connector Assembly 3F W/P	6.19
12020830	Connector 4M W/P	6.20
12020832	Connector Assembly 4F W/P	6.20
12020833	CPA Perpendicular M/P & W/P	2.14
12020926	Connector Assembly 6F W/P	6.20
12031876	Terminal Removal Tool	10.8
12033731	Cover Inline AutoFuse	7.30
12033769	Connector Assembly 2F M/P 630 Pull-To-Seat	2.58
12033820	Terminal M M/P 480	2.43
12033871	Connector 5F M/P 630	7.26
12033872	TPA M/P 630	7.10
12033972	Terminal M M/P 630	2.53
12033997	Terminal F M/P 630 Pull-To-Seat	2.56
12034003	Connector 5F M/P 630	7.26
12034046	Terminal F M/P 280	2.24
12034047	Terminal M M/P 280	2.25
12034061	Connector 6F M/P 480	2.49
12034074	Connector 2M W/P	6.18
12034145	TPA M/P 280	2.33
12034170	Seal Cable	9.9
12034269	Connector 2M M/P 630	2.58
12034363	TPA M/P 630	2.58
12034364	Seal Cable 2M M/P 630	2.58
12034365	M/P 280 Cable Seal	2.30
12034396	Connector Header Assembly 60M M/P 150	2.102
12034413	Plug Seal Cable 1W	2.101
12039500	Crimp Tool	10.6
12040070	Crimp Tool	10.6
12040780	Flange Seal	2.102
12040902	Terminal M MIC/P 100	3.3
12040903	Connector 4M MIC/P 100	3.4
12040905	Connector 9M MIC/P 100	3.5
12040923	Connector Header Assembly 18M M/P 150	2.100
12040938	Seal Connector 18M M/P 150	2.100
12040977	Connector Assembly 3F M/P 280 Sealed	2.33
12041301	Connector 8F M/P 280	2.37
12041352	M/P 280 Cable Seal	2.30
12045681	Connector 3M M/P 280, 480	2.70
12045688	Connector 8M M/P 150	2.10
12045689	TPA M/P 150	2.10
12045690	TPA M/P 150	2.10
12045699	TPA M/P 630	2.59
12045773	Terminal M M/P 150 Sealed	2.13
12045808	Connector 10M M/P 150 Sealed	2.17
12045889	TPA MIC/P 100	3.17
12045890	TPA MIC/P 100	3.17
12045897	Secondary Lock M/P 150, 280	2.77
12047531	Connector 10F MIC/P 100	3.6
12047581	Terminal M M/P 150	2.3
12047662	Connector 2F M/P 150	2.4
12047663	Connector 2M M/P 150	2.4
12047665	TPA M/P 150	2.4
12047682	Connector 1F M/P 150	2.4
12047683	Connector 1M M/P 150	2.4
12047751	Secondary Lock M/P 150, 280	2.86
12047767	Terminal F M/P 150	2.2
12047781	Connector 3F M/P 150	2.5
12047782	Connector 3M M/P 150	2.5
12047783	TPA M/P 150	2.5
12047784	TPA M/P 150	2.5
12047785	Connector 4F M/P 150	2.6
12047786	Connector 4M M/P 150	2.6
12047787	TPA M/P 150	2.6
12047814	Connector 10M MIC/P 100	3.6

Peters de Laet
503-661-5088 – phone 503-661-5328 – fax
www.pdel.com

Part #	Description	Page
12047815	Connector 5M MIC/P 100	3.4
12047829	Connector 5M MIC/P 100	3.4
12047835	Clip Connector	9.13
12047886	Connector 8F M/P 150	2.10
12047900	TPA MIC/P 100	3.16
12047901	TPA MIC/P 100	3.16
12047931	Connector 8M M/P 150 Sealed	2.16
12047933	Connector 7M M/P 150 Sealed	2.16
12047937	Connector Assembly 8F M/P 150 Sealed	2.16
12047938	Connector Assembly 7F M/P 150 Sealed	2.16
12047948	TPA M/P 150	2.15
12048074	Terminal F M/P 150 Sealed	2.12
12048159	Terminal M M/P 280 Sealed	2.31
12048254	Terminal M M/P 280 Sealed	2.31
12048344	TPA MIC/P 100	3.14
12048345	TPA MIC/P 100	3.14
12048412	Connector Assembly 4F M/P 480 Sealed	2.50
12048413	TPA M/P 480	2.50
12048433	Assembly Seal Cable M/P 480	2.46
12048450	Terminal F M/P 480 Sealed	2.46
12048451	Terminal F M/P 480 Sealed	2.46
12048453	Connector Assembly 30M M/P 150	2.100
12048456	Seal Connector 30M M/P 150	2.100
12052130	Connector Header Assembly 48M M/P 150	2.101
12052131	Flange Seal	2.101
12052139	Terminal F M/P 480 Sealed	2.46
12052172	Terminal M M/P 480 Sealed	2.47
12052189	Connector 10M M/P 150 Sealed	2.17
12052199	TPA 7W M/P 150, 480	2.75
12052200	Connector 7M M/P 150, 480 Sealed	2.75
12052217	Terminal F M/P 280	2.24
12052219	Terminal F M/P 480	2.42
12052221	Terminal F M/P 480	2.42
12052222	Terminal F M/P 630	2.52
12052224	Terminal F M/P 630	2.52
12052225	Terminal F M/P 630	7.5
12052227	Terminal F M/P 630	7.5
12052287	Connector Assembly 5F M/P 280, 630 Sealed	2.77
12052290	TPA M/P Mixed	2.77
12052452	M/P 480 Cable Seal	2.46
12052453	M/P 480 Cable Seal	2.46
12052455	Terminal F M/P 630 Sealed	2.56
12052456	Terminal F M/P 630 Sealed	2.56
12052457	Terminal F M/P 630 Sealed	2.56
12052480	Connector 5M M/P 150 Sealed	2.16
12052486	TPA M/P 150, 480	2.75
12052490	TPA Lamp Socket	6.6
12052600	Connector Assembly 5F M/P 150 Sealed	2.16
12052613	Connector Assembly 2F M/P 480 Sealed	2.48
12052623	Connector 4M M/P 630	2.55
12052634	TPA M/P 150	2.14
12052641	Connector Assembly 2F M/P 150 Sealed	2.14
12052644	Connector Assembly 2F M/P 150 Sealed	2.14
12052816	TPA M/P 280	2.38
12052826	Terminal M M/P 630	2.53
12052827	Terminal M M/P 480	2.43
12052832	Connector 2F M/P 150	2.5
12052833	Connector 2M M/P 150	2.5
12052834	CPA Axial M/P	2.5
12052845	TPA M/P 150	2.14
12052848	Connector Assembly 6F M/P 150 Sealed	2.16
12052850	TPA M/P 150	2.16
12052854	Connector 7F M/P 280	2.37
12052856	Connector 4F M/P 280	2.37
12052898	TPA M/P 150	2.21
12052924	M/P 150 Cable Seal	2.12
12052925	M/P 150 Cable Seal	2.12
12052931	M/P 480 Cable Seal	2.46
12052978	Connector 6F 56 Series	9.12
12059160	TPA MIC/P 100	3.4
12059168	Plug Cavity 1W M/P 150, MIC/P & GT	1.39
12059195	TPA M/P 280	2.38
12059249	Connector 2F M/P 150	2.4
12059250	Connector 2M M/P 150	2.4
12059255	Plug Cavity 1W M/P 630	2.57
12059257	M/P 630 Cable Seal	2.56
12059258	M/P 630 Cable Seal	2.56
12059259	M/P 630 Cable Seal	2.56
12059260	M/P 630 Cable Seal	2.56
12059296	Connector 5F M/P 480	2.49
12059297	Secondary Lock M/P 480	2.49
12059426	Cover Connector M/P 630 Pull-to-Seat	7.30
12059450	Connector 2M M/P 280 Sealed	2.32
12059472	Connector Assembly 7F M/P 150, 480 Sealed	2.75
12059573	Connector Assembly 6F M/P 280 Sealed	2.38
12059800	Connector 5F M/P 150	2.20
12059801	TPA M/P 150	2.20
12059860	TPA M/P 480	2.45
12059894	Terminal M M/P 150	2.3
12059897	TPA M/P 480	2.48
12059952	Lamp Socket - Wedge Base W2	6.6
12064734	Terminal M M/P 630 Sealed	2.57
12064735	Terminal M M/P 630 Sealed	2.57
12064736	Terminal M M/P 630 Sealed	2.57
12064737	Terminal M M/P 630 Sealed	2.57
12064749	Connector 2F M/P 480	2.45
12064750	Connector 2M M/P 480	2.45
12064751	TPA M/P 480	2.45
12064752	Connector 6F M/P 280	2.28
12064753	TPA M/P 280	2.28
12064754	Connector 6M M/P 280	2.28
12064755	TPA M/P 280	2.28
12064758	Connector 3F M/P 150	2.6
12064759	Connector 3M M/P 150	2.6
12064760	Connector 4F M/P 150	2.7
12064761	Connector 4M M/P 150	2.7
12064762	Connector 6F M/P 150	2.9
12064763	Connector 6M M/P 150	2.9
12064764	TPA 3W M/P 150	2.9
12064765	TPA M/P 150	2.9
12064766	Connector 8F M/P 150	2.10
12064767	Connector 8M M/P 150	2.10
12064768	TPA M/P 150	2.10
12064769	Connector 10F M/P 150	2.11
12064770	Connector 10M M/P 150	2.11
12064771	TPA M/P 150	2.11
12064772	TPA M/P 150	2.11
12064798	Connector Header Assembly 12M MIC/P 100	3.12
12064799	Connector 12F MIC/P 100	3.12
12064822	TPA MIC/P 100	3.12
12064823	TPA MIC/P 100	3.12
12064834	Secondary Lock M/P 150,280,480,630	2.94
12064835	Secondary Lock M/P 150,280,480,630	2.94
12064837	Seal Connector 36M M/P Mixed	2.94
12064860	Connector 6F M/P 150	2.20
12064861	TPA M/P 150	2.20
12064862	Connector 8F M/P 150	2.20
12064863	TPA M/P 150	2.20
12064971	Terminal F M/P 150	2.2
12064980	Connector 9F MIC/P 100	3.5
12064982	Connector 5F MIC/P 100	3.4
12064983	Connector 5F MIC/P 100	3.4
12064986	TPA MIC/P 100	3.5
12064987	TPA MIC/P 100	3.4
12064989	CPA Axial MIC/P	3.4
12064993	Connector 6F MIC/P 100	3.10
12064998	Connector 8F M/P 280	2.29
12064999	TPA M/P 280	2.29
12065141	TPA M/P 280	2.29
12065171	Connector 1M M/P 280 Sealed	2.32
12065172	Connector Assembly 1F M/P 280 Sealed	2.32
12065196	Terminal M M/P 480 Sealed	2.47
12065197	Terminal M M/P 480 Sealed	2.47
12065249	TPA M/P 280	2.32
12065266	Plug Seal Cable 1W	2.99
12065279	TPA M/P 280	2.32
12065298	Connector Assembly 4F M/P 150 SLD	2.21
12065422	Connector 3F M/P 150	2.5
12065423	Connector 3M M/P 150	2.5
12065425	Connector Assembly 10F M/P 150 SLD	2.17
12065426	Connector Assembly 10F M/P 150 Sealed	2.17
12065449	Assembly Terminal Ring & Washer	9.2
12065647	Connector Header Assembly 10M MIC/P 100	3.11
12065685	Connector Assembly 5F M/P 630 Pull-To-Seat	7.31
12065686	Connector Assembly 4F M/P 630 Pull-To-Seat	7.31
12065703	M/P 480 Cable Seal	2.46
12065785	Connector 10F MIC/P 100	3.15
12065847	Shroud	2.93
12065848	Secondary Lock M M/P Mixed	2.93
12065849	Seal Connector	2.93
12065863	Connector 2M M/P 480 Sealed	2.48
12065870	Connector Header Assembly 6M MIC/P 100	3.10
12065873	Connector 7F MIC/P 100	3.5
12065874	Connector 7M MIC/P 100	3.5
12065892	Terminal F M/P 480	7.5
12065893	Terminal F M/P 480	7.5
12065894	Terminal F M/P 480	7.5
12065915	Assembly Terminal F MAXI & Spring	7.6
12065916	Assembly Terminal F MAXI & Spring	2.62
12065918	Assembly Terminal F MAXI & Spring	7.6
12065930	Assembly Terminal 4F MAXI Bus Bar	7.6
12065943	TPA MIC/P 100	3.5
12066050	Secondary Lock 30F M/P Mixed	2.93
12066082	Plug Cavity 1W M/P 480	2.47
12066129	Cover	2.93
12066130	Connector 9F MIC/P 100	3.13
12066170	TPA MIC/P 100	3.10
12066176	TPA M/P 150	2.21
12066189	Connector 4F MIC/P 100	3.4
12066195	Connector 8M M/P 280	2.29
12066214	Terminal F M/P 280	2.24
12066269	Terminal M M/P 480	2.43
12066271	Terminal M M/P 280	2.25
12066304	TPA M/P 150	2.16

Peters de Laet
503-661-5088 – phone 503-661-5328 – fax
www.pdel.com

Part #	Description	Page
12066307	Connector Header Assembly 13M MIC/P 100	3.13
12066454	Terminal M M/P 630	2.53
12066493	Terminal M M/P 630	2.53
12066571	Connector 4F M/P 480	2.49
12066572	TPA M/P 480	2.49
12066590	Shroud	2.94
12066614	Terminal F M/P 630 Pull-To-Seat	2.56
12066638	Terminal Lamp Socket Wedge Base Sealed	6.3
12066639	Terminal Lamp Socket Wedge Base Sealed	6.3
12066681	Connector Assembly 2F M/P Pull-To-Seat	7.30
12070947	Crimp Tool	10.7
12070948	Crimp Tool	10.7
12071687	Crimp Tool	10.7
12075402	Insert Removal Tool	10.12
12077411	Terminal F M/P 280 Sealed	2.30
12077413	Terminal F M/P 280 Sealed	2.30
12077532	Secondary Lock	7.9
12077534	Electrical Center Base (1 Module)	7.15
12077538	Cover Fuseblock MAXI	7.9
12077563	Secondary Lock	7.9
12077569	Assembly Fuseblock MAXI	7.9
12077571	Convenience Center	7.10
12077572	Secondary Lock	7.10
12077591	Connector Assembly 5F M/P 150	2.21
12077628	Terminal M M/P 150 Sealed	2.13
12077760	M/P 630 Cable Seal	2.56
12077899	CPA Axial MIC/P	3.12
12077904	TPA M/P 280	2.38
12077939	Terminal F M/P 280.1 Pull-To-Seat	2.30
12084126	Connector Assembly 2F DS Sealed	6.27
12084149	Clip Connector Rosebud	9.13
12084185	Assembly Terminal Ring & Washer	9.2
12084200	Terminal F M/P 150 Sealed	2.12
12084201	Terminal F M/P 280 Sealed	2.30
12084449	Terminal M MIC/P 100	3.3
12084554	Assembly Terminal Ring & Washer	9.2
12084561	Clip Connector Rosebud	9.14
12084586	Terminal M M/P 280	2.25
12084588	Terminal F M/P 630	7.5
12084590	Terminal F M/P 630	2.52
12084595	Terminal F M/P 480	2.42
12084596	Terminal F M/P 630	2.52
12084673	TPA M/P 280	2.34
12084791	Fuse Extractor	7.18
12084890	Connector 5F M/P 280 Sealed	2.37
12084891	Connector Assembly 5F M/P 280	2.34
12084910	Electrical Center Base (1 Module)	7.14
12084912	Terminal Assembly F MIC/P 100W	3.24
12084913	Terminal Assembly F MIC/P 100W	3.24
12084944	Connector 16F MIC/P 100	3.14
12084945	Connector 16F MIC/P 100	3.14
12084948	Connector Assembly 16M MIC/P 100	3.14
12084949	Connector Assembly 16M MIC/P 100	3.14
12085030	Connector Assembly 2F M/P 630 Pull-To-Seat	7.30
12088187	Terminal Lamp Socket Wedge Base Sealed	6.3
12089040	Terminal M W/P Sealed	6.17
12089045	Assembly Terminal Ring & Washer	9.2
12089137	Terminal Lamp Socket Wedge Base	6.3
12089139	Terminal Lamp Socket Wedge Base	6.3
12089188	Terminal F W/P Sealed	6.16
12089236	Terminal F M/P 480	7.5
12089240	Assembly Terminal Ring & Washer	9.2
12089247	Connector 4M M/P 150 (Clip Slot)	2.6
12089248	Connector 4F M/P 150	2.6
12089263	Assembly Terminal Ring & Washer	9.2
12089290	Terminal F M/P 150 Pull-To-Seat	2.98
12089307	Terminal M W/P Sealed	6.17
12089442	Seal Cable 1W M/P 150	2.12
12089444	M/P 280 Cable Seal	2.30
12089496	Assembly Terminal Ring & Washer	9.2
12089852	Connector Header Assembly 20M MIC/P 100	3.15
12092030	Terminal Lamp Socket Ground Sealed	6.3
12092058	Terminal Lamp Socket Wedge Base Sealed	6.3
12092162	Connector 4F M/P 150	2.7
12092163	Connector 4M M/P 150	2.7
12092164	TPA M/P 150	2.7
12092220	MAXI Fuse Module	7.9
12092231	MAXI Fuse Module	7.9
12092252	TPA M/P 280	2.37
12092254	Connector 6F M/P 280	2.37
12092320	Connector Header Assembly 24M MIC/P 100W	3.26
12092328	Electrical Center Base (3 Modules)	7.15
12092332	Battery Terminal Cover	7.15
12092399	Connector 3F MAXI Fuse	2.65
12092400	Connector 3F MAXI Fuse	2.65
12092401	TPA M/P 800	2.65
12092444	Assembly Terminal F MAXI & Spring	2.62
12092445	Assembly Terminal F MAXI & Spring	2.62
12092507	Secondary Lock	7.8
12092605	Connector Assembly 4F M/P 630 Pull-To-Seat	7.31
12092669	Battery Terminal Cover	7.15
12092741	Electrical Center Base (3 Modules)	7.15
12092748	Position Assurance Device	7.18
12092844	TPA M/P 150	2.15
12092886	Connector Header Assembly 24M MIC/P 100	3.16
12094429	Terminal Removal Tool	10.8
12094430	Terminal Removal Tool	10.8
12094441	Secondary Lock & TPA Removal Tool	10.13
12103010	Terminal Battery Ring	9.4
12103014	Terminal Battery Ring	9.4
12103086	Assembly Terminal Ring & Washer	9.2
12103172	Connector Assembly 2F M/P 630	7.30
12103360	Terminal F M/P 280.1 Pull-To-Seat	2.30
12103501	Terminal Ring	9.3
12103502	Terminal Ring	7.6
12103503	Terminal Ring	9.3
12103504	Terminal Ring	7.6
12103505	Terminal Ring	9.3
12103506	Terminal Ring	7.6
12103507	Terminal Ring	9.3
12103508	Terminal Ring	7.6
12103509	Terminal Ring	9.3
12103510	Terminal Ring	9.3
12103511	Terminal Ring	7.6
12103512	Terminal Ring	7.6
12103513	Terminal Ring	7.6
12103514	Terminal Ring	7.6
12103515	Terminal Ring	9.3
12103516	Terminal Ring	9.3
12103517	Terminal Ring	9.3
12103518	Terminal Ring	9.3
12103519	Terminal Ring	9.3
12103520	Terminal Ring	9.3
12103784	Connector Assembly 2F W/P	6.18
12103881	Terminal F M/P 150 Pull-To-Seat	2.98
12103948	Terminal F M/P 480	7.5
12103965	Terminal Ring	7.6
12103974	Connector 5M M/P 150	2.15
12110041	Electrical Center Base (4 Modules)	7.15
12110043	Cover Module	7.8
12110054	TPA Lamp Socket	6.7
12110057	Connector 2F	7.28
12110058	Secondary Lock	7.28
12110075	Connector 6F M/P 280, 630	2.76
12110088	Connector 24F MIC/P 100	3.16
12110112	Connector 32F MIC/P 100	3.17
12110113	Connector 32F MIC/P 100	3.17
12110114	Connector 32F MIC/P 100	3.17
12110115	Connector 32F MIC/P 100	3.17
12110127	Assembly Terminal F MAXI & Spring	2.62
12110128	Assembly Terminal F MAXI & Spring	7.6
12110129	MAXI Fuse Assembly Module	7.9
12110155	Strain Relief 24F MIC/P 100W Right Hand	3.26
12110179	Connector Assembly 2F M/P 280.1 Pull-To-Seat	2.39
12110206	Connector 24F MIC/P 100	3.20
12110207	Connector 32F MIC/P 100	3.18
12110209	Connector Header Assembly 56M MIC/P 100	3.21
12110236	Terminal F M/P 150 Pull-To-Seat	2.98
12110241	Connector Header Assembly 56M MIC/P 100	3.21
12110244	Connector 24F MIC/P 100	3.20
12110245	Connector 32F MIC/P 100	3.21
12110246	Terminal Battery Ring	9.5
12110250	Connector 16F M/P 150 Tangless	2.18
12110252	Connector 16M M/P 150	2.18
12110254	Clip OBD II	2.18
12110259	Connector 16F MIC/P 100	3.14
12110261	Connector Assembly 16M MIC/P 100	3.14
12110290	Clip Connector Rosebud	9.13
12110293	Connector Assembly 3F M/P 150 Sealed	2.14
12110299	CPA MIC/P 100W	3.26
12110323	Connector Assembly 32M MIC/P 100	3.18
12110403	Seal Connector 24F MIC/P 100W	3.26
12110415	MAXI Fuse Assembly Module	7.9
12110440	Connector 4M M/P 280	2.106
12110446	Sensor Connector Assembly 2M M/P 150	8.3

Peters de Laet
503-661-5088 – phone 503-661-5328 – fax
www.pdel.com

Part #	Description	Page
12110485	Connector Assembly 36M MIC/P 100W	3.28
12110487	Connector 36F MIC/P 100W	3.28
12110488	Retainer 36F MIC/P 100W	3.28
12110489	Seal Cable 36F MIC/P 100W	3.28
12110490	Strain Relief 36F MIC/P 100W	3.28
12110517	Clip Connector Rosebud	9.13
12110539	Connector Assembly 5F M/P 280 FlexLock	7.30
12110540	TPA M/P 280	7.30
12110541	Connector 6F M/P 280 FlexLock	7.26
12110542	Secondary Lock	7.26
12110594	Convenience Center	7.12
12110595	Secondary Lock	7.12
12110602	Cover Convenience Center	7.12
12110626	Connector 8F M/P 280 FlexLock	2.106
12110644	Terminal 1F M/P 280 Bus Bar	7.5
12110645	Terminal 1F M/P 280 Bus Bar	7.5
12110646	Terminal 1F M/P 280 Bus Bar	7.5
12110647	Terminal 1F M/P 280 Bus Bar	7.5
12110648	Terminal 1F M/P 280 Bus Bar	7.5
12110649	Terminal 1F M/P 280 Bus Bar	7.5
12110650	Terminal 2F M/P 280 Bus Bar	7.5
12110651	Terminal 3F M/P 280 Bus Bar	7.5
12110652	Terminal 1F M/P 280 Bus Bar	7.5
12110653	Terminal 2F M/P 280 Bus Bar	7.5
12110654	Terminal 3F M/P 280 Bus Bar	7.5
12110655	Terminal 4F M/P 280 Bus Bar	7.5
12110656	Terminal 5F M/P 280 Bus Bar	7.5
12110657	Terminal 1F M/P 280 Bus Bar	7.5
12110658	Terminal 2F M/P 280 Bus Bar	7.5
12110659	Terminal 3F M/P 280 Bus Bar	7.5
12110660	Terminal 4F M/P 280 Bus Bar	7.5
12110661	Terminal 5F M/P 280 Bus Bar	7.5
12110662	Terminal 1F M/P 280 Bus Bar	7.5
12110663	Terminal 1F M/P 280 Bus Bar	7.5
12110664	Terminal 1F M/P 280 Bus Bar	7.5
12110665	Terminal 1F M/P 280 Bus Bar	7.5
12110685	Terminal 1F M/P 280 Bus Bar	7.5
12110686	Terminal 1F M/P 280 Bus Bar	7.5
12110698	Connector 6M M/P 800	2.65
12110700	Terminal M M/P 800 Tangless	2.63
12110708	Terminal 1F M/P 280 Bus Bar	7.4
12110709	Terminal 1F M/P 280 Bus Bar	7.4
12110710	Terminal 1F M/P 280 Bus Bar	7.4
12110711	Terminal 2F M/P 280 Bus Bar	7.4
12110712	Terminal 3F M/P 280 Bus Bar	7.4
12110713	Terminal 2F M/P 280 Bus Bar	7.4
12110714	Terminal 3F M/P 280 Bus Bar	7.4
12110715	Terminal 4F M/P 280 Bus Bar	7.4
12110716	Terminal 5F M/P 280 Bus Bar	7.4
12110717	Terminal 2F M/P 280 Bus Bar	7.4
12110718	Terminal 3F M/P 280 Bus Bar	7.4
12110719	Terminal 4F M/P 280 Bus Bar	7.4
12110720	Terminal 5F M/P 280 Bus Bar	7.4
12110751	Connector Assembly 7F M/P 280 FlexLock Sealed	2.35
12110753	Connector 7M M/P 280 Sealed	2.35
12110754	TPA M/P 280	2.35
12110782	TPA M/P 280	2.36
12110783	Clip Connector	9.13
12110822	Seal Connector 15F	2.36
12110842	Terminal F M/P 280 Tangless	2.24
12110843	Terminal F M/P 280 Tangless	2.24
12110844	Terminal F M/P 280 Tangless	2.24
12110845	Terminal F M/P 280 Tangless Sealed	2.30
12110846	Terminal F M/P 280 Tangless Sealed	2.30
12110847	Terminal F M/P 280 Tangless Sealed	2.30
12110853	Terminal F M/P 280 Tangless Sealed	2.30
12121897	Cavity Plug Insertion Tool	10.12
12122523	Terminal Removal Tool	10.8
12122584	Cavity Plug Insertion Tool	10.12
12122647	Secondary Lock & TPA Removal Tool	10.13
12122727	Cavity Plug Insertion Tool	10.12
12123162	Cavity Plug Insertion Tool	10.12
12124075	Terminal F M/P 150.2 Pull-To-Seat	2.12
12124076	Terminal F M/P 150.2 Pull-To-Seat	2.12
12124107	Connector 6M M/P 150	2.16
12124276	Terminal Battery Ring	9.4
12124295	Terminal Battery Ring	9.4
12124296	Terminal Battery Ring	9.4
12124297	Terminal Battery Ring	9.4
12124304	Terminal F M/P 480	2.42
12124471	Terminal Lamp Socket Wedge Base W2 Sealed	6.3
12124512	Terminal F 56 Series	9.10
12124513	Terminal F 56 Series	9.10
12124515	Terminal F 56 Series	9.10
12124517	Terminal F 56 Series	9.10
12124518	Terminal F 56 Series	9.10
12124519	Terminal F 56 Series	9.10
12124520	Terminal F 56 Series	9.10
12124522	Terminal F 56 Series	9.10
12124523	Terminal F 56 Series	9.10
12124559	Terminal F M/P 630	7.5
12124580	Terminal F W/P Sealed	6.16
12124581	Terminal F W/P Sealed	6.16
12124582	Terminal M W/P Sealed	6.17
12124587	Terminal M W/P Sealed	6.17
12124598	Terminal Lamp Socket Wedge Base W2 Sealed	6.3
12124634	Connector Assembly 5F M/P 280	2.38
12124669	Seal Cable 1W M/P 150	2.12
12124685	Connector Assembly 3F M/P 630	2.59
12124732	Stabilizer 116M M/P Mixed	2.86
12124811	TPA M/P 280	2.37
12124819	Connector Assembly 2F M/P 280 Sealed	2.32
12124824	TPA M/P 150	2.21
12124898	Connector Assembly 4F M/P 150, 280	2.77
12124977	Terminal M M/P 280 Sealed	2.31
12125080	Crimp Tool	10.7
12129008	Connector Header Assembly 32M MIC/P 100W	3.27
12129021	Retainer 32F MIC/P 100W	3.27
12129022	Retainer 32F MIC/P 100W	3.27
12129023	Retainer 32F MIC/P 100W	3.27
12129025	Connector 32F MIC/P 100W	3.27
12129026	Seal Connector 100W	3.27
12129030	Strain Relief 32W MIC/P 100W RH	3.27
12129051	TPA Lamp Socket C2	6.8
12129052	Terminal Lamp Socket Contact Sealed	6.3
12129053	Terminal Lamp Socket Ground Sealed	6.3
12129057	TPA Lamp Socket B1	6.8
12129061	Terminal F M/P 280 Tangless	2.24
12129081	Connector 2F M/P 280 FlexLock	2.26
12129082	Connector 2F M/P 280 FlexLock	2.26
12129083	TPA M/P 280	2.26
12129088	Connector 8F M/P 280 FlexLock	2.106
12129121	Electrical Center Base (4 Modules)	7.15
12129124	TPA 6F M/P 150,280	2.78
12129135	Connector 4M M/P 280	2.27
12129136	Connector 4F M/P 280 FlexLock	2.27
12129137	TPA M/P 280	2.27
12129138	TPA M/P 280	2.27
12129140	Connector Assembly 2F M/P 280.1 Pull-To-Seat	2.39
12129142	Connector Assembly 2F M/P 280.1 Pull-To-Seat	2.39
12129155	Connector 2M M/P 280	2.26
12129156	Connector 2M M/P 280	2.26
12129157	TPA M/P 280	2.26
12129183	Retainer 24F MIC/P 100W	3.26
12129213	Secondary Lock	2.96
12129214	Secondary Lock	2.96
12129221	Terminal Battery Ring	9.7
12129222	Terminal Battery Ring	9.5
12129225	Connector 24F MIC/P 100W	3.26
12129340	Connector Assembly 32M MIC/P 100	3.17
12129341	Connector Assembly 32M MIC/P 100	3.17
12129342	Connector Assembly 32M MIC/P 100	3.17
12129369	Connector Assembly 32M MIC/P 100	3.17
12129373	Terminal F M/P 150 Tangless	2.2
12129409	Terminal F M/P 280 Tangless Sealed	2.30
12129424	Terminal F M/P 280 Tangless	2.24
12129425	Terminal F M/P 280 Tangless	2.24
12129433	Terminal Battery Ring	9.5
12129435	Terminal Battery Ring	9.5
12129437	Terminal Battery Ring	9.5
12129465	Terminal Battery Ring	9.7
12129484	Terminal F M/P 150 Tangless	2.2
12129487	Connector Assembly 2F M/P 280	2.38
12129489	Connector 3F M/P 280 FlexLock	2.27
12129490	Connector 3M M/P 280	2.27
12129491	TPA M/P 280	2.27
12129492	TPA M/P 280	2.27
12129493	Terminal F M/P 280 Sealed	2.30
12129494	Terminal F M/P 280	2.24
12129497	Terminal M M/P 280 Sealed	2.31
12129498	Terminal M M/P 280	2.25
12129565	Connector Assembly 4F M/P 280 Sealed	2.34
12129596	Sensor Connector Assembly 2M M/P 150	8.4
12129598	Terminal Battery Ring	9.4
12129600	Connector 4M M/P 280 Sealed	2.34
12129613	Connector Assembly 7F M/P 280 FlexLock Sealed	2.35
12129614	Connector 7M M/P 280 Sealed	2.35
12129615	Connector 3M M/P 150	2.14
12129628	Terminal Battery Ring	9.5
12129651	Terminal Battery Ring	9.5
12129663	Terminal F M/P 280 Tangless	2.24
12129669	Secondary Lock	2.95
12129670	Secondary Lock	2.95
12129672	Connector Seal	2.95
12129691	Sensor Connector Assembly M M/P 150	8.14
12129715	Connector 6F M/P 280 FlexLock	7.26
12129716	Connector Assembly 4F M/P 280 FlexLock	7.30
12129822	Assembly Terminal Ring & Washer	9.2
12129833	Convenience Center	7.17
12129834	Secondary Lock	7.17
12129835	Secondary Lock	7.17
12129836	Secondary Lock	7.17
12129837	Secondary Lock	7.17
12129842	Connector 6F M/P 280,630	2.76

Peters de Laet
503-661-5088 – phone 503-661-5328 – fax
www.pdel.com

Part #	Description	Page
12129909	Seal Lamp Socket Wedge Base W3	6.4
12129938	Connector 2M M/P 630	2.54
12129939	Connector 2F M/P 630	2.54
12129940	TPA M/P 630	2.54
12131283	Connector 4F M/P 150	2.8
12131285	Connector 4M M/P 150	2.8
12131317	Connector 9F Mixed 280, 630	7.27
12131358	Secondary Lock	2.9
12131359	Secondary Lock	7.28
12131361	Secondary Lock	2.8
12131370	Secondary Lock	2.9
12131372	Secondary Lock	2.8
12131423	Terminal F Ducon 0.8	5.2
12131448	Terminal AF Central Electric Fuseblock	7.7
12131455	Terminal AF Central Electric Fuseblock	7.7
12131456	Terminal AF Central Electric Fuseblock	7.7
12131543	TPA M/P 480	2.48
12131592	Connector Assembly 3F M/P 480 Sealed	2.48
12143692	OBD II (3 Ft./915.0)	2.19
12143693	OBD II (8 Ft./2440.0)	2.19
12143694	OBD II (12 Ft./3660.0)	2.19
12146045	Connector Assembly 5F M/P 150	2.15
12146104	Cover Inline AutoFuse	7.30
12146281	Electrical Center	7.19
12146283	Secondary Lock	7.19
12146284	Secondary Lock	7.19
12146286	Cover Wire Dress	7.19
12146360	Terminal Battery Ring	9.4
12146361	Terminal Battery Ring	9.4
12146362	Terminal Battery Ring	9.4
12146363	Terminal Battery Ring	9.4
12146364	Terminal Battery Ring	9.4
12146365	Terminal Battery Ring	9.4
12146366	Terminal Battery Ring	9.4
12146398	Seal Lamp Socket	6.7
12146401	Terminal Battery Ring	9.5
12146418	Lamp Socket Wedge Base W2 Right Angle	6.7
12146425	Terminal Battery Ring	9.4
12146429	Terminal Battery Ring	9.4
12146447	Terminal F MIC/P 100	3.2
12146448	Terminal F MIC/P 100	3.2
12146464	Terminal Battery Ring	9.7
12146466	Terminal Battery Ring	9.7
12146467	Terminal Battery Ring	9.7
12146471	Terminal Battery Ring	9.5
12146487	Terminal Battery Ring	9.5
12146506	Terminal Battery Ring	9.5
12146564	Assembly Terminal 4F MAXI Bus Bar	7.6
12146579	Terminal Battery Ring	9.5
12146713	Terminal Battery Ring	9.4
12146718	Terminal Battery Ring	9.6
12146724	Connector 8M M/P 280	2.106
12146735	Connector 8M M/P 280	2.106
12146736	Terminal Battery Ring	9.5
12146744	Terminal Battery Ring	9.4
12146745	Terminal Battery Ring	9.4
12146805	Secondary Lock	7.18
12146815	Hybrid Module	7.13
12146816	Secondary Lock	7.13
12146817	Secondary Lock	7.13
12146830	Sensor Connector Assembly 2M M/P 150	8.4
12146835	Secondary Lock	7.11
12146836	Connector 30F M/P 280 FlexLock	7.11
12146840	Connector 7M M/P 280 Sealed	2.35
12146841	Connector Assembly 7F M/P 280 FlexLock Sealed	2.35
12146897	Connector Assembly 2M M/P 150 Sensor	8.11
12146933	Cover M/P 150	2.18
12146947	Secondary Lock	7.8
12146999	Terminal Battery Ring	9.5
12147054	Connector 5F M/P 150	2.8
12147055	Secondary Lock	2.8
12147060	TPA Ducon 6.3	5.18
12147066	Connector 30M Ducon 150, 280 Sealed	5.26
12147067	Connector Assembly 2F Ducon 6.3 Sealed	5.18
12147079	Connector 2F	7.28
12147098	Secondary Lock	5.15
12147099	Connector 5F Ducon 4.8	5.15
12147161	Connector 30F Ducon 150, 280	5.26
12147299	Terminal M Ducon 1.5	5.7
12147300	Terminal M Ducon 1.5	5.7
12147301	Terminal M Ducon 2.8	5.25
12147302	Terminal F Ducon 1.5	5.6
12147303	Terminal F Ducon 1.5	5.6
12147304	Terminal F Ducon 2.8	5.24
12147400	Terminal M Ducon 2.8	5.25
12147451	Terminal F Ducon 2.8	5.24
12147473	Terminal F Ducon 6.3 Sealed	5.16
12147474	Terminal F Ducon 6.3 Sealed	5.16
12147496	Connector Assembly 10F VF	6.25
12147497	Connector Assembly 15F VF	6.25
12147500	Secondary Lock	6.25
12147596	Terminal F Ducon 4.8	5.14
12147597	Terminal F Ducon 4.8	5.14
12147875	Harness Clip	9.15
12150547	Cavity Plug Removal Tool	10.12
12150860	Terminal Removal Tool	10.8
12151193	Terminal Removal Tool	10.9
12151194	Terminal Removal Tool	10.9
12151195	Terminal Removal Tool	10.9
12152019	Retainer Removal Tool	10.13
12152395	Terminal Removal Tool	10.9
12155975	Crimp Tool	10.7
12157735	Terminal F VF 280	6.22
12157736	Terminal F VF 280	6.22
12157739	Terminal F DS 280 Sealed	6.26
12157740	Terminal F DS 280 Sealed	6.26
12157764	Terminal VF 6.3 Central Electric Fuse Block	7.7
12158095	Connector 20F Ducon 1.5, 2.8, 4.8 Sealed	5.23
12158096	Secondary Lock	5.23
12158097	Terminal F Ducon 1.5 Sealed	5.20
12158098	Terminal F Ducon 2.8 Sealed	5.10
12158100	Connector 4F	7.28
12158101	Secondary Lock	7.28
12158104	Terminal M Ducon 1.5 Sealed	5.21
12158456	Connector Assembly 3F DS Sealed	6.27
12158457	Connector Assembly 5F DS Sealed	6.27
12160209	Cover Battery Connection	9.7
12160210	Cover Battery Connection	9.7
12160222	Terminal F M/P 150 Sealed	2.12
12160223	Terminal F M/P 150 Sealed	2.12
12160229	Terminal Battery Ring	9.5
12160231	Terminal Battery Ring	9.4
12160232	Terminal Battery Ring	9.5
12160233	Terminal Battery Ring	9.5
12160242	Terminal Battery Ring	9.5
12160244	Sensor Connector Assembly 2M M/P 150	8.5
12160245	Sensor Connector Assembly 2M M/P 150	8.5
12160246	Sensor Connector Assembly 2M M/P 150	8.6
12160277	Cover Shipping	7.16
12160281	Terminal Battery Ring	9.5
12160386	Assembly Lamp Socket B1 Base Right Angle	6.8
12160390	Assembly Lamp Socket C2 Base Right Angle	6.8
12160392	Assembly Lamp Socket C2 BSE	6.8
12160393	Lamp Socket Wedge Base W3 Right Angle	6.4
12160394	Lamp Socket Wedge Base W3 Right Angle	6.4
12160395	Lamp Socket Wedge Base W3 Right Angle	6.4
12160437	TPA OBD II	2.18
12160443	Terminal Battery Ring	9.5
12160446	Assembly Header Connector 10M M/P 150	2.103
12160504	Hybrid Module 36F M/P 280 FlexLock	7.12
12160541	Secondary Lock	7.12
12160635	Terminal 1F M/P 280 Bus Bar	7.4
12160636	Terminal 1F M/P 280 Bus Bar	7.4
12160637	Terminal 1F M/P 280 Bus Bar	7.4
12160638	Terminal 1F M/P 280 Bus Bar	7.4
12160640	Terminal 1F M/P 280 Bus Bar	7.4
12160641	Terminal 1F M/P 280 Bus Bar	7.4
12160642	Terminal 1F M/P 280 Bus Bar	7.4
12160643	Terminal 1F M/P 280 Bus Bar	7.4
12160644	Terminal 1F M/P 280 Bus Bar	7.4
12160645	Terminal 1F M/P 280 Bus Bar	7.4
12160646	Terminal 1F M/P 280 Bus Bar	7.4
12160648	Terminal 2F M/P 280 Bus Bar	7.4
12160649	Terminal 2F M/P 280 Bus Bar	7.4
12160650	Terminal 2F M/P 280 Bus Bar	7.4
12160652	Terminal 3F M/P 280 Bus Bar	7.4
12160653	Terminal 3F M/P 280 Bus Bar	7.4
12160654	Terminal 3F M/P 280 Bus Bar	7.4
12160655	Terminal 3F M/P 280 Bus Bar	7.4
12160657	Terminal 4F M/P 280 Bus Bar	7.4
12160658	Terminal 4F M/P 280 Bus Bar	7.4
12160660	Terminal 5F M/P 280 Bus Bar	7.4
12160661	Terminal 5F M/P 280 Bus Bar	7.4
12160662	Terminal 6F M/P 280 Bus Bar	7.4
12160663	Terminal 1F M/P 280 Bus Bar	7.4
12160664	Terminal 3F M/P 280 Bus Bar	7.4
12160665	Terminal 1F M/P 280 Bus Bar	7.4
12160666	Terminal 2F M/P 280 Bus Bar	7.4
12160667	Terminal 1F M/P 280 Bus Bar	7.4
12160674	Shunt 3M M/P 280 MAXI/MINI	7.13
12160677	Secondary Lock	7.18
12160678	Secondary Lock	7.18
12160679	Secondary Lock	7.18
12160759	Bolt Stud Hex Head	7.19
12160765	Cover Electrical Center	7.19
12160777	Assembly Header Connector 56M MIC/P 100	3.21
12160778	Connector 24F MIC/P 100	3.21
12160779	Connector 32F MIC/P 100	3.21
12160809	Shroud	2.95
12160829	MAXI Fuse Assembly Module	7.9
12160855	Assembly Sensor Temperature Transmission	8.13
12160861	Assembly Header Connector 64M MIC/P 100W	3.22
12160893	Connector 1F M/P 800 MAXI Fuse	2.64
12160894	Connector 1M M/P 800 FlexLock MAXI	2.64

Peters de Laet
503-661-5088 – phone 503-661-5328 – fax
www.pdel.com

Part #	Description	Page
12160895	TPA M/P 800	2.64
12160897	Cover Convenience Center	7.10
12160906	Cover Convenience Center	7.17
12160947	Sensor Temp Discharge Air	8.8
12160959	Connector 30M M/P 280, 480 Sealed	2.93
12161119	Terminal Battery Ring	9.5
12161133	Terminal Battery Ring	9.5
12161170	Terminal Battery Ring	9.5
12161184	Terminal F M/P 150.2 Pull-To-Seat	2.12
12161185	CPA Slide Lock Assist	2.36
12161186	Connector 15F M/P 280 FlexLock Sealed	2.36
12161187	Connector 15M M/P 280 Sealed	2.36
12161191	Assembly Shroud & Gasket	2.95
12162000	Connector 2M M/P 150 Sealed	2.14
12162017	Connector Assembly 2F M/P 150	2.21
12162068	M/P 480 Cable Seal	2.46
12162098	Terminal Ring	9.3
12162099	Terminal Ring	9.3
12162100	Terminal Ring	9.3
12162102	Connector 4M M/P 150 Sealed	2.15
12162144	Connector Assembly 4F M/P 150 Sealed	2.15
12162182	Connector Assembly 3F M/P 150.2 Pull-To-Seat	2.22
12162185	Connector Assembly 3F M/P 150.2 Pull-To-Seat	1.11
12162188	Connector Assembly 4F M/P 150.2 Pull-To-Seat	2.22
12162189	Connector Assembly 4F M/P 150.2 Pull-To-Seat	1.11
12162190	Connector Assembly 4F M/P 150.2 Pull-To-Seat	1.11
12162191	Connector Assembly 4F M/P 150.2 Pull-To-Seat	2.22
12162193	Connector Assembly 2F M/P 150.2 Pull-To-Seat	2.22
12162194	Connector Assembly 2F M/P 150.2 Pull-To-Seat	1.11
12162195	Connector Assembly 2F M/P 150.2 Pull-To-Seat	1.11
12162197	Connector Assembly 2F M/P 150.2 Pull-To-Seat	2.22
12162198	Connector Assembly 2F M/P 150.2 Pull-To-Seat	2.22
12162199	Connector Assembly 2F M/P 150.2 Pull-To-Seat	2.22
12162210	Connector Assembly 6F M/P 150.2 Pull-To-Seat	2.22
12162215	Connector Assembly 2F M/P 150.2 Pull-To-Seat	2.22
12162216	Connector Assembly 2F M/P 150.2 Pull-To-Seat	2.22
12162217	Connector Assembly 2F M/P 150.2 Pull-To-Seat	2.22
12162218	Connector Assembly 2F M/P 150.2 Pull-To-Seat	2.22
12162222	Lamp Socket Wedge Base W2	6.6
12162223	Lamp Socket Wedge Base W2	6.6
12162229	Connector 6F M/P 280, 630	2.76
12162260	Connector Assembly 6F M/P 150.2 Pull-To-Seat	2.22
12162261	Connector Assembly 6F M/P 150.2 Pull-To-Seat	2.22
12162279	Connector Assembly 3F M/P 150.2 Pull-To-Seat	1.11
12162280	Connector Assembly 3F M/P 150.2 Pull-To-Seat	2.22
12162299	TPA M/P 630	2.76
12162300	TPA M/P 280	2.76
12162301	TPA M/P 630	2.76
12162343	Connector 2M M/P 150 Sealed	2.14
12162365	Cover Electrical Center	7.19
12162412	Stabilizer 25M M/P	2.84
12162413	Stabilizer 17M M/P	2.84
12162512	Connector 3F M/P 480	2.49
12162527	Shroud Sliding	2.96
12162573	Stabilizer 78M M/P	2.96
12162595	Terminal F M/P 280	2.24
12162596	Terminal F M/P 280	2.24
12162597	Terminal F M/P 280	2.24
12162932	Assembly Terminal Ring & Washer	9.2
12162998	Assembly Connector 9F M/P 280, 630	7.27
12176387	Terminal F M/P 280 Sealed	2.30
12176388	Terminal F M/P 280 Sealed	2.30
12176389	Terminal F M/P 280 Sealed	2.30
12176445	GT 280 Female Connector Assembly Unsealed	1.14
12176446	GT 280 Female Connector Assembly Unsealed	1.14
12176460	Connector 12F GT 150 Splice Saver	6.11
12176462	TPA 12F GT 150	6.11
12176469	Assembly CAP 2-6M GT 150 Splice Saver	6.11
12176473	Connector 4-3F M/P 280 Splice Saver	6.11
12176475	TPA 12F M/P 280	6.11
12176478	Assembly CAP 4-3M M/P 280 Splice Saver	6.11
12176513	TPA 12W M/P 280	6.12
12176593	Terminal Battery Ring	9.5
12176640	Spacer Lock	2.36
12176836	GT 280 Female Connector Assembly Unsealed	1.14
12176852	Terminal Lamp Socket Wedge Base	6.3
12176853	Terminal Lamp Socket Wedge Base	6.3
12176865	TPA M/P 280	2.36
12177082	TPA M/P 150	2.17
12177145	Base Fuseblock MINI 56F	7.8
12177161	Lamp Socket Insert w/Terminals	6.4
12177163	Lamp Socket Insert w/Terminals	6.4
12177296	Terminal Battery Positive	9.6
12177297	Terminal Battery Negative	9.6
12177298	Terminal Battery Positive	9.6
12177299	Terminal Battery Negative	9.6
12180082	Retainer Removal Tool	10.13
12184934	Connector 15M Ducon 1.5	5.9
12184935	Secondary Lock	5.9
12184963	Connector 12M Ducon 1.5	5.8
12185000	TPA Ducon 2.8	5.12
12185004	Connector 11F Ducon 2.8, 4.8 Sealed	5.22
12185005	Secondary Lock	5.22
12185008	Terminal F Ducon 2.8 Sealed	5.10
12185009	Terminal F Ducon 4.8 Sealed	5.20
12185026	Connector 2F Ducon 2.8 Sealed	5.13
12185027	TPA Ducon 2.8	5.13
12185079	Ring Ducon	5.27
12185080	Secondary Lock	5.9
12185081	Connector 15F Ducon 1.5	5.9
12185082	Connector Ring Ducon	5.27
12185083	Two Position Carrier	9.16
12185085	Connector 9M Ducon 1.5	5.8
12185088	Connector 30F Ducon 1.5, 2.8	5.27
12185126	Connector 6M Ducon 2.8 Sealed	5.12
12185129	Terminal M Ducon 2.8 Sealed	5.11
12185227	Terminal F Ducon 4.8	5.14
12185235	Terminal M Ducon 4.8 Sealed	5.21
12185236	Terminal M Ducon 4.8 Sealed	5.21
12185237	Terminal M Ducon 2.8 Sealed	5.11
12185243	Secondary Lock	6.25
12185268	Terminal VF 6.3 Central Electric Fuse Block	7.7
12185269	Terminal VF 6.3 Central Electric Fuse Block	7.7
12185277	Holder Ducon	5.22
12185278	Connector 11M Ducon 2.8, 4.8 Sealed	5.22
12185279	Cover M/P 150	2.18
12185280	Connector 16F M/P 150	2.18
12185284	Connector 12F Ducon 1.5	5.8
12185521	Connector 10F VF	6.25
12185550	Terminal F Ducon 4.8 Sealed	5.20
12185636	Connector 5M M/P 150	2.8
12185643	Fuse Extractor	7.20
12186041	Assembly Header Connector 32M MIC/P 100W	3.27
12186043	Assembly Header Connector 32M MIC/P 100W	3.27
12186320	Terminal Lamp Socket Wedge Base Sealed	6.3
12186347	Connector Assembly 6F M/P 150, 280 Sealed	2.78
12186353	Clip Connector	9.13
12186400	Connector 5M M/P 280 Sealed	2.34
12186869	Stabilizer 56M	2.85
12191005	Terminal Battery Ring	9.6
12191050	Assembly Header Connector 40M MIC/P 100	3.19
12191057	Terminal Ring	9.2
12191140	Assembly Header Connector 48M MIC/P 100	3.20
12191152	GT 150 Cable Seal	1.6
12191153	GT 150 Cable Seal	1.6
12191154	GT 280 Cable Seal	1.38
12191155	GT 150 Cable Seal	1.10
12191156	GT 280 Cable Seal	1.38
12191157	Assembly Seal Cable 1W GT	1.38
12191216	Connector 12F GT 150 Splice Saver	6.11
12191217	Assembly CAP 12M GT 150 Splice Saver	6.11
12191220	Terminal Battery Ring	9.4
12191221	GT 280 Cable Seals	1.18
12191222	GT 280 Cable Seals	1.18
12191223	GT 280 Cable Seals	1.18
12191231	Seal Cable	9.8
12191235	Seal Cable 1W GT	1.18
12191243	Lamp Socket Wedge Base W3	6.5
12191293	Assembly Header Connector 64M MIC/P 100	3.22
12191375	Connector 16F MIC/P 100	3.22
12191461	Terminal Battery Ring	9.6
12191487	Connector Assembly 38M M/P 280, 630	2.95
12191497	Electrical Center Base (1 Module)	7.14
12191522	TPA Lamp Socket	6.7
12191544	Module MINI Fuse 40F	7.8
12191773	Terminal Battery Ring	9.6
12191787	Terminal Battery Ring	9.6
12191811	Terminal F GT 150	1.2
12191812	Terminal F GT 150	1.2
12191818	Terminal F GT 150 Sealed	1.6
12191819	Terminal F GT 150 Sealed	1.6
12191847	Hybrid Assembly Module	7.13
12191848	Assembly Fuseblock F MINI, MAXI	7.13
12191849	Secondary Lock	7.13

Peters de Laet
503-661-5088 – phone 503-661-5328 – fax
www.pdel.com

Part #	Description	Page
12191900	Connector 12F GT 150 Splice Saver Sealed	6.14
12191901	TPA 12F GT 150 Splice Saver	6.14
12191904	Assembly CAP 12M GT 150 Splice Saver	6.14
12191905	Connector 3-4F GT 150 Splice Saver Sealed	6.14
12191908	Assembly CAP 3-4M GT 150 Splice Saver	6.14
12191910	Connector 6F GT 150 Splice Saver Sealed	6.14
12191911	TPA 6F GT 150 Splice Saver	6.14
12191914	Assembly Cap 6M GT 150 Splice Saver	6.14
12196895	Connector Assembly 2F DS Sealed	6.27
12197134	Cover Ducon	5.22
12197559	Terminal F VF 280	6.22
12198103	Terminal F DS 280 Sealed	6.26
12198151	Terminal F VF 280	6.22
12198198	Plug Cavity	9.8
12198409	Connector Assembly 9F VF	6.23
12198533	Secondary Lock	5.8
13510085	Connector Assembly 2F GT 150 Sealed	1.8
13510099	Connector Assembly 2M GT 150 Sealed	1.8
13511131	GT 150 Female Connector Assembly Sealed	1.6
13511134	GT 150 Female Connector Assembly Sealed	1.6
13512092	GT 150 Female Connector Assembly Sealed	1.6
13513467	MicroHVT 1R 4F	4.50
13513468	MicroHVT 1R 8F w/CPA	4.54
13513469	MicroHVT Female w/CPA	4.50
13513470	MicroHVT 1R 8F w/CPA	4.54
13513473	MicroHVT 4F Secondary Lock	4.50
13513474	MicroHVT 6F Secondary Lock	4.52
13513475	MicroHVT 8F Secondary Lock	4.54
13516905	Connector Assembly 16F GT 150	1.5
13516907	Connector Assembly 16M GT 150	1.5
13517352	GT 280 Female Connector Assembly Sealed	1.18
13518845	Connector Assembly 2F GT 280 Sealed	1.20
13518847	Connector Assembly 2M GT 280 Sealed	1.20
13519047	Connector Assembly 3F GT 150 Sealed	1.8
13519049	Connector Assembly 3M GT 150 Sealed	1.8
13519051	Connector Assembly 5F GT 150 Sealed	1.8
13519053	Connector Assembly 5M GT 150 Sealed	1.8
13520382	GT 150 Female Connector Assembly Unsealed USCAR	1.2
13521455	Connector Assembly 3F GT 280 Sealed	1.20
13521457	Connector Assembly 3M GT 280 Sealed	1.20
13521459	Connector Assembly 4F GT 280 Sealed	1.20
13521461	Connector Assembly 4M GT 280 Sealed	1.20
13521463	Connector Assembly 5F GT 280 Sealed	1.20
13521465	Connector Assembly 5M GT 280 Sealed	1.20
13521467	Connector Assembly 6F GT 280 Sealed	1.20
13521469	Connector Assembly 6M GT 280 Sealed	1.20
13521472	Connector Assembly 8F GT 150	1.5
13521474	Connector Assembly 8M GT 150	1.5
13521476	Connector Assembly 14F GT 150	1.5
13521478	Connector Assembly 14M GT 150	1.5
13523064	Connector Assembly 12F GT 280	1.17
13526678	GT 150 Female Terminal Unsealed	1.2
13526680	GT 150 Female Terminal Unsealed	1.2
13530777	Connector Assembly 12F GT 150 Sealed	1.9
13531954	MicroHVT 1R 4F	4.50
13531958	MicroHVT 1R 4F w/CPA	4.50
13542790	GT 150 Female Connector Assembly	1.6
13577943	Passthrough Shroud	2.93
13583664	GT 150 Female Connector Assembly Unsealed USCAR	1.2
13586106	GT 150 Female Connector Assembly Unsealed USCAR	1.2
13586110	GT 150 Female Connector Assembly Unsealed USCAR	1.2
13586114	GT 150 Female Connector Assembly Unsealed USCAR	1.2
13586118	GT 150 Female Connector Assembly Unsealed USCAR	1.2
13586122	GT 150 Female Connector Assembly Unsealed USCAR	1.2
13586126	GT 150 Female Connector Assembly Unsealed USCAR	1.2
13586130	GT 150 Female Connector Assembly Unsealed USCAR	1.2
13586134	GT 150 Female Connector Assembly Unsealed USCAR	1.2
13586138	GT 150 Female Connector Assembly Unsealed USCAR	1.2
15300002	Connector 2M M/P 280 Sealed	2.33
15300003	Connector 3M M/P 280	2.33
15300014	TPA M/P 280	2.33
15300015	TPA M/P 280	2.33
15300016	TPA M/P 280	2.34
15300027	Connector Assembly 2F M/P 280 Sealed	2.33
15304621	Terminal Lamp Socket Ground Sealed	6.3
15304622	Terminal Lamp Socket Contact Sealed	6.3
15304690	Connector 18F	1.34
15304692	Connector 18F GT 150, 280	1.34
15304694	TPA F GT 150, 280	1.34
15304695	TPA M GT 150, 280	1.34
15304701	Terminal M GT 150	1.3
15304702	Terminal M GT 150	1.3
15304710	Terminal F GT 280	1.14
15304711	Terminal F GT 280	1.14
15304712	Terminal F GT 280	1.14
15304713	Terminal F GT 280	1.14
15304715	Terminal F GT 280 Sealed	1.38
15304716	Terminal F GT 280 Sealed	1.38
15304717	Terminal F GT 280 Sealed	1.38
15304718	Terminal F GT 280 Sealed	1.18
15304719	Terminal F GT 280 Sealed	1.18
15304720	Terminal F GT 280 Sealed	1.18
15304722	Terminal M GT 280	1.15
15304723	Terminal M GT 280	1.15
15304724	Terminal M GT 280	1.15
15304725	Terminal M GT 280	1.15
15304727	Terminal M GT 280 Sealed	1.39
15304728	Terminal M GT 280 Sealed	1.39
15304729	Terminal M GT 280 Sealed	1.39
15304730	Terminal M GT 280 Sealed	1.39
15304731	Terminal M GT 280 Sealed	1.39
15304732	Terminal M GT 280 Sealed	1.39
15304841	TPA 40M GT 150, 280	1.37
15304842	TPA 40F GT 150, 280	1.37
15304850	Terminal Battery Ring	9.5
15304876	Cover Battery Connection	9.7
15304878	Cover Battery Connection	9.7
15304903	TPA 20M GT 150, 280	1.41
15304904	TPA 20F GT 150, 280	1.41
15304905	Seal Connector	1.41
15304908	Connector 30F GT 150, 280	1.36
15304912	TPA 30M GT 150, 280	1.36
15304913	TPA 30F GT 150, 280	1.36
15305118	Terminal Battery Positive	9.6
15305119	Terminal Battery Negative	9.6
15305152	Cover Electrical Center	7.13
15305169	Plug Cavity GT	1.10
15305170	Plug Cavity GT	1.19
15305171	Plug Cavity GT	1.7
15305288	Connector 2-6F M/P 280 Splice Saver	6.12
15305289	Assembly CAP 2-6M M/P 280 Splice Saver	6.12
15305291	Connector 12F M/P 280 Splice Saver	6.12
15305292	Assembly CAP 12M M/P 280 Splice Saver	6.12
15305294	Connector 12F M/P 280 Splice Saver	6.12
15305295	Assembly CAP 12M M/P 280 Splice Saver	6.12
15305297	Connector 12F M/P 280 Splice Saver	6.12
15305298	Assembly Cap 12M M/P 280 Splice Saver	6.12
15305351	Seal Cable 1W GT	1.10
15305473	TPA Lamp Socket Wedge Base W3	6.5
15305504	Terminal Battery Ring	9.5
15305508	Terminal Battery Ring	9.6
15313892	Stabilizer Removal Tool	10.13
15317321	Lever Lock GT	1.35
15317322	Connector 22M GT 150, 280	1.35
15317323	TPA 22W GT 150, 280	1.35
15317325	Connector 22F GT 150, 280	1.35
15317326	TPA 22W GT 150, 280	1.35
15317352	Stabilizer 38M	2.95
15317380	Connector 38M GT 150, 280 Sealed	1.41
15317550	Lever Lock GT	1.34
15317575	Connector 16F M/P 150 Tangless	2.18
15317651	Lamp Socket Wedge Base W2	6.7
15317652	O-Ring	6.7
15317694	Connector 40M GT 150, 280	1.44
15317735	Connector 30M GT 150, 280	1.43
15317798	Terminal Battery Ring	9.5
15317814	Terminal M GT 150 Flex Circuit	1.42
15317815	Terminal M GT 280 Flex Circuit	1.42
15317828	TPA 30W GT 150, 280 Flex Circuit	1.43
15317832	CPA GT	1.4
15318209	Terminal Battery Ring	9.6
15324032	Cover Convenience Center	7.8
15324063	TPA M/P 280	2.34
15324070	TPA M/P 150	2.4
15324332	TPA M/P 280	2.106

Peters de Laet
503-661-5088 – phone 503-661-5328 – fax
www.pdel.com

Part #	Description	Page
15324428	Assembly Insert Wedge Base W2	6.7
15324456	TPA M/P 280	2.37
15324525	TPA M/P 150	2.16
15324722	TPA Lamp Socket	6.6
15324764	Secondary Lock M/P 280, 480, 630	2.85
15324857	TPA M/P 280	2.34
15324946	Assembly Lamp Socket Wedge Base W2	6.7
15324973	Assembly Seal Cable M/P 150	2.12
15324974	Assembly Seal Cable M/P 150	2.12
15324975	Assembly Seal Cable M/P 150	2.12
15324976	Assembly Seal Cable M/P 150	2.12
15324980	Assembly Seal Cable M/P & W/P	2.30
15324981	Assembly Seal Cable M/P & W/P	2.30
15324982	Assembly Seal Cable M/P&W/P	2.30
15324983	Assembly Seal Cable M/P & W/P	2.30
15324984	Assembly Seal Cable M/P & W/P	2.30
15324985	Assembly Seal Cable 1W M/P & W/P	2.30
15324987	Assembly Seal Cable M/P 480	2.46
15324988	Assembly Seal Cable M/P 480	2.46
15324989	Assembly Seal Cable M/P 480	2.46
15324990	Assembly Seal Cable M/P 480	2.46
15324991	Assembly Seal Cable M/P 480	2.46
15324992	Assembly Seal Cable M/P 480	2.46
15324993	Assembly Seal Cable M/P 630	2.56
15324994	Assembly Seal Cable M/P 630	2.56
15324995	Assembly Seal Cable M/P 630	2.56
15324996	Assembly Seal Cable 1W M/P 630	2.56
15324997	Assembly Seal Cable M/P 630	2.56
15326004	Terminal F GT 280 Sealed	1.18
15326063	Connector 22F GT 150, 280	1.35
15326064	Connector 22M GT 150, 280	1.35
15326082	Connector Assembly 18F Mixed GT 150/280	1.26
15326084	Connector Assembly 16F GT 150, 280 Sealed	1.30
15326085	Connector Assembly 16M GT 150, 280 Sealed	1.30
15326177	Stabilizer 40M GT	1.44
15326266	Terminal F GT 150 Sealed	1.10
15326267	Terminal F GT 150 Sealed	1.10
15326268	Terminal M GT 150 Sealed	1.7
15326269	Terminal M GT 150 Sealed	1.7
15326290	Lamp Socket Wedge Base Right Angle	6.4
15326291	Lamp Socket Wedge Base Right Angle	6.4
15326386	Sensor Connector Assembly 2M M/P 150	8.10
15326389	Connector Assembly 5F GT 150	1.12
15326416	GT Mating Connector	1.43
15326556	Connector Assembly 3F GT 150 Sealed	1.13
15326559	Connector Assembly 4F GT 150	1.12
15326654	Connector Assembly 8F GT 280 Sealed	1.21
15326655	Connector Assembly 8M GT 280 Sealed	1.21
15326660	Connector Assembly 10F GT 280 Sealed	1.21
15326661	Connector Assembly 10M GT 280 Sealed	1.21
15326666	Connector Assembly 16F GT 280 Sealed	1.21
15326667	Connector Assembly 16M GT 280 Sealed	1.21
15326678	Connector Assembly 2M GT 280 Sealed	1.20
15326762	Connector 30M GT 150	1.36
15326799	Lever Lock GT	1.36
15326835	Connector Assembly 8F GT 150 Sealed	1.9
15326840	Connector Assembly 8M GT 150 Sealed	1.9
15326842	Connector Assembly 10F GT 150 Sealed	1.9
15326847	Connector Assembly 10M GT 150 Sealed	1.9
15326854	Connector Assembly 12M GT 150 Sealed	1.9
15326856	Connector Assembly 14F GT 150 Sealed	1.9
15326861	Connector Assembly 14M GT 150 Sealed	1.9
15326863	Connector Assembly 16F GT 150 Sealed	1.9
15326868	Connector Assembly 16M GT 150 Sealed	1.9
15326870	Connector Assembly 2F GT 280	1.16
15326874	Connector Assembly 2M GT 280	1.16
15326877	Connector Assembly 3F GT 280	1.16
15326881	Connector Assembly 3M GT 280	1.16
15326886	Connector Assembly 4F GT 280	1.16
15326890	Connector Assembly 4M GT 280	1.16
15326893	Connector Assembly 5F GT 280	1.16
15326897	Connector Assembly 5M GT 280	1.16
15326900	Connector Assembly 6F GT 280	1.16
15326904	Connector Assembly 6M GT 280	1.16
15326910	Connector Assembly 12F GT 280 Sealed	1.21
15326915	Connector 12M GT 280 Sealed	1.21
15326917	Connector Assembly 14F GT 280 Sealed	1.21
15326922	Connector 14M GT 280 Sealed	1.21
15326931	Connector Assembly 10F GT 280	1.17
15326935	Connector Assembly 10M GT 280	1.17
15326939	Connector Assembly 12 F Mixed 150/280 Sealed	1.30
15326942	Connector Assembly 12M GT 280	1.17
15326945	Connector Assembly 14F GT 280	1.17
15326949	Connector Assembly 14M GT 280	1.17
15326952	Connector Assembly 16F GT 280	1.17
15326956	Connector Assembly 16M GT 280	1.17
15327126	Seal Cable	9.9
15327153	Cover Ducon	5.28
15327154	Connector Module 1, 16M Ducon Sealed	5.28
15327155	Connector Module 2, 16M Ducon Sealed	5.28
15327159	Terminal M Ducon 0.8	5.3
15327160	Connector 40F Ducon Sealed	5.28
15327164	Connector Ring Ducon	5.28
15327190	Connector 8F Ducon 0.8	5.5
15327192	Terminal F DS 280 Sealed	6.26
15327221	Connector Assembly 12F VF	6.23
15327398	Terminal F VF 630	6.22
15327399	Terminal F VF 630	6.22
15327400	Terminal F VF 630	6.22
15327416	Connector 26F VF	6.24
15327622	Assembly Module 8F	7.24
15327625	Connector 1F	7.25
15327626	Connector 1F	7.24
15327627	Connector 2F	7.25
15327628	Connector 3F	7.25
15327645	Connector 16F OBDII	7.22
15327646	TPA	7.22
15327654	Connector Module 1, 16F Ducon Sealed	5.28
15327655	Connector Module 2, 16F Ducon Sealed	5.28
15327694	Module Cover	7.25
15327747	Conduit TPA M/P 280	2.33
15327799	Conduit TPA M/P 150	2.14
15327859	Seal Cable	9.8
15327863	Seal Cable	9.8
15327864	Seal Cable	9.9
15327913	Seal Cable	9.8
15327918	Seal Cable	9.8
15327998	Seal Cable	9.9
15332129	Connector Assembly 2F GT 150	1.4
15332130	Connector Assembly 2M GT 150	1.4
15332132	Connector Assembly 3F GT 150	1.4
15332133	Connector Assembly 3M GT 150	1.4
15332135	Connector Assembly 4F GT 150	1.4
15332136	Connector Assembly 4M GT 150	1.4
15332138	Connector Assembly 5F GT 150	1.4
15332139	Connector Assembly 5M GT 150	1.4
15332141	Connector Assembly 6F GT 150	1.4
15332142	Connector Assembly 6M GT 150	1.4
15335987	Connector Assembly 2F GT 150 Sealed	1.13
15336001	Connector Assembly 4F GT 150	1.13
15336004	Connector Assembly 2F GT 150 Sealed	1.12
15336013	Connector Assembly 6F GT 150 Sealed	1.12
15336027	Connector Assembly 2F GT 150 Sealed	1.11
15336034	Connector Assembly 12M Mixed GT 150, 280 Sealed	1.30
15336037	Connector Assembly 14F GT Mixed 150, 280 Sealed	1.30
15336116	Connector Assembly 2F 280 GT Sealed	1.22
15336117	Connector Assembly 2F 280 GT Sealed	1.22
15336121	Connector Assembly 3F GT 150 Sealed	1.12
15336173	Connector 24M GT 150, 280 Sealed	1.40
15336177	Seal Connector	1.40
15336205	Connector Assembly 12F GT Mixed 150, 280	1.26
15336209	Connector Assembly 12M GT Mixed 150, 280	1.26
15336219	Connector Assembly 16F GT Mixed 150, 280	1.26
15336224	Connector Assembly 16M GT Mixed 150, 280	1.26
15336267	Lever Lock GT	1.41
15336387	Lever Lock GT	1.37
15336467	Connector 18M GT 150, 280	1.34
15336468	Connector 18M GT 150, 280	1.34
15336674	Seal Cable 1W GT 280	1.18
15336766	Connector 9F Ducon 1.5	5.8
15337197	Plug Cavity Ducon 2.8	5.11
15337204	Seal Cable	9.9
15337249	Secondary Lock	7.28
15338470	Seal Cable	9.9
15339412	Seal Cable	9.8
15339818	Connector 4F	7.28
15339838	Seal Cable	9.8
15339967	Seal Cable	9.8
15343826	Seal Cable	9.8
15343827	Seal Cable	9.8
15344032	Seal Cable	5.16
15344037	Connector 20F Ducon 0.8	5.4

Peters de Laet
503-661-5088 – phone 503-661-5328 – fax
www.pdel.com

Part #	Description	Page
15344038	Connector 20M Ducon 0.8	5.4
15344040	Connector 2F Ducon 2.8 Sealed	5.13
15344042	Connector 2F Ducon 2.8 Sealed	5.13
15344052	Connector Assembly 6F Ducon 2.8 Sealed	5.12
15344054	Connector 2M Ducon 6.3 Sealed	5.18
15344060	Connector 6M Ducon 2.8, 4.8 Sealed	5.22
15344061	Connector 6F Ducon 2.8, 4.8 Sealed	5.22
15344069	Connector 15F Ducon 2.8, 4.8 Sealed	5.22
15344072	Connector 6F Ducon 4.8	5.15
15344102	Seal Cable	9.9
15344104	Seal Cable	9.9
15344324	Seal Cable	5.24
15344628	Connector 3M M/P 480 Sealed	2.48
15344630	Connector 5F VF	6.25
15344631	Terminal M Ducon 6.3 Sealed	5.17
15344632	Terminal M Ducon 6.3 Sealed	5.17
15344643	Seal Cable	9.8
15344644	Seal Cable	9.9
15344645	Seal Cable	9.9
15344646	Seal Cable	9.9
15344647	Seal Cable	9.9
15344665	Electrical Center	7.23
15344666	Seal Cable	9.8
15344856	Harness Clip	9.15
15354635	Assembly Cap 12M M/P 280 Splice Saver	6.12
15354674	Secondary Lock	5.8
15354753	Terminal Ring	9.2
15354754	Terminal Ring	9.2
15354755	Terminal Ring	9.2
15354756	Terminal Ring	9.2
15354757	Terminal Ring	9.2
15354758	Terminal Ring	9.2
15354859	Lamp Socket Wedge Base Right Angle W3 Sealed	6.2
15354864	Lamp Socket Wedge Base W3 Right Angle	6.2
15354865	Lamp Socket Wedge Base W3 Right Angle	6.2
15355268	Connector Assembly 5F GT 150	1.11
15355317	Connector Assembly 2F GT 150 Sealed	1.11
15355319	Connector Assembly 2F GT 150 Sealed	1.11
15355323	Connector Assembly 3F GT 150 Sealed	1.11
15355325	Connector Assembly 3F GT 150 Sealed	1.11
15355329	Connector Assembly 4F GT 150	1.11
15355331	Connector Assembly 4F GT 150	1.11
15355370	GT 150 Female Connector Assembly Sealed USCAR	1.6
15355380	TPA 20M GT 150, 280 Flex Circuit	1.44
15355521	Terminal Ring	9.2
15357040	Connector 8F M/P 280 Flexlock	2.106
15357042	Assembly Header Connector 32M M/P 280, MIC/P 100	3.23
15357044	Connector Assembly 32M MIC/P Mixed Sealed	3.23
15357046	Connector Assembly 32M MIC/P Mixed Sealed	3.23
15358661	Base Fuseblock MINI 65F	7.18
15358681	Connector 3M M/P 630	2.59
15359196	Micro64 16F Secondary Lock	4.62
15359287	Connector 40F GT 150, 280	1.37
15363604	Seal Cable	9.9
15363605	Seal Cable	9.9
15363779	Seal Cable	9.9
15363846	Connector 25F VF	6.24
15363852	Connector Assembly 16F VF	6.23
15363980	Seal Cable	9.9
15363991	Seal Cable, Ducon	9.9
15363992	Seal Cable, Ducon	5.10
15364309	Connector Assembly 2F DS Sealed	6.27
15364318	Connector Assembly 3F DS Sealed	6.27
15366021	Seal Cable 1W GT	1.6
15366022	Seal Cable 1W GT	1.10
15366060	Seal Cable 1W GT	1.6
15366061	Seal Cable 1W GT 280	1.38
15366063	Seal Cable 1W GT 280	1.38
15366064	Seal Cable 1W GT 280	1.38
15366065	Seal Cable 1W GT 280	1.18
15366066	Seal Cable 1W GT 280	1.18
15366067	Seal Cable 1W GT 280	1.18
15366099	Connector 24F GT 150, 280 Sealed	1.40
15369322	Lever Lock GT	1.40
15373421	PLR 24M GT 150, 280	1.40
15373422	PLR	1.40
15393744	Connector 40F GT 150, 280	1.37
15394147	Micro64 Female Terminal	4.63
15394149	Micro64 2R 16F w/CPA	4.62
15394150	Micro64 2R 16F w/CPA	4.62
15394151	Micro64 2R 16F w/CPA	4.62
15394152	Micro64 2R 16F w/CPA	4.62
15394153	Micro64 2R 16F w/CPA	4.62
15394154	Micro64 2R 16F w/CPA	4.62
15396848	Connector 6F M/P 150	2.9
15396849	Connector 6M M/P 150	2.9
15397577	Connector Assembly 6F GT 150 Sealed	1.8
15397579	Connector Assembly 6M GT 150 Sealed	1.8
15401440	Micro64 Female Terminal	4.63
15402131	Secondary Lock M/P 150, 280	2.86
15404970	Micro64 8F Secondary Lock	4.60
15406141	Micro64 2R 8F w/CPA	4.60
15406142	Micro64 2R 8F w/CPA	4.60
15410728	Connector Assembly 4F GT 150 Sealed	1.11
15416970	Micro64 2R 16F	4.62
15418982	Stabilizer 18M GT 150, 280	1.34
15418983	Stabilizer 22M GT 150, 280	1.35
15418984	Stabilizer 30M GT 150, 280	1.36
15420150	064 Header 2R SM 8W	4.24
15420151	064 Header 2R SM 8W	4.24
15420152	064 Header 2R SM 8W	4.24
15420153	064 Header 2R SM 8W	4.24
15420154	064 Header 2R SM 8W	4.24
15420155	064 Header 2R SM 8W	4.24
15420156	064 Header 2R SM 10W	4.26
15420157	064 Header 2R SM 10W	4.26
15420158	064 Header 2R SM 10W	4.26
15420159	064 Header 2R SM 10W	4.26
15420160	064 Header 2R SM 10W	4.26
15420161	064 Header 2R SM 10W	4.26
15420162	064 Header 2R SM 12W	4.28
15420163	064 Header 2R SM 12W	4.28
15420164	064 Header 2R SM 12W	4.28
15420165	064 Header 2R SM 12W	4.28
15420166	064 Header 2R SM 12W	4.28
15420167	064 Header 2R SM 12W	4.28
15420168	064 Header 2R SM 16W	4.30
15420169	064 Header 2R SM 16W	4.30
15420170	064 Header 2R SM 16W	4.30
15420171	064 Header 2R SM 16W	4.30
15420172	064 Header 2R SM 16W	4.30
15420173	064 Header 2R SM 16W	4.30
15422562	Connector Assembly 14M GT Mixed 150, 280 Sealed	1.30
15422816	064 Header 2R CM 40W	4.38
15422817	064 Header 2R CM 42W	4.40
15422818	064 Header 2R CM 44W	4.42
15422819	064 Header 2R CM 48W	4.44
15423524	Convenience Center	7.10
15423672	064 Header 2R CM 42W	4.41
15423673	064 Header 2R CM 44W	4.43
15423674	064 Header 2R CM 48W	4.45
15423679	064 Header 2R CM 40W	4.39
15423681	064 Header 2R CM 32W	4.36
15423682	064 Header 2R CM 32W	4.37
15423716	064 Header 2R SM 8W	4.25
15423717	064 Header 2R SM 8W	4.25
15423718	064 Header 2R SM 8W	4.25
15423719	064 Header 2R SM 8W	4.25
15423720	064 Header 2R SM 8W	4.25
15423721	064 Header 2R SM 8W	4.25
15423722	064 Header 2R SM 10W	4.27
15423723	064 Header 2R SM 10W	4.27
15423724	064 Header 2R SM 10W	4.27
15423725	064 Header 2R SM 10W	4.27
15423726	064 Header 2R SM 10W	4.27
15423727	064 Header 2R SM 10W	4.27
15423728	064 Header 2R SM 12W	4.29
15423729	064 Header 2R SM 12W	4.29
15423730	064 Header 2R SM 12W	4.29
15423731	064 Header 2R SM 12W	4.29
15423732	064 Header 2R SM 12W	4.29
15423733	064 Header 2R SM 12W	4.29
15423734	064 Header 2R SM 16W	4.31
15423736	064 Header 2R SM 16W	4.31
15423737	064 Header 2R SM 16W	4.31
15423738	064 Header 2R SM 16W	4.31
15423739	064 Header 2R SM 16W	4.31
15427170	Clip (Self-Locking)	9.14
15429805	Micro64 2R 16F	4.62
15429806	Micro64 2R 16F	4.62
15429807	Micro64 2R 16F	4.62
15429808	Micro64 2R 16F	4.62
15429809	Micro64 2R 16F	4.62
15430291	064 Header 2R CM 16W	4.33
15430292	064 Header 2R CM 16W	4.32
15431080	Micro64 2R 10F w/CPA	4.61
15431081	Micro64 2R 10F w/CPA	4.61
15433830	Micro64 10F Secondary Lock	4.61
15435155	Lamp Socket Wedge Base W3	6.5
15435923	064 Header 2R CM 24W	4.34
15437441	064 Header 2R CM 24W	4.35
15439875	Clip	9.14
15443822	Connector 38F GT 150, 280 Sealed	1.41
15445756	Stabilizer 40M GT	1.37
15445904	MicroHVT Female Terminal	4.59
15445905	MicroHVT Female Terminal	4.59
15449028	Connector Assembly 2F GT 150 Sealed	1.11
15459504	064 Header 2R CM 64W	4.47
15459505	064 Header 2R CM 64W	4.46
15459912	Connector Assembly 12F GT 150	1.5

Peters de Laet
503-661-5088 – phone 503-661-5328 – fax
www.pdel.com

Part #	Description	Page
15459913	Connector Assembly 12M GT 150	1.5
15459914	Connector Assembly 8F GT 280	1.17
15459916	Connector Assembly 8M GT 280	1.17
15459917	Connector Assembly 10M GT 150	1.5
15459918	Connector Assembly 10F GT 150	1.5
15460171	GT 150 Female Connector Assembly Sealed USCAR	1.6
15462823	064 Header 1R SM 4W	4.9
15462824	064 Header 1R SM 4W	4.9
15462825	064 Header 1R SM 4W	4.9
15462826	064 Header 1R SM 4W	4.9
15462827	064 Header 1R SM 4W	4.9
15462828	064 Header 1R SM 4W	4.9
15462829	064 Header 1R SM 5W	4.11
15462830	064 Header 1R SM 5W	4.11
15462831	064 Header 1R SM 5W	4.11
15462832	064 Header 1R SM 5W	4.11
15462833	064 Header 1R SM 5W	4.11
15462834	064 Header 1R SM 5W	4.11
15462835	064 Header 1R SM 6W	4.13
15462836	064 Header 1R SM 6W	4.13
15462837	064 Header 1R SM 6W	4.13
15462838	064 Header 1R SM 6W	4.13
15462839	064 Header 1R SM 6W	4.13
15462840	064 Header 1R SM 6W	4.13
15462841	064 Header 1R SM 7W	4.15
15462842	064 Header 1R SM 7W	4.15
15462843	064 Header 1R SM 7W	4.15
15462844	064 Header 1R SM 7W	4.15
15462845	064 Header 1R SM 7W	4.15
15462846	064 Header 1R SM 7W	4.15
15462847	064 Header 1R SM 8W	4.17
15462848	064 Header 1R SM 8W	4.17
15462849	064 Header 1R SM 8W	4.17
15462850	064 Header 1R SM 8W	4.17
15462851	064 Header 1R SM 8W	4.17
15462852	064 Header 1R SM 8W	4.17
15462854	064 Header 1R SM 4W	4.8
15462855	064 Header 1R SM 4W	4.8
15462856	064 Header 1R SM 4W	4.8
15462857	064 Header 1R SM 4W	4.8
15462858	064 Header 1R SM 4W	4.8
15462859	064 Header 1R SM 4W	4.8
15462860	064 Header 1R SM 5W	4.10
15462861	064 Header 1R SM 5W	4.10
15462862	064 Header 1R SM 5W	4.10
15462863	064 Header 1R SM 5W	4.10
15462864	064 Header 1R SM 5W	4.10
15462865	064 Header 1R SM 5W	4.10
15462866	064 Header 1R SM 6W	4.12
15462867	064 Header 1R SM 6W	4.12
15462868	064 Header 1R SM 6W	4.12
15462869	064 Header 1R SM 6W	4.12
15462870	064 Header 1R SM 6W	4.12
15462871	064 Header 1R SM 6W	4.12
15462872	064 Header 1R SM 7W	4.14
15462873	064 Header 1R SM 7W	4.14
15462874	064 Header 1R SM 7W	4.14
15462875	064 Header 1R SM 7W	4.14
15462876	064 Header 1R SM 7W	4.14
15462877	064 Header 1R SM 7W	4.14
15462878	064 Header 1R SM 8W	4.16
15462879	064 Header 1R SM 8W	4.16
15462880	064 Header 1R SM 8W	4.16
15462881	064 Header 1R SM 8W	4.16
15462882	064 Header 1R SM 8W	4.16
15462883	064 Header 1R SM 8W	4.16
15464948	064 Header 2R CM Mix Radio 30W	4.49
15466325	GT 150 Female Connector Assembly Sealed	1.6
15466671	GT 280 Female Connector Assembly Unsealed	1.14
15470809	Seal Cable	9.9
15475869	Connector 40M GT 150	1.37
15475870	Connector 40M GT 150	1.37
15476196	GT 280 Female Connector Assembly Sealed	1.18
15476197	GT 280 Female Connector Assembly Sealed	1.18
15476198	GT 280 Female Connector Assembly Sealed	1.18
15476199	GT 280 Female Connector Assembly Sealed	1.18
15477027	MicroHVT 2R 12F	4.57
15477037	MicroHVT 12F Secondary Lock	4.57
15479020	Connector 4F M/P 280	2.27
15479022	Connector 6F M/P 280	2.27
15479266	Micro64 2R 10F	4.61
15479267	Micro64 2R 10F	4.61
15480081	Micro64 2R 8F	4.60
15480082	Micro64 2R 8F	4.60
15483208	MicroHVT 2R 12F w/CPA	4.57
15485094	Lamp Socket Wedge Base W3	6.5
15487755	Connector Assembly 4M GT 150 Sealed	1.8
15487756	Connector Assembly 4F GT 150 Sealed	1.8
15488824	Stabilizer 40M GT 150, 280	1.41
15489152	GT 280 Female Connector Assembly Unsealed	1.14
15489154	GT 280 Female Connector Assembly Unsealed	1.14
15489156	GT 280 Female Connector Assembly Unsealed	1.14
15491547	Connector Assembly 3F GT 150 Sealed	1.11
15492508	Battery Bolt	9.6
15492510	Battery Bolt	9.6
15492518	Connector Assembly 42F M/P 280,480,630	2.84
15492519	Connector Assembly 25M M/P 280,480,630	2.84
15492521	Connector Assembly 22M W/P	6.21
15492531	Connector Assembly 22F W/P	6.21
15492542	Connector Assembly 30F M/P 150 Pull-To-Seat	2.101
15492543	Connector Assembly 30F M/P 150 Pull-to-Seat	2.102
15492546	Connector Assembly 18F M/P 150 Pull-To-Seat	2.100
15492553	Connector Assembly 30F M/P 150 Pull-To-Seat Sealed	2.100
15492558	Connector Assembly 56M M/P 280, 480, 630	2.85
15492562	Connector Assembly 36M 150, 280, 480, 630	2.94
15492567	Connector Assembly 30F M/P 280, 480 Sealed	2.93
15492591	Connector Assembly 36F M/P, 150, 280, 480, 630	2.94
15492601	Connector Assembly 78F M/P 150, 280, 630 Sealed	2.96
15492611	Assembly Terminal M/P 800 & Bus Stud	7.19
15492622	Connector Assembly 116F M/P 150, 280	2.86
15492642	Connector Assembly 38F M/P 280, 630	2.95
15492654	Connector Mega Fuse	7.29
15492655	Assembly Cap 12M M/P 280 Splice Saver	6.12
15492657	Connector Assembly 116M M/P 150, 280	2.86
15492672	Connector Assembly 56F M/P 280/480/630	2.85
15492996	Seal Cable	9.9
15495959	Latch	7.8
15496639	064 Header 2R SM 16W	4.31
15497399	GT 150 Female Connector Assembly	1.6
15498985	Connector Assembly 78M M/P 150, 280, 630	2.96
15499926	MicroHVT 1R 6F	4.52
15499927	MicroHVT 1R 6F w/CPA	4.52
PE101003	MicroHVT 16F Secondary Lock	4.58
PE101938	MicroHVT 8F Secondary Lock	4.55
PE102004	MicroHVT 1R 5F	4.51
PE102005	MicroHVT 1R 5F	4.51
PE102006	MicroHVT 1R 5F	4.51
PE102007	MicroHVT 1R 5F	4.51
PE102008	MicroHVT 1R 5F	4.51
PE102009	MicroHVT 1R 5F	4.51
PE102012	MicroHVT 1R 6F	4.52
PE102013	MicroHVT 1R 6F	4.52
PE102014	MicroHVT 1R 6F	4.52
PE102015	MicroHVT 1R 6F	4.52
PE102016	MicroHVT 1R 6F	4.52
PE102018	MicroHVT 1R 7F	4.53
PE102019	MicroHVT 1R 7F	4.53
PE102020	MicroHVT 1R 7F	4.53
PE102021	MicroHVT 1R 7F	4.53
PE102022	MicroHVT 1R 7F	4.53
PE102023	MicroHVT 1R 7F	4.53
PE102025	MicroHVT 2R 10F	4.56
PE102026	MicroHVT 2R 10F	4.56
PE102027	MicroHVT 2R 10F	4.56
PE102028	MicroHVT 2R 10F	4.56
PE102029	MicroHVT 2R 10F	4.56
PE102030	MicroHVT 2R 10F	4.56
PE102033	MicroHVT 2R 12F	4.57
PE102034	MicroHVT 2R 12F	4.57
PE102035	MicroHVT 2R 12F	4.57
PE102036	MicroHVT 2R 12F	4.57
PE102037	MicroHVT 2R 12F	4.57
PE102090	MicroHVT 5F Secondary Lock	4.51
PE102092	MicroHVT 7F Secondary Lock	4.53
PE102094	MicroHVT 10F Secondary Lock	4.56
PE107546	MicroHVT 1R 4F w/CPA	4.50
PE107547	MicroHVT 1R 4F w/CPA	4.50
PE107548	MicroHVT 1R 4F w/CPA	4.50
PE107549	MicroHVT 1R 4F w/CPA	4.50
PE107551	MicroHVT 1R 5F w/CPA	4.51
PE107552	MicroHVT 1R 5F w/CPA	4.51
PE107553	MicroHVT 1R 5F w/CPA	4.51
PE107554	MicroHVT 1R 5F w/CPA	4.51
PE107555	MicroHVT 1R 5F w/CPA	4.51
PE107556	MicroHVT 1R 5F w/CPA	4.51
PE107558	MicroHVT 1R 6F w/CPA	4.52
PE107559	MicroHVT 1R 6F w/CPA	4.52
PE107560	MicroHVT 1R 6F w/CPA	4.52
PE107561	MicroHVT 1R 6F w/CPA	4.52
PE107562	MicroHVT 1R 6F w/CPA	4.52
PE107563	MicroHVT 1R 7F w/CPA	4.53
PE107564	MicroHVT 1R 7F w/CPA	4.53
PE107565	MicroHVT 1R 7F w/CPA	4.53
PE107566	MicroHVT 1R 7F w/CPA	4.53
PE107567	MicroHVT 1R 7F w/CPA	4.53
PE107568	MicroHVT 1R 7F w/CPA	4.53
PE107570	MicroHVT 1R 8F w/CPA	4.54
PE107571	MicroHVT 1R 8F w/CPA	4.54

Peters de Laet
503-661-5088 – phone 503-661-5328 – fax
www.pdel.com

Part #	Description	Page
PE107572	MicroHVT 1R 8F w/CPA	4.54
PE107573	MicroHVT 1R 8F w/CPA	4.54
PE107574	MicroHVT 1R 8F w/CPA	4.54
PE107576	MicroHVT 2R 8F w/CPA	4.55
PE107577	MicroHVT 2R 8F w/CPA	4.55
PE107578	MicroHVT 2R 8F w/CPA	4.55
PE107579	MicroHVT 2R 8F w/CPA	4.55
PE107580	MicroHVT 2R 8F w/CPA	4.55
PE107581	MicroHVT 2R 8F w/CPA	4.55
PE107582	MicroHVT 2R 10F w/CPA	4.56
PE107583	MicroHVT 2R 10F w/CPA	4.56
PE107584	MicroHVT 2R 10F w/CPA	4.56
PE107585	MicroHVT 2R 10F w/CPA	4.56
PE107586	MicroHVT 2R 10F w/CPA	4.56
PE107587	MicroHVT 2R 10F w/CPA	4.56
PE107589	MicroHVT 2R 12F w/CPA	4.57
PE107590	MicroHVT 2R 12F w/CPA	4.57
PE107591	MicroHVT 2R 12F w/CPA	4.57
PE107592	MicroHVT 2R 12F w/CPA	4.57
PE107593	MicroHVT 2R 12F w/CPA	4.57
PE107600	MicroHVT 2R 16F w/CPA	4.58
PE107601	MicroHVT 2R 16F w/CPA	4.58
PE107602	MicroHVT 2R 16F w/CPA	4.58
PE107603	MicroHVT 2R 16F w/CPA	4.58
PE107604	MicroHVT 2R 16F w/CPA	4.58
PE107605	MicroHVT 2R 16F w/CPA	4.58
PE107849	MicroHVT 1R 4F	4.50
PE107850	MicroHVT 1R 4F	4.50
PE107851	MicroHVT 1R 4F	4.50
PE107852	MicroHVT 1R 4F	4.50
PE107855	MicroHVT 1R 8F	4.54
PE107856	MicroHVT 1R 8F	4.54
PE107857	MicroHVT 1R 8F	4.54
PE107858	MicroHVT 1R 8F	4.54
PE107859	MicroHVT 1R 8F	4.54
PE107861	MicroHVT 2R 8F	4.55
PE107862	MicroHVT 2R 8F	4.55
PE107863	MicroHVT 2R 8F	4.55
PE107864	MicroHVT 2R 8F	4.55
PE107866	MicroHVT 2R 8F	4.55
PE107867	MicroHVT 2R 8F	4.55
PE107868	MicroHVT 2R 16F	4.58
PE107869	MicroHVT 2R 16F	4.58
PE107870	MicroHVT 2R 16F	4.58
PE107871	MicroHVT 2R 16F	4.58
PE107872	MicroHVT 2R 16F	4.58
PE107873	MicroHVT 2R 16F	4.58
PE108483	064 Header 2R CM Mix Radio 46W	4.49
PE114929	064 Header 2R CM Mix Amplified 40W	4.48
PE116301	064 Header 1R CM 24W	4.20
PE116303	064 Header 1R CM 24W	4.21
PE119310	064 Header 1R CM 16W	4.19
PE119312	064 Header 1R CM 16W	4.18
PE119314	064 Header 1R CM 32W	4.23
PE119316	064 Header 1R CM 32W	4.22
PE132123	064 Header 1R SM 12W	4.16

Peters de Laet
503-661-5088 – phone 503-661-5328 – fax
www.pdel.com

Peters de Laet
503-661-5088 – phone 503-661-5328 – fax
www.pdel.com

Peters de Laet
503-661-5088 – phone 503-661-5328 – fax
www.pdel.com